FOR OFFICIAL USE ONLY

Hammerhead Crane Study

Facility Number 448

Naval Facilities Engineering Command-Midlant PWD - Portsmouth

Norfolk Naval Shipyard

Portsmouth, Virgina

STV 100 Years

Contract Number: N40085-11-D-7211-0005
eProjects Work Order: 1171836

FOR OFFICIAL USE ONLY

HAMMERHEAD CRANE STUDY
FACILITY NUMBER 448

Norfolk Naval Shipyard
Portsmouth, Virginia

for

NAVAL FACILITIES ENGINEERING COMMAND-MIDLANT
PWD - Portsmouth

By

eProjects Work Order: 1171836
Contract Number: N40085-11-D-7211-0005

STV Project No.: 30-15783

HAMMERHEAD CRANE STUDY
FACILITY NUMBER 448

Norfolk Naval Shipyard
Portsmouth, Viriginia

AUGUST 2013

TABLE OF CONTENTS

1. EXECUTIVE SUMMARY 1

2. INTRODUCTION 2

2.1. VICINITY MAPS 2
2.2. PURPOSE AND ORGANIZATION OF STUDY 3
2.3. SCOPE OF STUDY 3
2.4. HISTORY OF THE CRANE 4
2.5. METHODS AND TECHNIQUES 5
2.5.1. Document Recovery and Evaluation 5
2.5.2. Boom 6
2.5.3. Tower 6
2.5.4. Foundation 8
2.5.5. Safety 8
2.5.6. ACM Sampling and Analytical Protocol 8
2.5.7. Limited Lead-Containing Paint Survey 9
2.5.8. Limited Universal Waste Survey 10
2.5.9. History and Archeology 10
2.5.10. Cost Estimate 10
2.5.11. Present Value (Life Cycle Cost Analysis) 11
2.5.12. Schedule 11

3. DESCRIPTION 12

3.1. CRANE 12
3.2. SIGNIFICANT CONSTRUCTION, MODIFICATIONS AND REPAIRS 15

4. SITE FINDINGS 16

4.1. STRUCTURAL/MECHANICAL/ELECTRICAL 16
4.1.1. 350 Long Ton (LT) Crane Boom 16
4.1.2. Tower 17
4.1.3. Foundation 22
4.1.4. 15 Long Ton (LT) Crane 23
4.1.5. 25 Short Ton (ST) Service Crane 24
4.2. SAFETY ISSUES 25
4.3. HAZARDOUS MATERIALS FINDINGS 28
4.4. SITE AND SUPPORTING UTILITIES 29
4.4.1. Plumbing 29
4.4.2. Fire Protection 29
4.4.3. Steam and Steam Meter 29
4.4.4. Fiber Optic 30

5. ANALYSIS 31

5.1. BASIS OF ANALYSIS 31
5.2. STRUCTURAL ANALYSIS 31
5.2.1. 350 LT Crane Boom 31
5.2.2. Tower 32
5.2.3. Foundation 34
5.2.4. 15 LT Crane 35

6. ALTERNATIVES 36

6.1. MOTHBALL ALTERNATIVE 36
6.1.1. Basis of Preservation 36
6.1.2. Mothball Approach 36
6.1.3. Recommended Actions 39
6.1.4. Estimate of Reasonable Cost Summarized 40
6.1.5. Schedule of Design and Construction Summarized 41
6.2. DEMOLITION ALTERNATIVE 42
6.2.1. Basis of Demolition 42
6.2.2. Demolition Approach 42
6.2.3. Recommended Actions 42
6.2.4. Estimate of Reasonable Cost Summarized 43
6.2.5. Schedule of Design and Construction Summarized 44

7. SUMMARY OF STUDY 45

7.1. PURPOSE 45
7.2. CONCLUSIONS 45
7.3. RECOMMENDED ACTIONS 45
7.4. FIRST COST AND LIFE CYCLE COST 45
7.5. SCHEDULE 46

PHOTOGRAPHS

FIGURES & DRAWINGS

GLOSSARY AND ABBREVIATIONS

ATTACHMENTS

Table of Contents

Attachment 1 – Roles and Responsibilities
Attachment 2 – Site Investigation Details
Attachment 3 – Detailed Basis of Analysis
- 3-1 – Boom
- 3-2 – Basis of Design – Tower
  - 3-2-1 – Materials
  - 3-2-2 – Basis of Design Codes
  - 3-2-3 – Basis of Design for Dead and Live
  - 3-2-4 – Basis of Design for Wind
  - 3-2-5 – Basis of Design for Seismic
  - 3-2-6 – ASD Load Combinations Evaluated
  - 3-2-7 – LRFD Load Combinations Evaluated (for Anchor Bolts only)
- 3-3 – Foundation
  - 3-3-1 – Design References: Codes and Standards
  - 3-3-2 – Materials

Attachment 4 – Boom Calculation Details
- 4-1 – Boom Analysis
  - 4-1-1 – Analysis Summary
  - 4-1-2 – Model Overview
  - 4-1-3 – Sections
  - 4-1-4 – Loads
  - 4-1-5 – Reactions & Deflections
  - 4-1-6 – Load Combinations
  - 4-1-7 – Member Buckling Factors
  - 4-1-8 – Member Stress Analysis
  - 4-1-9 – Selected Truss Connection Evaluation
  - 4-1-10 – Roller Loads
  - 4-1-11 – Tread & Pinion Girder Evaluations
  - 4-1-12 – Spud Lock Assembly Evaluation
  - 4-1-13 – King Pin Assembly Evaluation
  - 4-1-14 – Machinery House Framing
- 4-2 – Supporting Documentation
  - 4-2-1 – AISC Historic Rolled Shapes
  - 4-2-2 – Materials References

Attachment 5 – Boom to Tower Interface Loads
5-1 – Discussion and Summary
5-2 – Calculated Boom Loads
5-3 – Roller Forces
5-3-1 – Calculated
5-3-2 – Original Design Calculations
Attachment 6 – Tower Calculation Details
6-1 – Finite Element Analysis Model
6-1-1 – RISA-3D™ Model
6-1-2 – RISA-3D™ Model Loadings
6-1-3 – RISA-3D™ Model Graphical Deflections
6-1-4 – RISA-3D™ Model Code Checks
6-2 – Tower Base Analysis
6-2-1 – Anchor Bolt Capacity
6-2-2 – Column Base Code Check
6-3 – Slew Ring Structural Analysis
6-4 – Original Construction Arrangement Drawings
Attachment 7 – Tower to Foundation Interface Loads
7-1 – Tower Loads to the Foundation
7-2 – Re-Orientation of Loads for Analysis of Foundation
Attachment 8 – Foundation
8-1 – General Foundation Information
8-1-1 – Crane Foundation Description
8-1-1-1 – Concrete Structure
8-1-1-2 – Pile Foundation
8-1-2 – Existing Condition Determination
8-1-2-1 – Concrete
8-1-2-2 – Timber Piles
8-2 – Foundation Analysis and Results
8-2-1 – Computer Model
8-2-1-1 – Software
8-2-1-2 – Foundation Modeling for Pile Analysis (Model 1)
8-2-1-2-1 – Concrete Cap
8-2-1-2-2 – Timber Piles
8-2-1-2-2-1 – Axial Stiffness
8-2-1-3 – Foundation Modeling for Concrete Cap Analysis (Model 2)
8-2-2 – Loads
8-2-2-1 – Dead Load
8-2-2-2 – Wind Load
8-2-2-3 – Earthquake Load
8-2-3 – Load Combinations
8-2-4 – Analysis Results
8-2-4-1 – Concrete Cap
8-2-4-2 – Timber Piles
8-2-5 – Conclusion
8-3 – Selected Drawings of Existing Foundation

8-4 – Foundation Calculation Details
8-4-1 – Design Criteria
8-4-1-1 – Design Codes and References
8-4-1-2 – Material Properties & Other Considerations
8-4-1-3 – Loads
8-4-1-4 – Load Combinations
8-4-2 – Timber Pile Analysis
8-4-3 – Stability Analysis of the Foundation
8-4-3-1 – Foundation Stability
8-4-3-2 – Compression Load on Piles
(Assuming Piles have No Tensile Capacity)
8-4-4 – Concrete Cap Analysis
8-4-4-1 – Checking Flexural and Sheer Strength
8-4-4-2 – Checking Bearing Stress under the Columns
8-4-5 – SAP2000 Analysis Output
8-4-5-1 – Pile Forces – 1” Diameter Degradation
8-4-5-2 – Pile Forces – 2” Diameter Degradation
8-4-5-3 – Concrete Cap
8-5 – Foundation Model Using Solid Elements
8-5-1 – Model Geometry
8-5-1-1 – Joint Coordinates
8-5-1-2 – Joint Restraints
8-5-1-3 – Element Connectivity
8-5-2 – Material Properties
8-5-3 – Section Properties
8-5-3-1 – Frames
8-5-3-2 – Areas
8-5-3-3 – Solids
8-5-4 – Load Patterns
8-5-4-1 – Definitions
8-5-5 – Load Cases
8-5-5-1 – Definitions
8-5-5-2 – Static Case Load Assignments
8-5-5-3 – Response Spectrum Case Load Assignments
8-5-6 – Load Combinations
8-5-7 – Material Take-Off
8-5-8 – Design Preferences
8-5-8-1 – Steel Design
8-5-8-2 – Concrete Design
8-5-8-3 – Aluminum Design
8-5-8-4 – Cold Formed Design
8-6 – Foundation Model Used for Capping Beam Analysis
8-6-1 – Model Geometry
8-6-1-1 – Joint Coordinates
8-6-1-2 – Joint Restraints
8-6-1-3 – Element Connectivity

8-6-2 – Material Properties
8-6-2-1 – Section Properties
8-6-3 – Load Patterns
8-6-3-1 – Definitions
8-6-4 – Load Cases
8-6-4-1 – Definitions
8-6-4-2 – Static Case Load Assignments
8-6-4-3 – Response Spectrum Case Load Assignments
8-6-5 – Load Combinations
8-6-6 – Material Take-Off
8-6-7 – Design Preferences
8-6-7-1 – Steel Design
8-6-7-2 – Concrete Design
8-6-7-3 – Aluminum Design
8-6-7-4 – Cold Framed Design
Attachment 9 – 15 Long Ton Crane
9-1 – Analysis Summary
9-2 – Reference Drawings
9-3 – Loads
9-4 – Base Reactions and Stability
9-5 – Translate Spud Lock Assembly Evaluation
9-6 – Rotate Spud Lock Assesmbly Evaluation
9-7 – King Pin Assembly Evaluation
Attachment 10 – Project Alternatives, Cost, Life Cycle Cost Analysis, Schedule
10-1 – Mothball Alternative
10-1-1 – Cost Details
10-1-2 – Life Cycle Cost Analysis
10-1-3 – Schedule Details
10-1-4 – Alternative Details
10-2 – Demolition Alternative
10-2-1 – Cost Details
10-2-2 – Life Cycle Cost Analysis
10-2-3 – Schedule Details
10-2-4 – Alternative Details
10-3 – Cost Summary
Attachment 11 – Detailed List of Salvageable Materials and Machinery
11-1 – Base Mounted Winches
11-1-1 – 350 LT Hammerhead Hoist Assembly A & B
11-1-2 – 350 LT Hammerhead Hoist Assembly C
11-1-3 – 15 LT Revolving Crane Hoist Assembly
11-2 – Motor – Generator Set
11-3 – Hook Blocks
11-3-1 – A and B Blocks
11-3-2 – C Block
11-3-3 – 15 Ton Revolver Block
11-4 – Slip Ring Assemblies

11-4-1 – 350 LT Hammerhead Crane Slip Ring Assembly
11-4-2 – 15 LT Revolver Crane Slip Ring Assembly
11-4-3 – 25 ST Service Crane
11-4-4 – 15 LT Revolver Crane Festoon System
11-4-5 – 350 LT Hammerhead Operator's Cab
11-4-6 – 15 LT Revolver Operator's Cab
11-5 – Sheaves
11-5-1 – Sheaves – Quantity 24
11-5-2 – Fixed Support Sheaves – Quantity 18
11-5-3 – Fleeting Support Sheaves – Quantity 6
Attachment 12 – Matrix of Permit Agencies
12-1 – Natural Resources of Concern
12-2 – VaFWIS Initial Project Assessment
12-3 – Removal or Relocation of Osprey Nests in Virginia
12-4 – Matrix of Permit Agencies
Attachment 13 – Cultural Resource Documentation
13-1 – Historic Narrative – Norfolk Naval Shipyard
13-2 – Historical Documentary Photographs
Photograph 1 – Hammerhead Crane (date unknown)
Photograph 2 – Heyl & Patterson Advertisement (1942)
Photograph 3 – Hammerhead Crane and the USS Missouri (1952)
Photograph 4 – Hammerhead Crane (1958)
Photograph 5 – Hammerhead Crane (ca. 1963)
Photograph 6 – Hammerhead Crane (1970)
13-3 – Physical Description – Hammerhead Crane
13-4 – Section 106 Coordination
13-4-1 – Mothball Alternative
13-4-2 – Demolition Alternative
13-5 – Bibliography
Attachment 14 – Limited Hazardous Materials Report
14-1 – Executive Summary
14-2 – Background
14-3 – ACM Sampling and Analytical Protocol
14-3-1 – Survey Procedures – General
14-3-2 – Sampling Protocol
14-3-2-1 – Sample Locations
14-3-2-2 – Sampling Methods
14-3-3 – Analytical Protocol
14-4 – ACM Findings
14-4-1 – Surfacing Material
14-4-2 – Thermal System Insulation
14-4-3 – Miscellaneous Materials
14-4-4 – Inaccessible Suspect ACM
14-5 – Lead-Containing Paint Survey
14-5-1 – Lead-Containing Paint Survey Methodology
14-6 – Limited Universal Waste Survey

14-6-1 – Universal Waste Survey Methodology
14-7 – Findings and Conclusions
14-7-1 – Asbestos Containing Materials Findings
14-7-1-1 – Asbestos Containing Materials Recommendations
14-7-2 – Lead Containing Paint Findings
14-7-3 – Universal Waste Survey Findings
14-8 – Assumptions and Limitations
14-9 – Bulk Material Sampling Analytical Results
14-10 – Sample Location Plan
14-11 – Inspection Summary Tables
Table 14-11-1 – Summary of Limited Asbestos Analytical Results
Table 14-11-2 – Summary of Positive Asbestos Bulk Sample Results
Table 14-11-3 – Summary of Limited Lead-Containing Paint Analytical Results
Table 14-11-4 – Summary of Positive Lead-Containing Paint Sample Results
Table 14-11-5 – Summary of Suspect Universal Waste with Locations
14-12 – Photograph Log
14-13 – Homogenous Area Forms
Attachment 15 – Existing Documents
15-1 – List of Existing Drawings
15-2 – List of Documents Other Than Drawings and Sketches

1. EXECUTIVE SUMMARY

The Hammerhead Crane, Facility Number 448, at Norfolk Naval Shipyard (NNSY), Portsmouth, Virginia is in adequate structural condition to be mothballed with no future use. There is no current or planned mission for NNSY or tenant activities to use the crane.

Near term repairs are required to provide safe access for annual maintenance, and to reduce the risk of falling debris during the mothball period, or until a different decision is made for the future of the Hammerhead crane. The initial cost of near term repairs is $534,594. A construction-type, temporary crane of sufficient capacity, reach and elevation to serve the entire Hammerhead crane is not necessary for near term repairs, and the cost is more than the value of the equipment and components available for selective salvage. Therefore, it is not economically feasible to sell useable equipment and components to partially offset the cost of repairs. The life cycle cost of mothballing the Hammerhead crane is $771,673 based upon a 20 year period. The estimated duration to place the crane in mothball condition is approximately 40 months.

The Hammerhead Crane can be demolished and components salvaged for sale, use or display. The cost of demolishing the Hammerhead crane is approximately $1,736,773. A construction-type crane of sufficient capacity, reach and elevation will temporarily be required to take down the Hammerhead crane. The structural steel can be recycled to partially offset the cost of demolition. Salvage of components can also be used to partially offset the cost of demolition because the construction-type crane will be on site anyway, and the components will be removed to reduce the weight lifted at any one time. The estimated duration to demolish the crane is approximately 45 months.

The difference between the Life Cycle Costs of the two alternatives over a 20 year period is $965,100. The difference is significant but should be considered in concert with the risk factors identified below, the rough order of magnitude estimates performed, and the uncertainties of future cost escalation.

The primary sources of risk associated with the crane's future are:

- Future funding of preparation for mothball status, annual maintenance over a 20 year life, significant repairs in approximately 20 years, or demolition.

- The actual condition of the timber piles in the foundation.

- Short term safety issues associated with personnel access, and lifting and handling heavy loads at heights of over 200 feet.

- Resistance by local, state or Federal historical interests to demolition or any significant change in the crane.

2. INTRODUCTION

2.1. VICINITY MAPS

Norfolk Naval Shipyard (NNSY) is located in Portsmouth, Virginia across the Southern Branch of the Elizabeth River from Norfolk, Virginia.

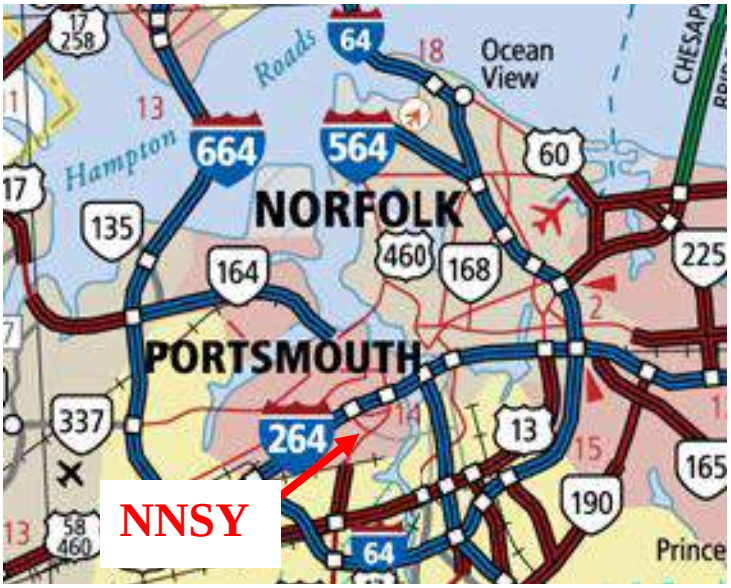

Figure 2.1 - Norfolk Naval Shipyard is Located in Portsmouth, Virginia

The Hammerhead Crane, Facility 448 is near the northern end of the Norfolk Naval Shipyard. It stands between Building 262 and Berth 2 on the Southern Branch of the Elizabeth River.

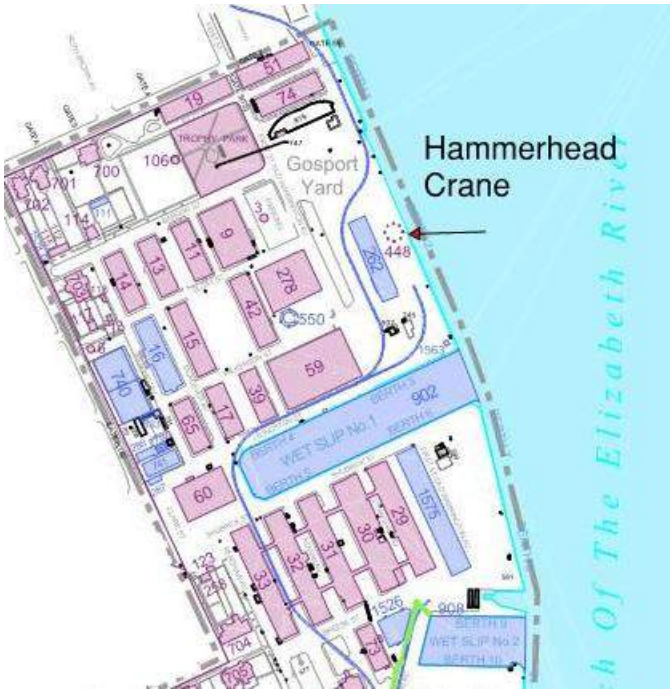

Figure 2.2 - Hammerhead Crane Location

2.2. PURPOSE AND ORGANIZATION OF STUDY

The purpose of this study is to provide the Naval Facilities Engineering Command (NAVFAC) with sufficient information to choose between placing the Hammerhead Crane in a mothball state or demolishing it. For the purposes of this study, the definition of mothball includes "…not for future use."

The report is organized into a narrative section that describes the work performed supported by 15 attachments. Report topics are generally organized by major crane systems and components – boom, tower, foundation, 15-LT crane and 25 ST service crane. Discussion points within topics are further divided by disciplines (structural, mechanical, electrical and support utilities) and risk assessment factors such as safety, hazardous materials, cost, schedule and cultural/historical significance.

2.3. SCOPE OF STUDY

The Scope of the Study is established by Statement of Architect-Engineer Services, Statement of Work. The Summary of Services includes Basis of Design (Basis of Analysis), Calculations, Cost Estimate, Field Investigations, Cultural Resource Archeological Investigations, Survey, Photographs, Studies, Hazardous Material Surveys and Drawings. Note that the details of the specific requirements of paragraphs 4 and 5 of the Scope of Work distinguished between standard items included at Summary of Services and those applicable to this study.

2.4. HISTORY OF THE CRANE

Between 1938 and 1945, under a comprehensive plan for the improvement of the US Naval facilities, a total of $590 million was spent to upgrade and expand navy yards throughout the United States. For the Norfolk Navy Yard, as it was then known, the approach to World War II meant a great leap forward in ship construction and repair as well as the fitting out of ships and vessels built in local civilian yards.

Early in 1938, to provide the means to allow for the anticipated heavy new construction, a Norfolk Navy Yard memorandum identified the need for a plant to construct battleship turrets. The Turret Plant as it was named was constructed in the northern portion of the navy yard in what was then known as North Landing and included three adjacent structures: a Turret Assembly Building, Turret Welding Shop and the 350-ton Hammerhead Crane.

During the war years, the shipyard witnessed the building of 101 naval vessels; work was completed on approximately 6,850 US and Allied ships. The ships constructed and repaired at the Norfolk Navy Yard enabled a United States Navy crippled by the December 1941 attack on Pearl Harbor to recover from defeat, play a major role in the destruction of the Axis Powers and secure an Allied victory.

The Hammerhead Crane (Facility 448) is a contributing resource to the Norfolk Naval Shipyard Historic District, which has been determined eligible for listing in the National Register of Historic Places.

Photographs of the Hammerhead Crane may be found behind the Photograph Divider which immediately follows this report. Site mapping and construction plans are located in the Figures and Drawings Divider.

This narrative is a summary of a more comprehensive history of the Hammerhead Crane and the Norfolk Naval Yard which may be found in Attachment 13 Cultural Resource Documentation.

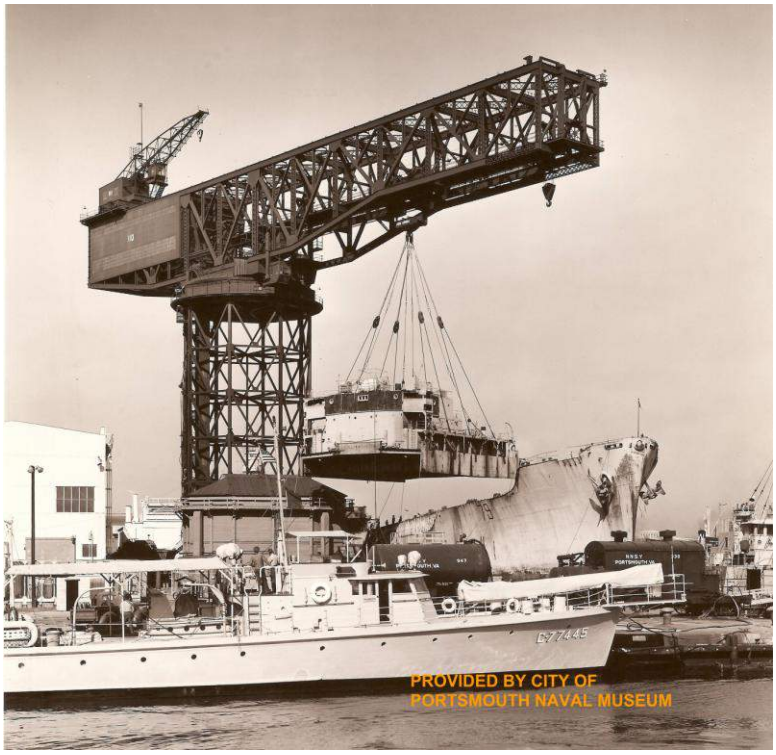

Figure 2.3 - Hammerhead Crane – November 1947

This photograph represents what is thought to be the largest load ever lifted by a crane on the East Coast. The entire bridge structure from an old liberty ship was lifted and lowered onto the stripped hull of a converted escort carrier. The Hammerhead Crane was built in 1940 and is no longer in operation. (Official U.S. Navy Photograph)

2.5. METHODS AND TECHNIQUES

2.5.1. Document Recovery and Evaluation

A document recovery process was performed in coordination with NAVFAC personnel. NAVFAC supplied construction documents and contract and report information in their possession. The construction documents included most of the original drawings from American Bridge Company, who designed and built the structure, and Heyl and Patterson who was responsible for mechanical, electrical, and architectural systems, as well as the 15 Long Ton (LT) piggyback crane. Another large collection of drawings was provided from a 1980-1982 project by Heyl and Patterson to conduct large-scale upgrade and maintenance on the crane.

Other miscellaneous drawings were provided, some by contractors and some by in-house Navy engineering personnel, representing various minor maintenance projects throughout the crane's lifetime. Repair orders, operating instructions, and final laying up report documents from the history of the crane were also provided by NAVFAC.

A list of all drawings and documents can be found in Attachment 15.

2.5.2. Boom

The boom structure was analyzed in three dimensions by finite element modeling in Liftech Analysis Suite (LAS) and with hand calculations. The boom was evaluated under dead/gravity loads, wind loads and seismic loads. Other loading conditions (rain, snow, etc.) were determined to be insignificant. All load combinations were evaluated in accordance with ASCE 7-05 provisions. See Attachment 3-1 for detailed basis of analysis and criteria employed.

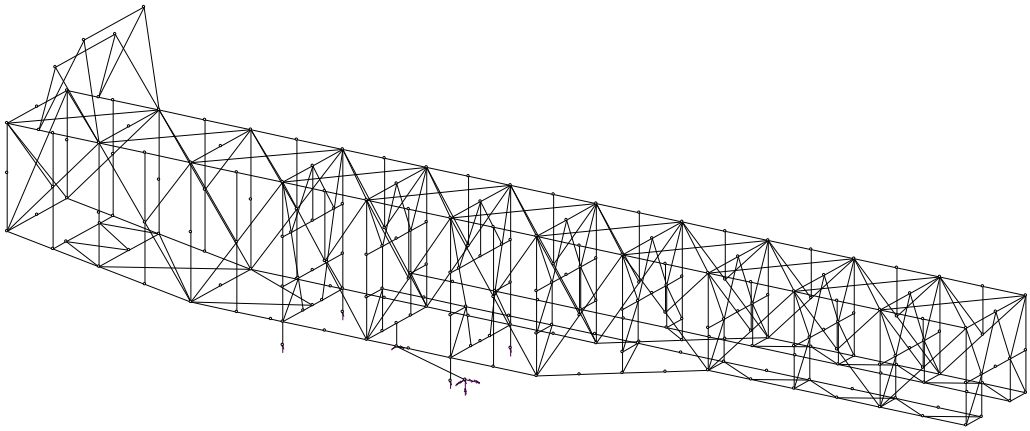

Figure 2.4 - Liftech Analysis Suite Model

2.5.3. Tower

The tower portion of the structure was analyzed with the finite element modeling computer program RISA-3D. The tower was evaluated under dead/gravity loads, wind loads, and seismic loads. Other loading conditions (rain, snow, etc) were determined to be insignificant.

All load combinations were evaluated in accordance with ASCE 7-05 provisions.

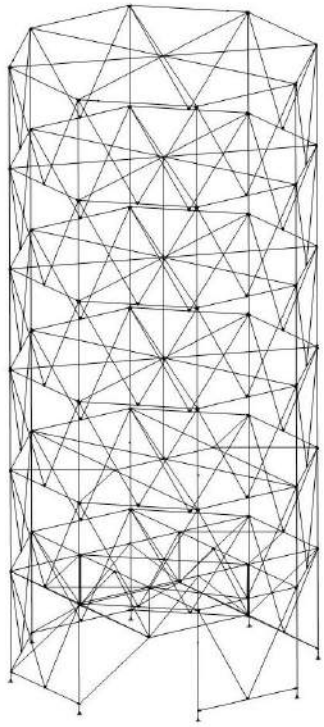

Figure 2.5 - RISA-3D Model of the Tower

(See Attachment 6 for Detailed Graphics of Model)

Vertical loads were applied at the four corners of the boom base, and horizontal loads at the king pin and spud lock.

Loads imparted from the boom to the tower can be found in Attachment 5-1. These loads were then transformed as required, distributing the four vertical loads (via the slew ring girders) to the eight columns, and the horizontal reactions and the king pin and spud lock being resolved into X- and Z- components.

See Attachment 3-2 for detailed criteria used. See Attachment 6 for details of load applications, calculations and results.

2.5.4. Foundation

SAP2000 has been used for foundation analysis. A complete 3-dimension finite element model of the existing foundation was developed using SAP2000 structural analysis program. The foundation was evaluated under dead/gravity loads, wind loads and seismic loads. Other loading conditions (rain, snow, etc.) were determined to be insignificant. All load combinations were evaluated in accordance with provisions of International Building Code (IBC) 2009. See Attachment 3-3 for detailed references and material characteristics. Several Screen shots of the model are shown in Attachment 8-2.

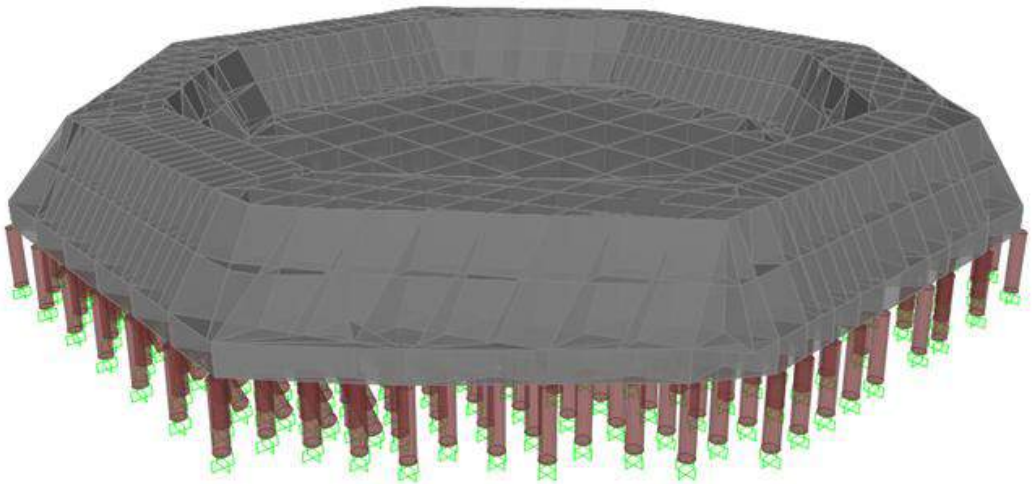

Figure 2.6 - Foundation Model Screen Shot of Vertical and Batter Piles

2.5.5. Safety

A site-specific Health and Safety Plan was developed and implemented. Adequate fall protection was employed by personnel on the crane visited the site to identify likely hazards. Mr. Ganey provided the FALL PROTECTION PLAN previously prepared by NNSY personnel. STV engaged Mr. Dan Brunn, CIH and certified safety trainer, of 1Source, Inc. prior to the Site Investigations to assist in preparation of a safety plan and to identify safety hazardous. Prior to the Site Investigations Mr. Miller and Mr. Brunn assessed the site and adjusted the on-site training accordingly. Specific, suitable locations for temporary lanyard attachments were identified. With oversight by NNSY Safety Personnel, Mr. Brunn conducted on-site training for all those participating in the field investigations.

2.5.6. ACM Sampling and Analytical Protocol

<u>Survey Procedures - General</u>

The asbestos survey was conducted in accordance with the Asbestos Hazard Emergency Response Act (AHERA) guidelines (EPA Regulation 40 CFR Part 763). The number of samples collected was dependent upon the homogeneous area category and the quantity of material

present, using a minimum number of samples, which met the sampling criteria found in 29 CFR 1926.1101.

Analytical Protocol

Bulk samples of suspect ACM were collected at the site and laboratory analysis for asbestos was conducted by AmeriSci Richmond, 13635 Genito Road, Midlothian, VA 23112 utilizing Polarized Light Microscopy (PLM) and Transmission Electron Microscopy (TEM); Lead analysis was performed by Schneider Laboratories, Inc. (see section 5.1). AmeriSci is accredited for PLM analysis by both the American Industrial Hygiene Association (AIHA) and the National Voluntary Laboratory Accreditation Program (NVLAP) (NVLAP Laboratory Code 101904-0 & AIHA Laboratory ID: 100527).

While United States Environmental Protection Agency (USEPA) regulations governing ACM consider materials containing greater than 1 percent as asbestos, accurately quantifying asbestos content below 5-percent has been shown to be unreliable.

Inaccessible Suspect ACM

During the survey, samples were collected if they were readily accessible and could be collected using non-destructive methods. The following portions of the building were not accessible:

- Electrical Wire Insulation (Assumed)
- Electrical Panels (Assumed)
- Roofing Materials (Assumed)
- Exterior Window Caulk (Assumed)

Additional ACMs may be present in inaccessible or concealed spaces. See Attachment 14 for specific recommendations regarding inaccessible or concealed spaces.

2.5.7. Limited Lead-Containing Paint Survey

A limited Lead-Containing Paint (LCP) survey was performed. in the areas to be impacted by the scope of work at the Hammerhead Crane. The purpose of this survey was to identify, locate, sample, and assess the condition of accessible representative suspect LCP that may be impacted by the scope of work. A USEPA Certified Lead Risk Assessor performed the LCP survey.

Lead-Containing Paint Survey Methodology

The USEPA and U.S. Department of Housing and Urban Development (HUD) have established a definition of lead-based paint as paint or other surface coatings that contain lead equal to or greater than 1.0 mg/cm^2 or 0.5% by weight (equivalent units are: 5,000 µg/g, 5,000 mg/kg, or 5,000 ppm by weight). Surface coatings include paint, shellac, varnish, or any other coating, including wallpaper which covers painted surfaces. The limited survey consisted of a visual survey and collection of representative paint chip samples.

Lead analysis was performed by Schneider Laboratories Inc. Schneider is accredited by AIHA (Laboratory ID: 100527) to perform environmental lead testing.

2.5.8. Limited Universal Waste Survey

Universal Waste Survey Methodology

STV conducted a limited visual inspection of the site's equipment and devices to determine which systems may likely contain universal waste, such as mercury. Any control used for measurement of vacuum, pressure, fluid level, temperature, or flow rate could contain mercury. The inspection consisted of looking at lighting (fluorescent lights, light ballasts and switches) and electrical systems (load meters, supply relays, and transformers and generators).

STV conducted a limited PCB caulk inspection by performing a visual and documented assessment of representative window caulking. All existing caulk is assumed to contain detectable levels of PCBs and should be managed in accordance with TSCA, EPA, state and local regulations.

2.5.9. History and Archeology

STV conducted a review of existing drawings, printed literature, internet data, and previous reports available from various US Navy offices. A visit was made to the Portsmouth, Virginia Naval Museum where photographs and other data were obtained. STV's historian climbed the Hammerhead Crane to direct photography of historical interest. The only excavation for this project is in concrete or fill placed after 1937. There should be no disturbance of archaeological significance.

2.5.10. Cost Estimate

Estimate Software

- Per the Scope of Work CRAWFORD has utilized SUCCESS Estimator software – Version 8.1 for this submission.

Pricing Sources

- Labor

  In developing our Wage Rates for use in the SUCCESS Estimator software we have referenced Labor Rates and fringes as shown in the current Davis Bacon publications for Portsmouth, VA and other surrounding counties.

  For Taxes (Burden on Labor) CRAWFORD has performed research to determine appropriate FICA, SUI, FUI, WCI and LS&H factors by Labor Trade.

- Equipment

  We have utilized the RSMeans 2013 equipment rates.

- Materials and Non-Construction Costs

  Distributed costs include the cost of supervision and other features applicable to multiple trades. Examples include a temporary crane for demolition and site supervision for both alternatives.

  Where applicable RSMeans 2013 costs were used. All other costs are derived from past experience and historical data from similar projects. For salvageable equipment without current market prices, a percent of the purchase price for new equipment was used. A different percentage was used per piece of equipment ranging from 35% to 60%. The percentage was determined based on the total cost of new equipment and the condition of the existing equipment. These rates vary due to market conditions but are reasonable for both Government and private salvage values.

2.5.11. Present Value (Life Cycle Cost Analysis)

Present Value has been calculated by the methods included in the Whole Building Design Guide, Life Cycle Cost Analysis at http://www.wbdg.org/resources/lcca.php. For the purpose of this analysis, there are no monetary benefits associated with the presence of the Hammerhead Crane.

2.5.12. Schedule

Initial project documents were reviewed to form a basis of understanding of the crane and the scope of the proposed alternative. Through ongoing coordination with team members and bi-weekly team coordination meetings, a further understanding of the project scope and proposed methods was gained. Subject matter experts (e.g. environmental) within and outside of the team were consulted for estimating durations and logic. The schedule was assembled using Critical Path Method (CPM) industry standards, with all activities (except the first in logic network) having at least one appropriate predecessor and all activities (except the last in the logic network) having at least one appropriate successor. The software used to prepare the schedule is Oracle Primavera P6, Version 7.0.

3. DESCRIPTION

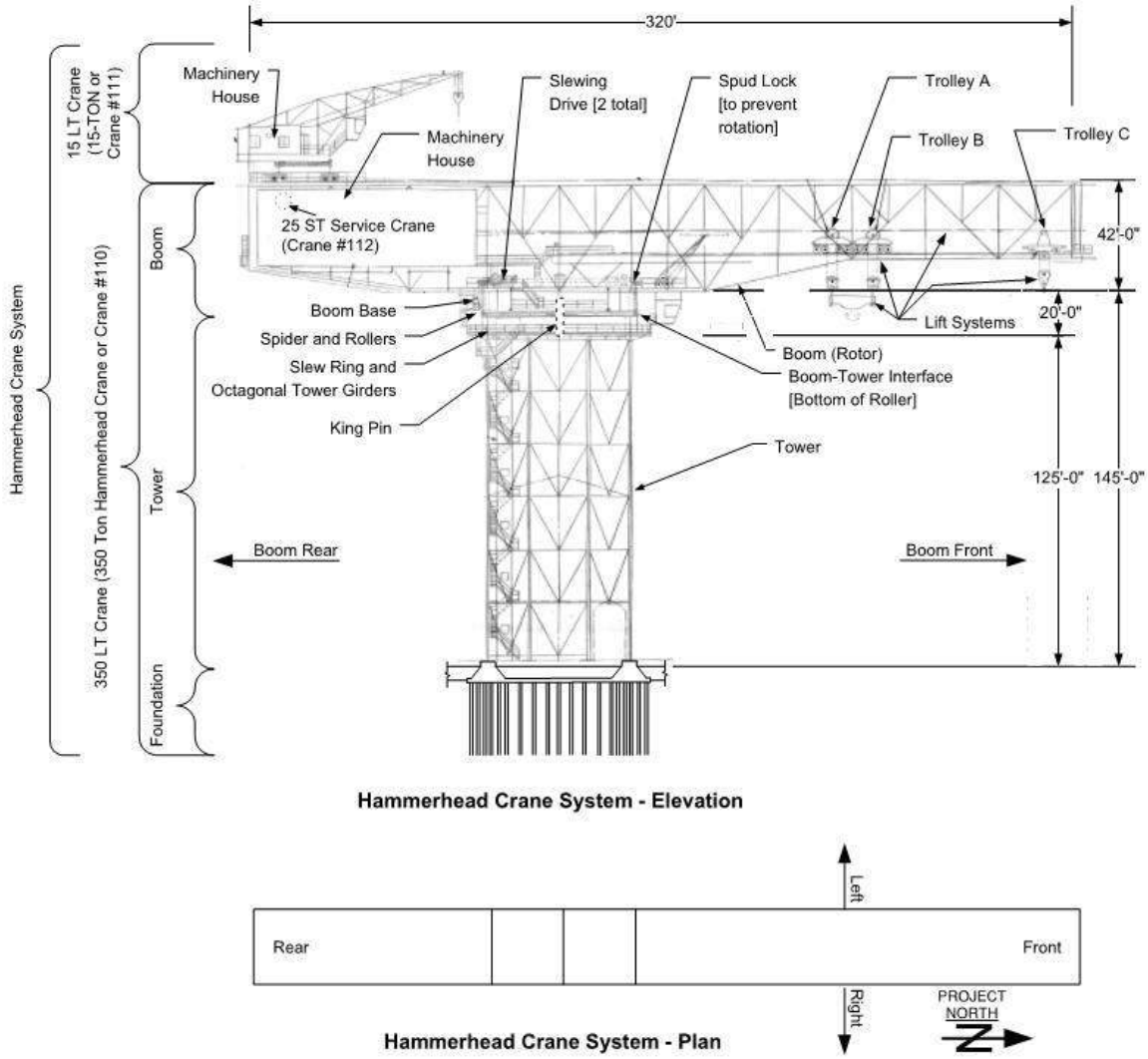

Figure 3.1 - Common Terms and Geometry of Hammerhead Crane

3.1. CRANE

The Hammerhead Crane is comprised of three cranes mounted on a single superstructure, supported by a 125-foot high octagonal trussed tower. The hammerhead section consists of a 320-foot boom that is mounted 145 feet above the ground. The metal frame boom can rotate 360 degrees on rollers, driven by gears. There are three forged-steel loading hooks on the main crane. One hook is capable of lifting 112,000 pounds. The other two hooks are each capable of lifting 392,000 pounds and were originally used together with an equalizing beam to lift the maximum rated load of 784,000 pounds (350 long tons). The operator's cab is located

underneath the boom. The second crane is an overhead bridge crane capable of lifting 25 short tons. It is a standard bridge crane mounted within the machinery room on a runway structure that extends the full length of the machinery room and just below it's roof.

The third crane is mounted on top of the main crane boom, and is capable of lifting 15 long tons. It is referred to as "the pig" because it piggybacks the main boom. It has a 50-foot long boom, and was used to make repairs on the main crane, to place radars on ships, and to lay out rigging used to lift equipment with the hammerhead. This crane is able to travel the full length of the main boom on special tracks.

The 15 Long Ton (LT) crane (#111), the main crane (#110) boom, and tower are constructed primarily of riveted structural steel. The service crane inside the machinery house (crane #112) is primarily welded steel. Repairs and modifications are primarily bolted structural steel throughout. There are cast and machined steel parts as well.

The crane has a maximum capacity of 350 tons at a radius up to 115 feet. The capacity is 50 tons at a radius of 190 feet. The 15 LT crane extends the overall maximum radius to 240 feet.

The crane is equipped with an elevator, hand-held fire extinguishers, electric evaporative toilets, and aircraft warning lights. There are holiday lights on the north end of the crane with power available.

The crane lift, rotation and linear drives operate on 250 volts Direct Current (DC) power supplied from the base Alternating Current (AC) electrical distribution system. Rectifiers are used to convert the power from AC to DC. Lighting and convenience outlets operate on 120 volts AC. The 250 volt DC generators driven by an AC motor are not currently in operation.

The tower structure is an approximately 125' tall by 56' wide structural steel trussed tower, octagonal in shape. Lateral resistance is provided by 20' tall inverted chevron braces on each of the eight faces, six levels high. Horizontal bracing occurs at each 20' levels.

All primary structural steel shapes in the tower are wide-flanged members, designated either CB shapes (corresponding to W-shapes in the current AISC manual) or CBP shapes (corresponding to HP-shapes in the current AISC manual) in the original construction documents. The eight columns are constructed of ASTM A94 Silicon Steel with a yield strength of 45 ksi and an ultimate strength of 80 ksi. All other members are specified as Federal Specification QQ-S-711a steel, Class A, equivalent to ASTM A7 steel, with a yield strength of 33 ksi and an ultimate strength of 55 ksi.

The 20' tall rotational assembly consists of an octagonal slew ring and spider, with a roller interface. Primary members consist of QQ-S-711a plate girders.

Column bases are attached to 6 ¾" thick baseplates, measuring 4'-4" wide by 4'-8" long, and anchored into the foundation with (4) 2 ½" diameter anchor bolts embedded 7'-0" into the concrete. Column bases are treated as pinned for the purpose of this analysis.

Additional details are at Attachment 2 – Site Investigation Details, Attachment 3 – Detailed Basis of Analysis and Attachment 6 – Tower Calculations Details.

There is no potable water connection to the crane. There is no sanitary sewer connection to the crane. There is no steam service to the crane. There is, however, a steam line passing between the columns of the tower. There are no fire alarms or sprinklers on the crane. Although there is a Fiber Optic conduit suspended from the crane at 10 feet to 25 feet above grade, there is no Fiber Optic service to the crane. There is no storm drain connection to the crane although there are drain pipes from the roof of the crane #110 machinery house to below the floor of the machinery house where they discharge to the atmosphere.

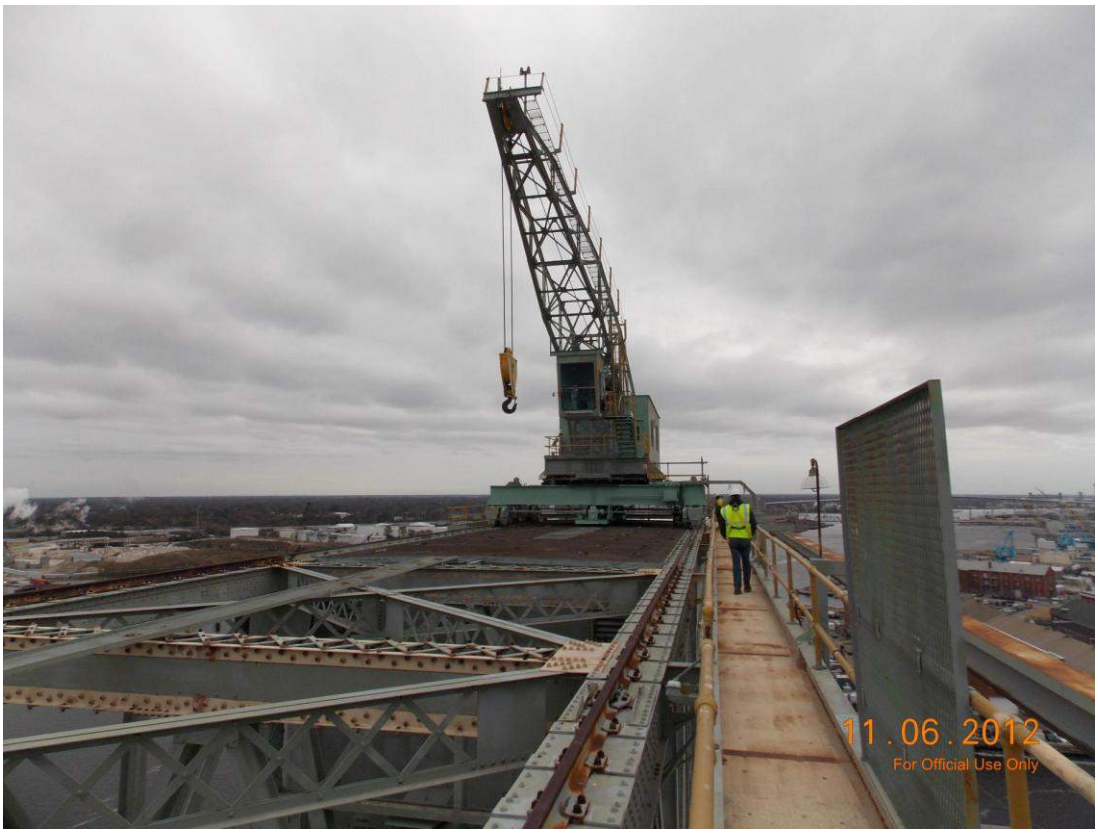

Figure 3.2 - 15 LT Crane (#111) On Top Of Main Boom

3.2. SIGNIFICANT CONSTRUCTION, MODIFICATIONS AND REPAIRS

1939 Original Construction Contractor: Heyl & Patterson
Contract No.:
Drawing No.: H & P X-2685-XX

1976 Walkway & Misc. Repairs and Painting Contractor: Hazelet & Erdal
Contract No.: N-62470-75-R-0821
Drawing No.:

1979 Mechanical and Electrical Refurbishment Contractor: Heyl & Patterson
Contract No.: N26470-79-B-2536
Drawing No.: 63983-3-XXXX
1981 Electrical System Upgrades Contractor: Harvey Hubbell Inc.
Contract No.:
Drawing No.: C-763X-XXX

4. SITE FINDINGS

An overview of the site findings is provided below. Refer to Attachment 2 for more detailed site visit findings. The site assessment included accessible portions of the crane and did not involve disassembly or nondestructive testing. Structural evaluations of above-grade components were conducted in accordance with the requirements of ASCE 11-99, "Guidelines for Structural Condition Assessment of Existing Buildings."

4.1. STRUCTURAL/MECHANICAL/ELECTRICAL

4.1.1. 350 Long Ton (LT) Crane Boom

Structural

The structure appears to be in reasonably good condition. Minor corrosion was observed at virtually all bolted repairs, at the deck plates of the machinery house and walkways, and at some plate seams. No severe corrosion was observed.

Considering that the existing corrosion has occurred over decades, the additional corrosion over the 20-year mothball period is not expected to result in significant loss of strength, except at deck plate walking surfaces of the 15 LT Crane machinery house. The deck plate just outside the entry door and in the southwest corner have corroded through. Those areas were marked with yellow tape. See Attachment 2.4.7 which includes recommendations.

The insides of boxed members and king pin were not observed. Based on the observed corrosion and the rust staining at vent holes, minor, insignificant internal corrosion of boxed members and the king pin is expected.

Measurements of some of the major truss verticals and diagonal members confirmed that the sizes comply with the original construction drawings.

Mechanical

The crane lifting equipment, including wire rope, sheaves, and hook blocks, appears to be in reasonably good condition. Some unprotected components such as wire rope, sheave grooves, and pins have slight to moderate corrosion. No significant degradation was observed. The exposed portions of the hoist ropes were the most corroded of the observed components. These hoist ropes only support the lift system, a fraction of their design capacity.

Inaccessible bearings, shafts, and other mechanical components exposed to the weather may be corroded but the corrosion is not expected to significantly degrade their strength.

Bearing retainers and cover plates appear to be in good condition with some mating surfaces sealed with paint. Bearings are expected to also be partially protected by lubrication. Although problems may occur if the crane is operated, their static capacity is expected to be intact. The

likely problems range from minor damage to gears and bearings to erratic motion of the crane. See Attachment 10-1-4 whihch includes recommended actions.

The three hoist mechanisms, two slewing mechanisms, and three trolley travel mechanisms are in good condition with minimal wear and corrosion. Portions of components observed through inspection covers were found to be in good condition without appreciable corrosion. Bearings in enclosed spaces, such as the machinery houses, are expected to be in nearly operable condition. Components exposed to the weather, such as the trolleys, have external corrosion but no significant degradation of strength was observed. The observed portions of electric motors and enclosed gear reducers had minimal corrosion.

Motion brakes are spring set and electrically released. The springs are inside the brake assemblies and are not easily inspected without disassembly. Disassembly of hoist brakes results in a hazard of releasing the brake and dropping the suspended hook blocks. None of the brakes springs were examined.

Electrical

The DC motion power and control systems of the 350 LT, 15 LT, and 25 Short Ton (ST) Cranes have been disconnected and are no longer functional. Many of the DC contactors and other circuit devices have varying levels of corrosion, which make the entire drive and control system unusable. These systems are not practical to restore for use.

The AC power system is operational in many areas including the walkway lighting, machinery house lighting, operator's cab, service receptacles, and some space heaters. At least one boom floodlight was missing from the 350 LT Crane boom and may have fallen. The floodlights are supported only by electrical conduit. Throughout the cranes, portions of conduit and, in particular, conduit fittings are corroded, but not to a degree to warrant concern. We expect that it will be practical to maintain portions of the AC power system.

4.1.2. Tower

All steel members readily accessible from walking surfaces were observed closely to search for signs of corrosion, deformation, damage, or other deviations from the intended, designed condition. Steel members not readily accessible were observed through magnified viewing devices (such as a binoculars or a camera zoom) to look for similar types of damage as mentioned above.

Slew Ring

Steel members and connections at the slew ring appeared to be in good condition. No major instances of corrosion were found, nor did there appear to be significant erosion of surface coatings. At some connections, and in undrained corners, minor surface rust was observed.

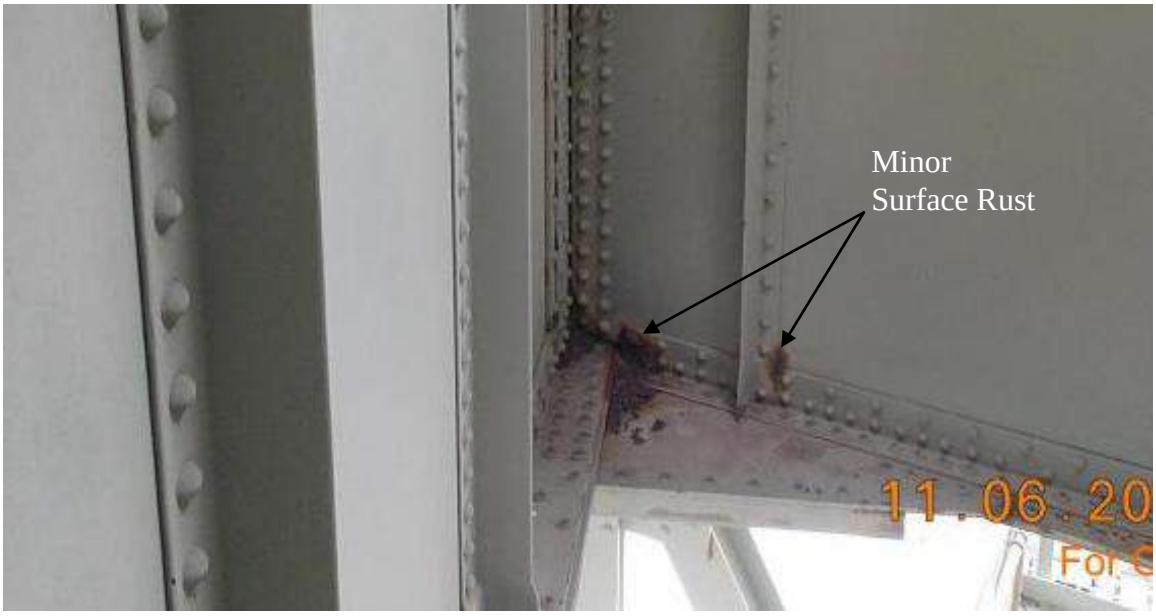

Figure 4.1 - Slew Ring Interior Corner
(Note:All Rivets in Good Condition)

Tower Structural Elements

Primary structural elements were found to be in overall good condition. No major instances of corrosion were found, nor did there appear to be significant erosion of surface coatings.

Minor surface rust was found at numerous connection points and at the edges of butted members. This minor corrosion occurred at approximately 30% of observed connection points.

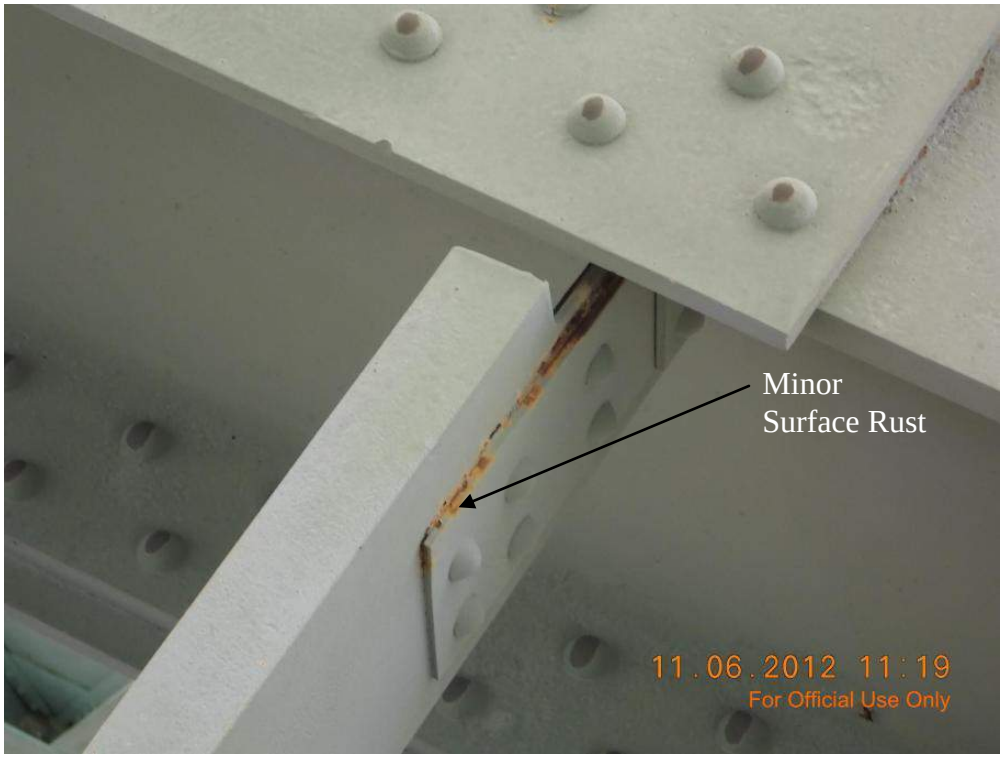

Figure 4.2 - Typical Tower Connections
(Note:All Rivets in Good Condition)

Column Bases

All steel at the column bases appeared to be in good condition, with the exception of small amounts of surface rust at the interfaces between the column and base plates. See Attachment 6-2-1 for anchor bolt detailed calculations.

Figure 4.3 - Condition at Foundation Pier

Elevator Structure and Attached Stairs

Major rust issues were found at various locations in the stair assemblies. Railing post bases are delaminated in many cases, leading to a potentially unstable condition. In addition, corrosion is occurring between the kick plate and the platforms or stair treads.

Railings for all stairs and landings on the tower and slew ring were measured to a height of 3'-6" with an intermediate horizontal bar, meeting requirements of OSHA Section 1910.23(e)(1) for walkway railings.

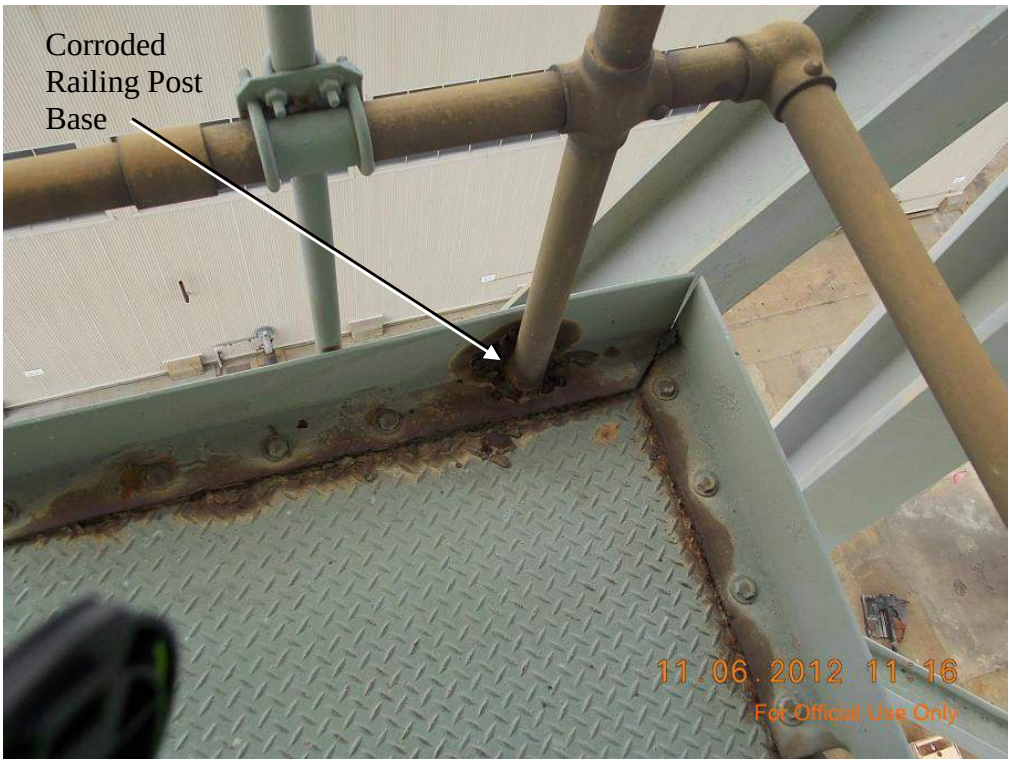

Figure 4.4 - Delaminated Railing Post Base on Tower Stairs

The elevator tower is in serviceable condition, although surface rust is occurring at connections and at the base where water has been able to accumulate. In some cases, some anchor bolts may be suffering from a loss of cross sectional area due to the corrosion (see photo).

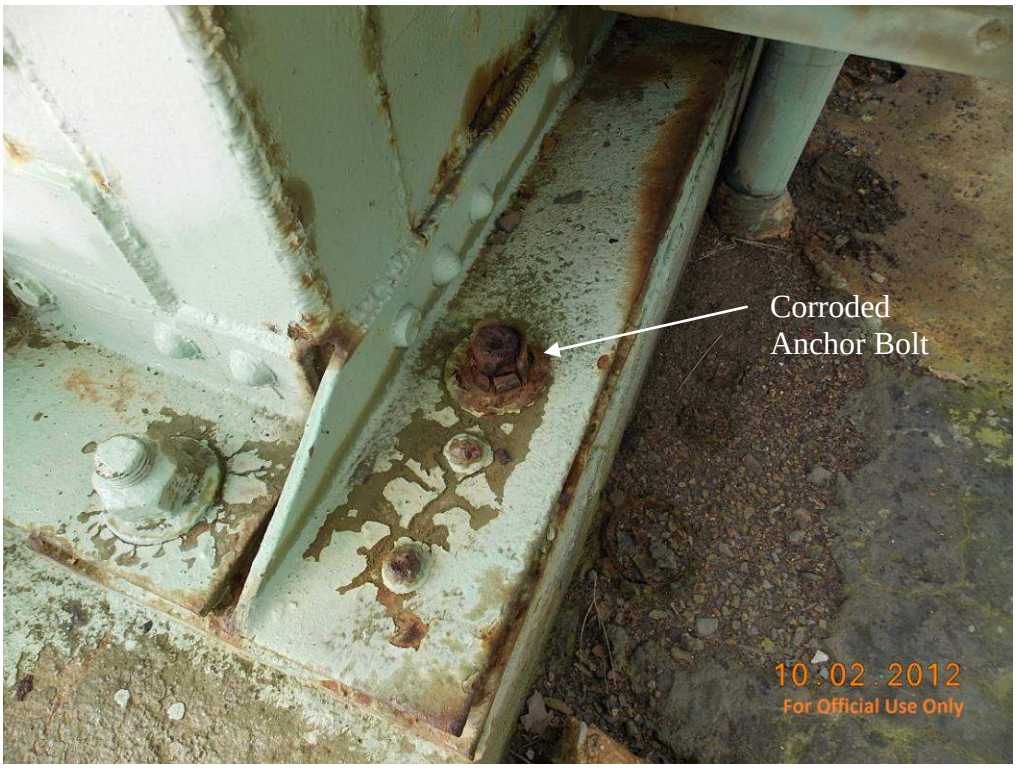

Figure 4.5 - Loss of Cross-Sectional Area Due to Corrosion at Elevator Tower Base

4.1.3. Foundation

Since full site investigation (test pits and geotechnical exploration) was outside the scope of this study, this analysis relied on the following:

- A visual inspection of the existing foundation structure as visible from the existing surface.
- The available record drawings of the structure.
- Original pile test record (P.W. Drawing No. 21687) for the pile geotechnical capacity determination.
- Engineering experience and judgment.

The following existing condition and associated assumptions are used for purpose of foundation analysis.

<u>Concrete</u>

On November 8, 2012 Moffit &Nichol (M&N) completed a visual inspection of the concrete foundation cap. No apparent sign of concrete foundation distress was recorded. As a result, the

foundation analysis assumed that the structural material properties and strength of the concrete are not degraded from the time the foundation was built. Figure 4.3 - Condition at Foundation Pier shows a typical condition of the pedestals at the crane column base. See Attachment 3-3 for detailed material strength and criteria employed.

Timber Piles

The existing timber piles for the foundation could not be visually inspected because they are enclosed by concrete cap and sheet piles.

As shown in Attachment 8, record Drawing Number P.W. 20704, dated May 19, 1944, the existing wharf supporting the Hammerhead Crane foundation is a closed wharf type structure. As seen in the section, the elevation of the bottom of the cap is 92.50' (NNSY datum). The elevation of the MLLW at NNSY is 93.29' (NNSY Datum). Given the above, the following conclusions can be made:

- Timber foundation piles are below MLLW per drawings discovered during records search.

- Given that the wharf is closed faced, the piles are fully buried in soil.

Since the timber piles are embedded into the ground, it is likely that the piles are in relatively good shape without much time dependent degradation. Also, based on M&N experience from inspecting waterfront timber structures in the past, timber piles under similar environmental and exposure conditions do not suffer excessive degradation. Therefore, given the age of the structure, exposure and environmental conditions, and based on past experience, a radial degradation of timber piles of ½" all around is conservatively assumed for the foundation pile strength analysis. However, a radial degradation of 1" is also considered for the purpose of sensitivity check.

4.1.4. 15 Long Ton (LT) Crane

Structural

The structure of the 15 LT Crane is in good condition, except for localized corrosion at the spider structure, the lower flanges of the lower frame longitudinal beams, and the deck structure near the door of the machinery house and at the decking at the rear of the machinery house.

Light corrosion exists on the machinery house walls and roof.

Considering the existing corrosion has developed over decades, the expected additional corrosion over the 20-year mothball period is not expected to result in significant loss of strength, except at some locations of the machinery house deck plate, the spider structure that aligns the rollers, and the lower inside flanges of the lower frame.

The king pin was not observed. Based on the observed corrosion, minor, insignificant corrosion of the king pin is expected.

Mechanical

The condition of the 15 LT Crane is similar to the 350 LT Crane. The lifting system, including wire rope, sheaves, and hook blocks appear to be in reasonably good condition without significant strength degradation. Internal bearings, shafts, and other mechanical components subjected to the weather may be corroded, but this is not expected to significantly degrade their strength. We expect that continued corrosion at the current rate will not result in significant loss of strength over the mothball period. The exposed portions of the hoist ropes were the most corroded of the observed components. These hoist ropes only support the lift system, a fraction of their design capacity.

The crane machinery components, including the hoist, slewing, and travel mechanisms are all in good condition with minimal wear and corrosion. There is little evidence of wear resulting from use in the observed mechanical components. Portions of machinery components observed through inspection covers were in good condition without significant corrosion. Bearings in enclosed spaces, such as the machinery houses, are expected to remain in good condition. The observable portions of electric motors and enclosed gear reducers indicate minimal corrosion.

Motion brakes are spring set and electrically released. The springs are inside the brake assemblies and are not easily inspected without disassembly. Disassembly of hoist brakes results in a hazard of releasing the brake and dropping the suspended hook blocks. None of the brakes springs were examined.

Electrical

As discussed in the 350 LT Crane section, the DC power system is unusable and not practical to restore for use. The motors, however, remain in good condition.

The AC power system is operational in many areas. Walkway lighting, machinery house lighting, operator's cab, service receptacles, and some space heaters remain energized and functional.

4.1.5. 25 Short Ton (ST) Service Crane

Structural

The structure of the 25 ST Service Crane was observed from the machinery deck. The crane structure appears to be in good condition and is expected to remain in good condition since it is inside the machinery house.

Mechanical

The machinery was observed from the platforms and girders of the crane. There was no power on the crane. In general, the machinery components appear to be in reasonably good condition.

Electrical

As discussed in the 350 LT Crane section, the 25 ST Service Crane is exclusively powered by DC which has been disconnected. The level of corrosion inside electrical panels and in logic components is greater than similar components of the 350 LT crane. The motors were not observed but are expected to be in reasonably good condition.

4.2. SAFETY ISSUES

The Hammerhead Crane is generally in good conditions with safety precautions provided at the time of construction. There are, however, specific issues that need to be addressed. Some are due to more specific current safety requirements. See Attchment 10 for specific recommended actions.

The FALL PROTECTION PLAN prepared by Norfolk Naval Shipyard personnel included specific hazards, non-compliant items, and steps the Navy would take to provide safe access. The FALL PROTECTION PLAN provided significant assistance in preparing the Safety Plan used for the on-site investigation.

The stairs that provide access from ground level to the crane are damaged. Several handrail post bases are cracked, repaired, and cracked again. See photograph at Attachment 2, Table 2-2.

The top hand rail at the exterior stairs on the south end of the 350 LT crane machinery house does not appear to meet current criteria for height above the corresponding tread. See Figure 4 in PHOTOGRAPHS at the end of this narrative.

At the entry to, and inside the machinery house for, Crane 111 (15 LT crane) the walking surface is perforated due to corrosion. Those areas were marked by yellow tape during site investigations. See Figure 4.6, a photograph of failed walking surface.

Figure 4.6 - Corrosion of Walking Surface in Machinery House Crane 111

Access above the slew ring (ring gear) crosses ladders without fall protection. Harness, secure points of temporary attachment, and lanyards are required at those locations. Training in fall protection as well as site-specific features is required for each person who transits those specific locations. See Figure 4.7.

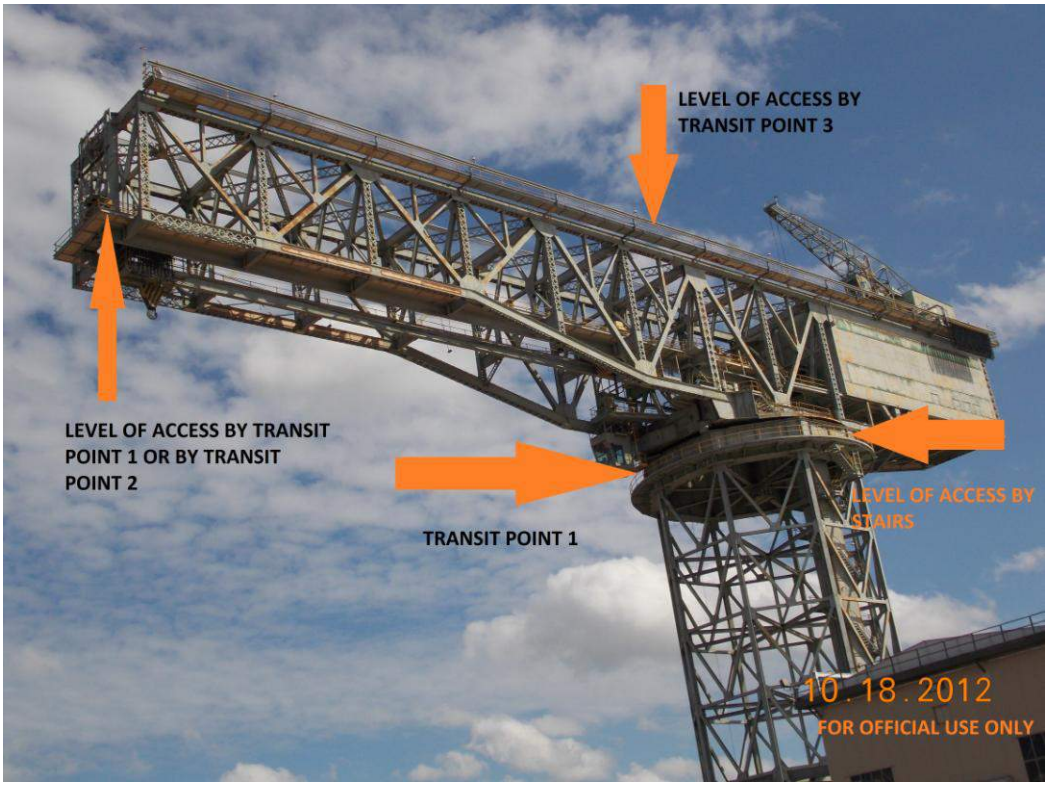

Figure 4.7 - Unprotected Transit Points Overview

Man-lift cranes are commonly used during major restorations. Use of a man-lift crane presents fall hazards specific to the configuration employed. EM 385-1-1, Safety and Health Requirements Manual requires specific on-site proof testing prior to use.

The connections for holiday lights are corroded on their exteriors.

Existing electrical outlets in and around the machinery houses do not meet current requirement for Ground-Fault-Interrupt protection.

The suspension for the festooning system has minor surface rust. When the festoon cabling is moved by hand, the suspension rollers exhibit significant freedom perpendicular to the long axis of the suspension. Compared to other elements of the crane, the festooning and its suspension appear to be of lighter gage material. Other steel items on the crane made from sections thinner than the structural members have corroded to the point of failure. See an example at Attachment 2-4-6. Also see Attachment 10-1-4 which includes recommended actions.

Falling debris presents a hazard during periods of high wind.

There are two routes of electrical power to the crane. Each must be separately verified as energized or de-energized. The 120 volt Alternating Current (AC) electrical power is provided at the base of the crane from three cylindrical transformers through a switch. The 120 volt power

was energized on 28 Jan 2013. The 250 volt Direct Current (DC) electrical power is provided through an enclosed, manual transfer switch at the base of the crane.

The paint on the crane has significant lead content.

Brake shoes, caulk and pitch-like material in the pitch pockets contain asbestos.

There is a live steam line approximately 9 feet above grade passing between the legs of the tower structure. The steam line is subject to damage during salvage operations and during demolition with resulting risk of burns to workers.

Occasional, slow moving vehicle traffic was observed between the Hammerhead Crane and building 262.

There are numerous tripping hazards on the surface in and around the crane. Several are conduits. Some appear to be temporary installations.

Above the slew ring there are numerous locations where equipment or structural components can cause head injuries during normal access and egress.

Climbing the stairs can be strenuous. During periods of warm weather heat exhaustion is a real hazard.

Hazards to the eyes are present in the forms of structural members, conduits, and equipment adjacent to travel paths and work areas.

4.3. HAZARDOUS MATERIALS FINDINGS

Asbestos Containing Materials Findings

The analytical results of the samples collected during the limited asbestos survey of the Hammerhead Crane, located at the Norfolk Naval Shipyard, indicate that the following building materials were confirmed or assumed to contain asbestos greater than one percent (>1%) in content:

- Asphaltic Pitch Pocket Material
- Brake Pad Material
- Gray Window Caulk
- Electrical Wire Insulation (Assumed)
- Electrical Panels (Assumed)
- Roofing Materials (Assumed)
- Exterior Window Caulk (Assumed)

Results of the limited asbestos inspection and sample analysis are presented in Attachment 14.

Lead Containing Paint Findings

The lead content of paint samples ranges from 38% to less than 0.003%. Detailed lead findings are at Attachment 14.

Universal Waste Survey Findings

STV identified potential universal waste in the form of light ballasts and fluorescent light tubes. A summary of site components that may contain universal waste, including their location, is included in Attachment 14.

The light fixtures are considered to contain mercury and are therefore classified as universal waste. The light fixtures should be removed and disposed in accordance with Unified Facility Guide Specification 02 84 16, Handling of Lighting Ballasts and Lamps Containing PCBs and Mercury.

See Attachment 14 for detailed findings and recommendations.

4.4. SITE AND SUPPORTING UTILITIES

4.4.1. Plumbing

The hammerhead crane is not currently served by any plumbing system services such as domestic water, sanitary, natural gas or compressed air. The 350 LT crane machinery house is served by a roof drainage system consisting of roof drains and downspout piping. The downspout piping runs from the roof drains, internally through the machinery house, and discharges below the machinery house to the atmosphere. Incinerating toilets are currently located in the machinery houses of the 350 LT crane and the 15 LT crane. The Incinerating toilets are electric, provided with vents that are not connected, and use heat to reduce waste to ash. The toilets do not require water to operate, therefore no plumbing system piping is associated with the units.

4.4.2. Fire Protection

The hammerhead crane is not currently served by a firewater service, nor is it served by any automatic fire suppression system. Portable fire extinguishers are the only manual means to fight a fire in the areas above the slew ring. Portable fire extinguishers are located throughout the machinery houses of the 350 LT crane and the 15 LT crane, as well as operator areas.

4.4.3. Steam and Steam Meter

A live steam line with metering station passes from the above ground utility trench, that runs parallel to berth number 2, between supporting columns of the crane tower approximately 9 feet above grade. At the western side of the crane tower base the steam line goes from overhead to underground. Patched concrete indicates the steam line enters Building 262. There is conduit

from the steam metering station to an electrical panel at the base of the elevator shaft. There is a local steam meter display on the electrical panel.

4.4.4. Fiber Optic

There are EMT conduits, junction boxes and other fittings marked Fiber Optics suspended from the crane tower from approximately 5 feet above grade to 25 feet above grade. The conduit runs to a junction box at the above ground trench. At the western side of the crane tower base the Fiber Optic conduit goes from overhead to underground. Patched concrete indicates the Fiber Optic conduit enters Building 262.

5. ANALYSIS

5.1. BASIS OF ANALYSIS

The basis of analysis is included in Attachment 3. They are organized by boom, tower, and foundation.

5.2. STRUCTURAL ANALYSIS

5.2.1. 350 LT Crane Boom

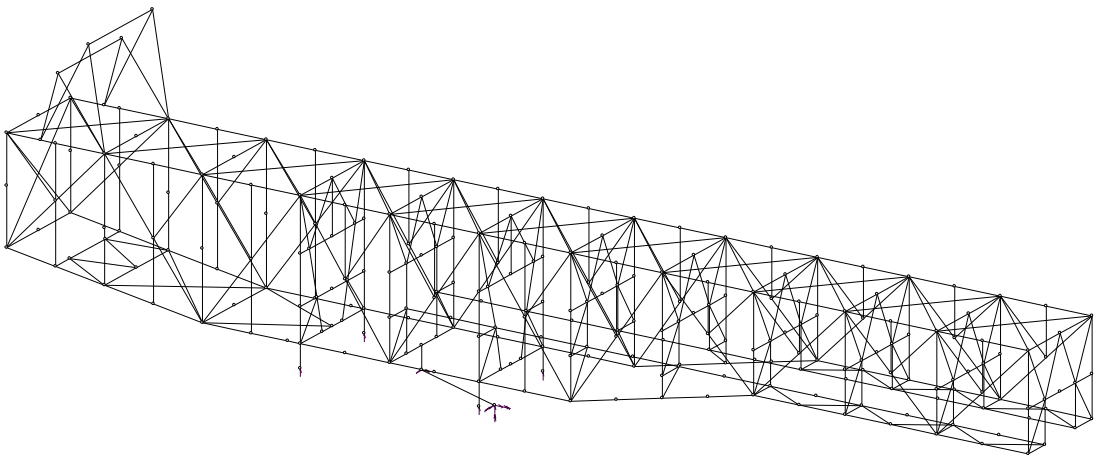

Figure 5.1 - LAS Boom Finite Element Model

Analysis Description

The boom structure was analyzed using the Liftech Analysis Suite (LAS), a finite element analysis program developed for the analysis of crane structures. The structure was modeled using beam and boundary elements. The analysis included both static and dynamic responses. The seismic response was determined using the natural periods of vibration of the combined boom, tower, and foundation. The finite element analysis determined displacements and global forces and stresses in the primary boom members and the boundary elements, i.e., the reactions, acting on the tower through the rollers, the king pin, and the spud lock. Calculations were made to evaluate connections, calculate roller loads, and evaluate the machinery house structure.

In the analysis, the boom was held by the spud lock in one orientation with boom axis parallel to the wharf face. The 15 LT Crane was included as a unit, permanently locked in place near the rear of the boom.

Findings

The calculations performed for this study compared well with the original design calculations. For example, the calculated wind loads and the calculated roller loads and truss member loads are similar.

The calculations indicate the boom structure complies with the review criteria:

- The boom truss structure has adequate strength.
- The base structure above the rollers has adequate strength.
- The boom is stable and does not lift from its roller supports.
- The king pin and rotate spud lock systems have adequate strength.
- The machinery house structure has adequate strength, although some members may plastically deform. The fiberglass windows of the machinery house structure were not reviewed.

Refer to Attachment 4-1 for additional details.

5.2.2. Tower

Analysis Description

The tower portion of the structure was analyzed using the finite element modeling computer program RISA-3D. In its current orientation and physical state, the tower portion of the crane is capable of withstanding the current code required loads in a mothball state.

The tower was evaluated under dead/gravity loads, wind loads, and seismic loads. Other loading conditions (ice, rain, snow, etc) were examined on a preliminary basis and determined to be insignificant, as they were not the controlling vertical and lateral cases.

Boom loads were applied to the tower at six fixed locations: vertical loads at the four corners of the boom base, and horizontal loads at the king pin and spud lock.

Parameters for determination of wind, seismic, and gravity loads were obtained from UFC 3-301-01 “Structural Engineering.”

Wind loads were developed for a 105 mph basic wind speed in accordance with the site specific climatic loading data in UFC 3-301-01. As the structure is located in a hurricane-prone region adjacent to the water, the site exposure factor was determined to be Exposure C. Based on discussions with NAVFAC personnel, the tower was assigned to importance category II, the default category for facilities without unusual operational importance or hazard. This resulted in an importance factor of 1.0. Wind pressures were determined in accordance with ASCE 7-05

"Minimum Design Loads for Buildings and Other Structures" utilizing the analytical procedure. The tower structure was analyzed as an octagonal trussed tower and the wind force coefficient, C_f was calculated using a ratio of solid area to gross area of the members on one tower face.

Seismic loads were also developed per the site-specific climatic data provided in UFC 3-301-01. The structure was analyzed in accordance with the Equivalent Lateral Force Procedure according to ASCE 7-05. The site class was determined to be E, selected in lieu of site-specific geotechnical information to conservatively match the typical profile of soft clay soils found in the region. The tower structure was analyzed using the response modification factor coefficient, R, for steel structures not specifically detailed for seismic resistance. The Seismic Design Category was determined to be Category B.

Wind and seismic analysis factors are summarized in Attachment 3.

In accordance with acceptable American Institute for Steel Construction procedures, the tower's steel members and connections were analyzed under ASCE 7-05's load combinations for Allowable Stress Design (ASD). These combinations can be found in Attachment 3 under the basis of design. The most significant compression forces in the columns occurred under the 1.0*Dead + 1.0*Wind-Z (westward) condition, developing over 1280 kips of compression in the south-most columns, and reaching 72% of its combined axial and bending capacity per AISC Equation H1-1. The most significant uplift forces occurred in the 0.6*dead + 1.0*Wind-Z (eastward) load case, with uplifts reaching approximately 200 kips in the northwest-most columns (Note: base uplift reactions do not necessarily indicate pile tension, as this uplift force is balanced by the weight of the pile cap and surcharge before inducing any load in the piles).

Findings

Analysis of the structural system showed that all primary tower elements meet current structural steel code (AISC 360-05 Specification for Structural Steel Buildings) requirements for ASD design. Results of the computer analysis can be found in Attachment 6. A spreadsheet of member design code check results can also be found in Attachment 6. The tower members all have a demand to capacity ratio of less than 1.0 under all load combinations, indicating their acceptability.

The tower column base plates were also analyzed per AISC procedures and found to be acceptable.

Each column base has an anchor bolt grouping of (4) bolts in a rectangular pattern. The anchor bolts are embedded 7'-0" into the concrete slab foundation. The anchor bolts were analyzed per Appendix D of ACI 318-05: "Building Code Requirements for Structural Concrete." The controlling factor of the anchor bolt analysis was steel strength, with each anchor bolt having an allowable tension capacity of 600 kips and an allowable shear capacity of 416 kips. The full anchor bolt capacity calculation can be found in Attachment 6-2-1: Anchor Bolt Capacity.

Column bases were evaluated for the pinned-reaction loads developed in the RISA tower model. In accordance with ACI guidelines, Load Resistance Factor Design (LRFD) load combinations

were used for the analysis. Each base was analyzed for its 4-bolt group, with allowable shears and pullouts equaling four times the individual bolt capacities. To be considered acceptable, bolt group stresses could not exceed either 100% of their allowable tension or shears, or 120% of the combined values. A summary of the various interaction ratios can be found in the column base analysis in Attachment 6-2-2: Column Base Code Check. The results of this analysis indicate that each tower column anchorage group has sufficient uplift capacity and shear capacity to resist the applied pullout and shear values for the various load combinations.

Also analyzed were the slew ring's octagonal girders, nine foot deep double-webbed built up plate sections. A model of the slew ring was compiled in RISA-3D™, and evaluated based on distributed dead weight as well roller loads imparted from the boom. For this, two loads cases were used; the first was ASD combination putting the maximum load on the front rollers, and the second the ASD combination putting the maximum load on the rear rollers. Induced stresses were found to be approximately one-third of the maximum allowable stress of 19.8 ksi, demonstrating the girder's acceptibility. These results are included in Attachment 6-3: Slew Ring Structural Analysis.

5.2.3. Foundation

Description

Foundation piles have been assumed to have ½-inch of radial degradation based upon comparison with other similar construction from approximately the same time period. The Hammerhead Crane piles were analyzed twice: once with ½-inch of radial degradation and once with 1-inch of radial degradation.

Foundation timber piles have been modeled in the SAP2000 with three dimensional frame elements. Top of the piles in the model are connected to the bottom of the concrete cap with moment free joint connection having only translational degrees of freedom. The existing drawings of the foundation show that the piles penetrate only 6" into the concrete cap. A moment free connection between piles and concrete cap conservatively idealizes the existing detail for finite element analysis of the structure. Bottoms of the piles have been assumed to have fixed support connection with all degrees of freedom restrained.

Since the piles are spaced close to each other, the concrete cap was analyzed as a "beam on elastic foundation" using the piles axial stiffness as spring constants. A 3-dimensional SAP2000 model of the foundation was developed using frame elements and linear springs to represent the concrete cap and piles, respectively.

Findings

The concrete cap is not overstressed. During extreme, short term events, the factor of safety in the timber piles is reduced from the original value of 2.0 to 1.68. Under design load combinations using short term extreme wind, the slight reduction in the factor of safety is acceptable.

5.2.4. 15 LT Crane

Analysis Description

The 15 LT Crane structure was analyzed with manual calculations. A finite element analysis was not required for the following reasons:

- The structure is not complex and is easy to analyze.
- For the mothball condition considered, the applied loads are significantly smaller than the original operating condition for many of the components.

Manual calculations focused on an evaluation of crane stability and the strength of the stowage systems required for the mothball condition.

For securing of the crane, the capacity of the braking systems and motors was ignored, i.e., the rotate spud lock was evaluated to resist the entire slewing moment, and the travel spud lock was evaluated for the entire shear load in the travel direction.

A comparison to the original design calculations was also performed.

Findings

Calculations indicate that the strength of the 15 LT Crane structure is adequate for mothball conditions with no future use.

The translate spud lock on the left side of the crane restrains the crane from travelling along the support rails. Calculations indicate that the translate spud lock system, including the pin on the crane and brackets along the rail system, can resist the calculated stowed force. Although not required, additional resistance is provided by two rail clamps, one at each rail, and the crane travelling machinery.

Calculations indicate that the entire 15 LT Crane is stable for the review loads applied in the most severe directions, i.e., tie-downs are not required between the 15 LT Crane and 350 LT Crane boom. Although not required, rail hold downs are provided at each corner.

Calculations indicate that the rotor, the upper rotating portion of the crane, may lift at the front rollers due to the design hurricane with the wind blowing toward the rear of the 15 LT Crane. The large counterweight at the back of the machinery house results in the center of gravity of the rotor being near the rear rollers. The calculated instability is small, requiring only a modest righting moment. Lashing the rotor to the travel base is recommended. Refer to Attachment 9-4 and Attachment 10-1-4-3.

6. ALTERNATIVES

6.1. MOTHBALL ALTERNATIVE

6.1.1. Basis of Preservation

The basis for the mothball option is:

- The crane system will be mothballed for a period of 20 years.
- No future restoration to an operating condition.
- The appearance will be preserved to maintain the visual identity of this historic crane system to the public. The crane system should be recognizable from a distance of one mile.
- The crane system will be safe and secure over the mothball period.
- Some inspection and maintenance will be required.
- No actions will be taken to preserve future value other than to maintain adequate strength, safety, and appearance as required above.
- Electrical systems that are not to be used will be disconnected and secured. Electrical power for security, inspection, and maintenance operations will be maintained.

6.1.2. Mothball Approach

A summary of recommended actions is provided below. More detailed descriptions of actions are provided in Attachment 10.

Entire Hammerhead Crane System

Disconnect the DC power and non-essential AC power.

Perform annual inspections to verify the mothballed condition and repair as needed.

350 LT Crane

Weather seal the machinery house as practical to prevent water intrusion and add drain holes in the flooring where water may collect.

Secure the spud lock engagement mechanism so it cannot be easily disengaged.

Secure the hoist ropes to prevent the ropes from paying out from the drum if the brake systems fail by adding wire rope clamps, come-alongs, and slings to connect the hoist rope to the machinery base structures. Install signs to warn against adjusting the hoist brake system.

Provide a safe connection for the 240/120 volt AC system by wiring through the slip ring enclosures, and secure slip ring enclosures with a locking device.

Remove all four festoon systems and the floodlights to prevent possible falling debris. A festoon system supplies each of the three 350 LT Crane trolleys, and a fourth festoon feeds the 15 LT Crane.

Remove the wire ropes from the trolley position indicating system. These ropes may corrode and fall from the crane.

Tower

The tower structure meets current code requirements in its current condition and orientation, and can be placed into a mothball state. In order to ensure continued stability, some minor repairs and periodic maintenance will be required.

Surface rust will need to be repaired at all affected locations. This can be accomplished by removing all rust by mechanical methods in accordance with SSPC (The Society for Protective Coatings) SP-15: "Commercial Power Tool Cleaning", and treating the location with a rust-inhibitive coating. This requirement occurs to varying but minor degrees at about half of the tower connection points.

The tower structure should be periodically monitored for similar corrosion development in the future, as horizontal surfaces and interior corners of connections provide an environment for standing water to accumulate and could cause further surface rust issues with time.

Should corrosion be noted on a wider scale as current coatings age, the entire tower structure can be cleaned and coated to provide longer term protection.

Stairs and Elevators

The stairs will need to undergo more rigorous corrosion rehabilitation. Where corrosion has not caused delamination or a loss of thickness of cross sectional area, affected areas can be repaired by removing the rust and applying a corrosion-inhibitive coating as described above.

Where a loss of thickness or delamination has occurred, however, the damaged elements will either need to be reinforced or removed and replaced in kind. Diagnosis for repair or replacement should be conservative in nature, and any element with any likelihood of more than superficial damage should be repaired or replaced.

Surface rust will need to be repaired at affected locations in the elevator tower as well. This can be accomplished similarly to above. Anchor bolts affected by rust should be augmented by installing adhesive anchor bolts adjacent to damaged locations.

Foundation

No retrofit for the foundation is recommended for the loading conditions evaluated per the scope of work. We have assumed no reduction in the foundation due to damage or corrosion, except the pile radius reductions described in the analysis.

15 LT Crane

Secure the rotating and translate spud mechanisms so they cannot be easily disengaged.

Install wire rope or chain lashing between the rotor and the travel base to prevent uplift in a hurricane.

Install structural cover plates of steel or plywood over the corroded deck plate above the spider and in the rear of the machinery house to seal and to eliminate a fall-through hazard.

Install drain holes in the spider tray structure.

Secure the hoist ropes to prevent the ropes from paying out from the drum if the brake systems fail, and install signs warning not to adjust the braking system.

Provide a safe connection for the 240/120 volt AC system by providing a fixed connection around the 15 LT Crane festoon system and slip rings, and secure the slip ring enclosure with a locking device.

25 ST Service Bridge Crane

No actions are recommended for mothball preparations of this crane. It is expected to remain stable for the duration of the 20-year mothball period. All electrical power has been removed from the crane and it remains positioned at the rear of the machinery house, over the floor hatch.

Hazardous Materials

ASBESTOS: A Virginia Permit Application and Virginia Asbestos Abatement and a Demolition/Renovation Notification Form must be submitted prior to abatement activities. Asbestos containing materials must be properly removed by a licensed contractor prior to construction activities in accordance with the Unifed Facility Guide Specifications (UFGS) Section 02 82 16.00 20, Virginia Asbestos Control Regulation and all other federal, state and local regulations. Contractors and employees working in this building should be made aware of the possibility that concealed ACM may be found during demolition. They should be advised not to disturb known or suspect ACM without owner approval. Any concealed building

materials discovered during demolition activities, which are suspected to contain asbestos, should be sampled and analyzed to confirm the presence of asbestos prior to disturbing.

LEAD CONTAINING PAINT: All work that affects lead-containing paint should be performed in strict accordance with Unified Facility Guide Specifications (UFGS) 02 81 00, 02 82 16.0020, 02 82 14, and 29 CFR 1926.62, federal, state and local laws.

PCB AND MERCURY The fluorescent light fixtures should be removed and disposed in accordance with Unifed Facility Guide Specifications (UFGS) Section 02 82 16.00 20, Handling of Lighting Ballasts and Lamps Containing PCBs and Mercury.

Plumbing

The roof drainage system which serves the machinery house must remain to minimize loads associated with ponding water and ensure proper drainage. The roof drains must be cleaned and internal piping inspected and tested to verify positive drainage flow. The two incinerating toilets are not functional and therefore must be disconnected and removed from the machinery houses to ensure the toilets are not used.

Fire Protection

A total of six portable fire extinguishers are located throughout the crane. Per the requirements of NFPA 10, portable fire extinguishers must be inspected monthly, and maintained yearly when serving a building or structure. Since the crane is to be mothballed, access is no longer available and the fire extinguishers are no longer necessary, nor can they be inspected or maintained. The portable fire extinguishers should therefore be removed in entirety. When access to the crane is required, a temporary portable fire extinguisher should be utilized.

6.1.3. Recommended Actions

Recommendation comments follow:

- Securing crane motions with two systems is recommended to provide a redundant load path and to protect against an inadvertent action that may remove one securing.

- The 350 LT and 15 LT slewing motion is resisted by spud locks in addition to motor brakes on the drive machinery.

- The 15 LT Crane travel motion has a spud lock, two rail clamps, and motor brakes.

- The hoist ropes on the 350 LT and 15 LT Cranes are only held by brakes and should have additional securing.

- An exception to the redundant securing is to rely on the motor brakes to restrain the 350 LT Crane trolleys for the following reasons:

  - The hurricane wind loading and earthquake inertial loads are much less than the braking capacity.
  - Access to the brakes is difficult.
  - The trolleys are restrained by the trolley rail end stops.

- Removal of oils and lubricants on the cranes is not recommended because they are not expected to leak. Lubrication oil in reducers is contained in solid housings, without split lines or shaft seals below the oil level. In order for the oil to leak from a reducer, appreciable corrosion is required.

- Power required for potential future repairs is expected to be provided on a temporary basis as part of the repairs, e.g., temporary cabling for welding machines.

- Perform additional abbreviated inspections following significant storms to verify a safe and secure condition is maintained and that water intrusion protection is functioning.

6.1.4. Estimate of Reasonable Cost Summarized

With engineering and NEPA support, the total first cost of the mothball alternative is $534,594. Construction costs are summarized below. See Attachment 10-1-1 for additional details.

The most reasonable Life Cycle Cost includes only that work required to place the Hammerhead Crane in Mothball Condition plus annual maintenance. The cost of salvaging equipment exceeds the value, and is therefore not included. The total estimated Life Cycle Cost is $771,673. Details may be found at Attachment 10-1-2.

B--System Report
SUBMITTAL: FINAL
SOFTWARE VERSION: SUCCESS 5.X
REPORT REVISION: Nov. 5 2003
ESTIMATE SAVED AS: Norfolk Naval Shipyard - Hammerhead Crane Study - M

CONSTRUCTION CONTRACT:
DATABASE USED: RSM 2012
PRINTING DATE: 11 July 2013
Page 1 OF 1

PROJECT: Hammerhead Crane Study - Mothball Option
PROJECT SITE: Norfolk Naval Shipyard
A/E NAME: STV Inc
PROJECT SIZE: 1.00 LS
CONSTRUCTION FUNDS AVAILABLE, DOLLARS: $1,500,000

ESTIMATOR:
CAT CODE:
UIC:
PROJECT #:
DATE OF ESTIMATE: 07/11/2013
BID DATE:

WBS CODE	DESCRIPTION	COST/PROJECT UOM BASED ON 1 LS	COST/ WBS UNIT	TOTAL MARKED UP COSTS MATL	LABOR	EQUIP	UNIT COST	TOTAL
	HAMMERHEAD CRANE STUDY - NORFOLK NAVAL SHIPYARD, PROJECT TOTALS							233,000
	PROJECT NOTE: This estimate excludes any work to remove and salvage crane equipment							
	****PROJECT SUBTOTALS****			27,275	203,336	2,562	0	233,173
MOTHBALL ALTERNATIVE				*27,275*	*203,336*	*2,562*	*0*	*233,173*
-PREPARATION RECOMMENDATIONS				27,275	203,336	2,562	0	233,173
01	BOOM 350 LT CRANE			6,077	108,496	299	0	114,872
02	TOWER 350 LT CRANE			17,065	60,309	1,880	0	79,254
03	15 LT CRANE			4,133	34,530	384	0	39,048
-DISTRIBUTED COSTS				1,453	113,058	0	0	114,511
	This level is distributed							

Distributed costs are included in cost of the Preparation Recommendations. See Attachment 10-1, E-Detail Report Unburdened, individual sub/crew.

6.1.5. Schedule of Design and Construction Summarized

The summary schedule shows the major activities and overall duration. Details are shown in Attachment 10-1-3.

Activity ID	Work Days	Early Start	Early Finish
Hammerhead Crane - Mothball Alternative (without Salvage)	**798**	**24-Sep-12**	**4-Dec-15**
PROJECT INITIATION	**319**	**24-Sep-12**	**9-Jan-14**
Consultant Study & Report	**189**	**24-Sep-12**	**21-Jun-13**
Navy Decision on Alternative	**20**	**24-Jun-13**	**22-Jul-13**
Navy Review of Real Estate/Real Property Procedures	**130**	**24-Jun-13**	**9-Jan-14**
Navy Procurement of Engineering/Environmental Consultant(s)	**45**	**23-Jul-13**	**24-Sep-13**
Alternative 1 - MOTHBALL	**544**	**25-Sep-13**	**4-Dec-15**
Engineering	**230**	**25-Sep-13**	**28-Aug-14**
NEPA Compliance	**249**	**25-Sep-13**	**24-Sep-14**
Sources Sought	**65**	**26-Jun-14**	**24-Sep-14**
Contractor Solicitation	**65**	**25-Sep-14**	**7-Jan-15**
Construction	**160**	**8-Jan-15**	**25-Aug-15**
Construction Start Up	**75**	**8-Jan-15**	**24-Apr-15**
Crane Mothball Preparation	**105**	**6-Feb-15**	**7-Jul-15**
Site Work & Clean Up	**10**	**8-Jul-15**	**21-Jul-15**
Construction Close Out	**25**	**21-Jul-15**	**25-Aug-15**
Project Close Out	**70**	**26-Aug-15**	**4-Dec-15**

6.2. DEMOLITION ALTERNATIVE

6.2.1. Basis of Demolition

Prior to demolition the necessary actions and approvals for compliance with the National Environmental Policy Act (NEPA) and the National Historic Preservation Act will be completed. NNSY Public Works will have resolved any property book issues including, but not limited to, the type of property and which office has authority to dispose of it. Demolition will result in a clear site.

6.2.2. Demolition Approach

Demolition should be accomplished by a specialty contractor selected based upon price and other factors. Factors other than price may include experience in dismantling steel structures over 200 feet high and removal of heavy machinery over 100 feet above grade for salvage. In order to obtain the lowest net cost, as much of berths 1 and 2 as possible should be reserved for the contractor to use barges during the contract period. Physical work required to comply with NEPA should be included in the contract or completed by the Government prior to the contract award. The demolition contract should include phasing to require relocation of the active steam line, steam metering, and fiber optics, as well as final disconnection of electrical service prior to demolition.

6.2.3. Recommended Actions

- Develop a Request For Proposal to describe the demolition work and other factors the Government will use to award a contract.

- Specifically allow the use of barges for transportation of contractor equipment, relocation of salvaged materials, and to remove materials of demolition (scrap). Unless otherwise specifically required by Navy policy, disallow removal of scrap by truck.

- Require a general demolition plan and specific, relevant experience from the bidders as well as some measurable indicator of safety. Award the contract based upon Best Value to the Government.

- Require an engineered demolition plan from the successful contractor.

- Treat bonds, insurance, safety plans and similar as construction.

- Allow sufficient duration in the demolition contract for on-site man-lift tests, and other project-specific actions.

- Perform an engineering review of the engineered demolition plan, safety plans, schedule and similar prior to Notice To Proceed.

- Include sufficient line items in the contract to ascertain the general extent of the salvage operations the contractor plans and the net cost or savings to the Government.

- All existing portable fire extinguishers are to be removed during demolition. There are no additional fire protection systems that require removal.

6.2.4. Estimate of Reasonable Cost Summarized

With engineering and NEPA support, the total cost of the demolition alternative is $1,736,773. Demolition costs are summarized below. Additional details are at Attachment 10-2-1.

B--System Report
SUBMITTAL: FINAL
SOFTWARE VERSION: SUCCESS 5.X
REPORT REVISION: Nov. 5 2003
ESTIMATE SAVED AS: Norfolk Naval Shipyard - Hammerhead Crane Study - D

CONSTRUCTION CONTRACT:
DATABASE USED: RSM 2012
PRINTING DATE: 11 July 2013
Page 1 OF 1

PROJECT: Hammerhead Crane Study - Demolition Option
PROJECT SITE: Norfolk Naval Shipyard
A/E NAME: STV Inc
PROJECT SIZE: 1.00 LS
CONSTRUCTION FUNDS AVAILABLE, DOLLARS: $3,000,000

ESTIMATOR:
CAT CODE:
UIC:
PROJECT #:
DATE OF ESTIMATE: 07/11/2013
BID DATE:

WBS CODE	DESCRIPTION	COST/PROJECT UOM BASED ON 1 LS	COST/ WBS UNIT	TOTAL MARKED UP COSTS MATL	LABOR	EQUIP	UNIT COST	TOTAL
	HAMMERHEAD CRANE STUDY - NORFOLK NAVAL SHIPYARD, PROJECT TOTALS							**1,401,000**
	PROJECT NOTE: Davis Bacon Wages Norfolk 01/2012							
	****PROJECT SUBTOTALS****			(1,237,528)	699,065	1,938,976	0	1,400,513
DEMOLITION ALTERNATIVE				***(1,237,528)***	***699,065***	***1,938,976***	***0***	***1,400,513***
-DEMOLITION TASKS				**(1,237,528)**	**699,065**	**1,938,976**	**0**	**1,400,513**
01	HAMMER HEAD CRANE DEMOLITION			843	524,952	1,658,552	0	2,184,347
	**** Gutting the interior of the Boom Crane and Steel Structure Demolition*							
02	CONCRETE BASE DEMOLITION			4,956	13,484	403	0	18,843
03	BASE ELECTRICAL DEMOLITION			624	23,809	915	0	25,348
04	FIBER OPTIC RELOCATION			783	5,451	0	0	6,235
05	SALVAGEABLE EQUIPMENT REMOVAL			0	41,352	266,059	0	307,410
	**** All costs to remove salvageable equipment include labor & equipment to disassemble, hook up to crane, & lower onto barge for transportation.*							
06	STEAM LINE RELOCATION			53,679	90,017	13,047	0	156,743
07	EQUIPMENT SALVAGE VALUE			(386,023)	0	0	0	(386,023)
08	STEEL SCRAP SALVAGE			(912,390)	0	0	0	(912,390)
	**** Steel scrap pricing from scrapmonster.com for Eastern US.*							
-DISTRIBUTED COSTS				**2,811**	**379,032**	**319,625**	**0**	**701,468**
	This level is distributed							

Distributed costs are included in cost of the Demolition Tasks. See Attachment 10-2, E-Detail Report Unburdened, individual sub/crew.

6.2.5. Schedule of Design and Construction Summarized

The summary schedule shows the major activities and overall duration. Details are shown in Attachment 10-2-3.

Activity ID	Work Days	Early Start	Early Finish
Hammerhead Crane - Demolition Alternative	894	24-Sep-12	4-May-16
PROJECT INITIATION	319	24-Sep-12	9-Jan-14
Consultant Study & Report	189	24-Sep-12	21-Jun-13
Navy Decision on Alternative	20	24-Jun-13	22-Jul-13
Navy Review of Real Estate/Real Property Procedures	130	24-Jun-13	9-Jan-14
Navy Procurement of Engineering/Environmental Consultant(s)	45	23-Jul-13	24-Sep-13
Alternative 2 - DEMOLITION	640	25-Sep-13	4-May-16
Engineering	230	25-Sep-13	28-Aug-14
NEPA Compliance	325	25-Sep-13	23-Jan-15
Sources Sought	65	10-Oct-14	23-Jan-15
Contractor Solicitation	65	26-Jan-15	27-Apr-15
Construction	180	28-Apr-15	26-Jan-16
Construction Start Up	80	28-Apr-15	19-Aug-15
Crane Equipment/Assemblies Removal & Salvage	55	16-Jul-15	1-Oct-15
Crane Demolition	35	2-Oct-15	19-Nov-15
Site Work & Clean Up	10	20-Nov-15	7-Dec-15
Construction Close Out	25	7-Dec-15	26-Jan-16
Project Close Out	70	27-Jan-16	4-May-16

7. SUMMARY OF STUDY

7.1. PURPOSE

The purpose of the study is to provide Naval Facilities Engineering Command with sufficient information to decide between two courses of action; place the crane in mothball status without future use, and demolish the crane to leave a clear site. Specifically, the study is to deliver recommended actions for the two alternatives with their respective first cost, life cycle cost and duration.

7.2. CONCLUSIONS

The crane is in adequate structural condition to be placed in a mothball condition with some preparations. The crane can be demolished. Either alternative would require compliance with the National Environmental Policy Act and the National Historic Preservation Act.

During extreme events over short periods of time, the factor of safety for the timber foundation piles is reduced from 2.0 to 1.68. See paragraph 5.2.3 of this report and Attachment 8-2-4. Lashing with wire rope or chains is required to maintain the stability of the 15 LT Crane. See paragraphs 5.2.4 and 6.1.2 of this report, as well as Attachment 9-1.

7.3. RECOMMENDED ACTIONS

The actions recommended for the mothball alternative are to maintain the crane in a safe condition, only. The actions recommended for the demolition alternative are to leave a clear site. Details are shown at Attachment 10, parts 10-1-4 and 10-2-4.

7.4. FIRST COST AND LIFE CYCLE COST

The first cost of the mothball alternative includes engineering, NEPA process activities, and the contract to prepare the crane for mothball status. The first cost for the mothball alternative is approximately $534,600. The life cycle cost (present value) of the mothball alternative, which accounts for semi-annual and annual maintenance, is approximately $771,700.

The first cost of the demolition alternative includes engineering, NEPA process activities, and the contract to demolish the crane. The first cost of the demolition alternative is $1,701,900. The demolition contract also includes the cost of re-locating a steam line, steam metering, and fiber optic conduits which are attached to the columns of the crane. If the crane is demolished, the steam and fiber optic infrastructure would be subject to damage. Since there is no maintenance of the crane after demolition, the first cost of demolition is the life cycle cost.

The mothball alternative is the lower cost alternative by approximately $930,260 over 20 years. Details of cost are shown in Attachment 10, parts 10-1-1 and 10-2-1.

7.5. SCHEDULE

The estimates of duration assume funding and authority for either alternative will be available for the work to proceed continuously once it has begun.

The estimated duration of the mothball alternative is approximately 40 months. The schedule begins with Project Initiation, which includes this study, and ends with Project Close Out.

The estimated duration of the demolition alternative is approximately 45 months. The schedule for demolition also begins with Project Initiation, which includes this study, and ends with Project Close Out. The durations estimated for NEPA compliance activities for the demolition alternative are estimated to be several months longer than the corresponding activities for the mothball alternative.

The mothball alternative is estimated to have the shorter duration by approximately 5 months. Details of the schedules are shown at Attachment 10, parts 10-1-3 and 10-2-3.

PHOTOGRAPHS

Photographs

PHOTOGRAPH 1

Looking northeast from off base at Hammerhead Crane.
(11/06/12 FOR OFFICIAL USE ONLY)

PHOTOGRAPH 2

Looking east at Hammerhead Crane.

PHOTOGRAPH 3

Hammerhead Crane tower.

PHOTOGRAPH 4

Looking north at Hammerhead Crane.

PHOTOGRAPH 5

Roller Ring and Operator's Cab.

PHOTOGRAPH 6

Interior of Machinery House.

PHOTOGRAPH 7

Interior of Machinery House.

PHOTOGRAPH 8

Trolley A.

PHOTOGRAPH 9

Underside of Boom.

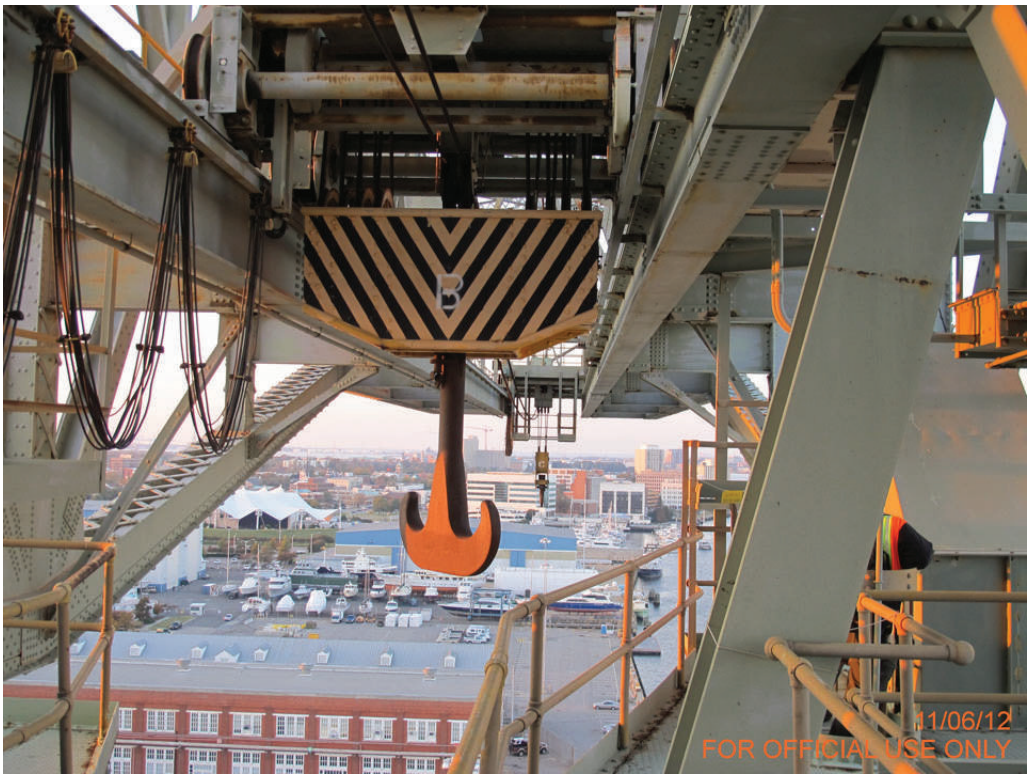

PHOTOGRAPH 10

Underside of Boom - Tolleys B and C.

FIGURES & DRAWINGS

FIGURES & DRAWINGS

0 375 750 Feet

SCALE: 1" = 750'

N

PROJECT LOCATION MAP
HAMMERHEAD CRANE STUDY
NORFOLK NAVAL SHIPYARD
PORTSMOUTH, VA

SOURCE: Esri ArcGIS Online Map Service (World Imagery)

CREATED BY: STV, Inc.

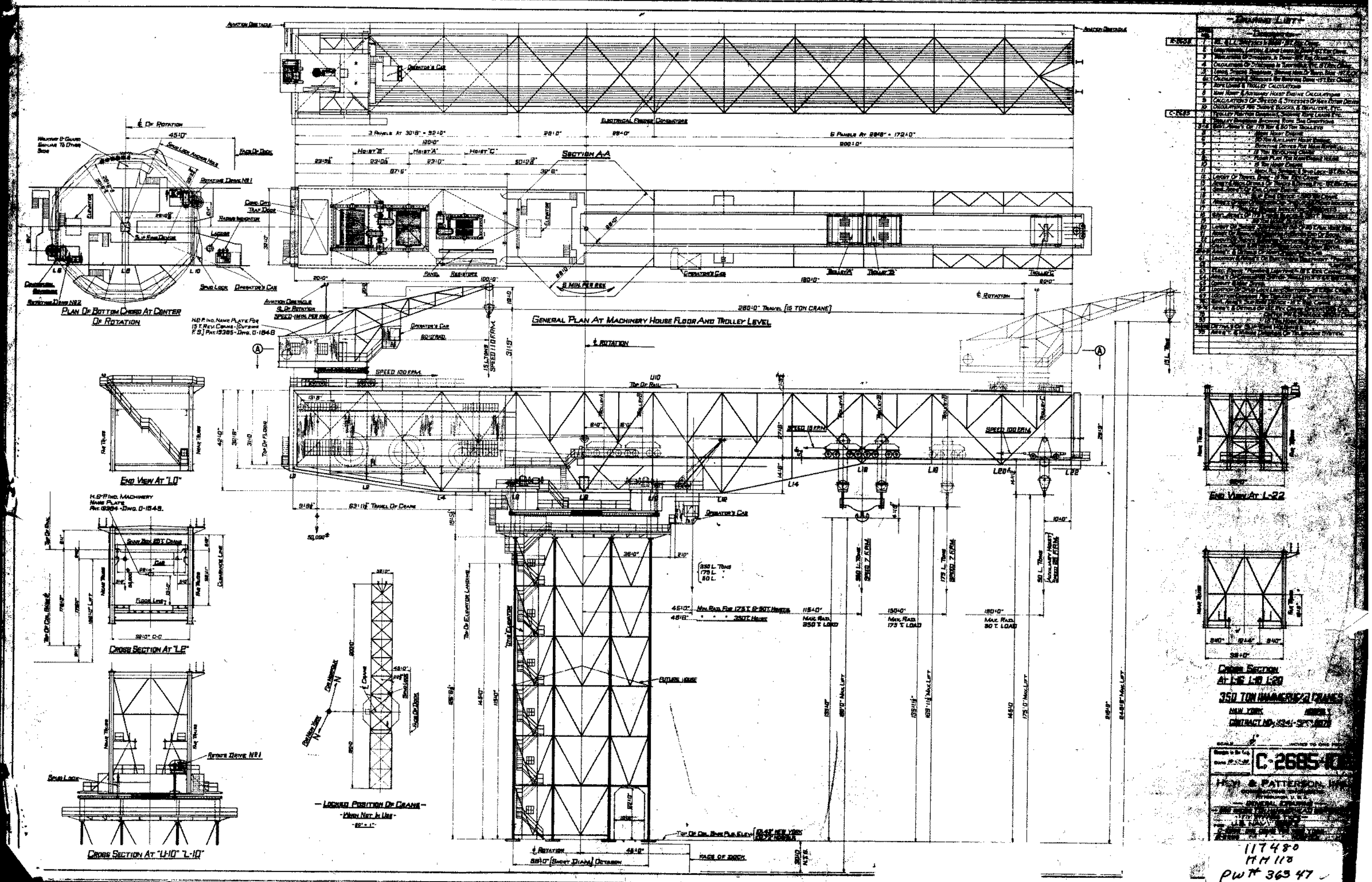
Plan Of Bottom Chassis At Center Of Rotation
Section A-A
General Plan At Machinery House Floor And Trolley Level
End View At "L0"
End View At L-22
Cross Section At "L8"
Cross Section At "U-10" "L-10"
Cross Section At L16 L18 L20
350 Ton Hammerhead Crane
Locked Position Of Crane
Drawing List
C-2685-10
117480
MM 110
PW# 36347

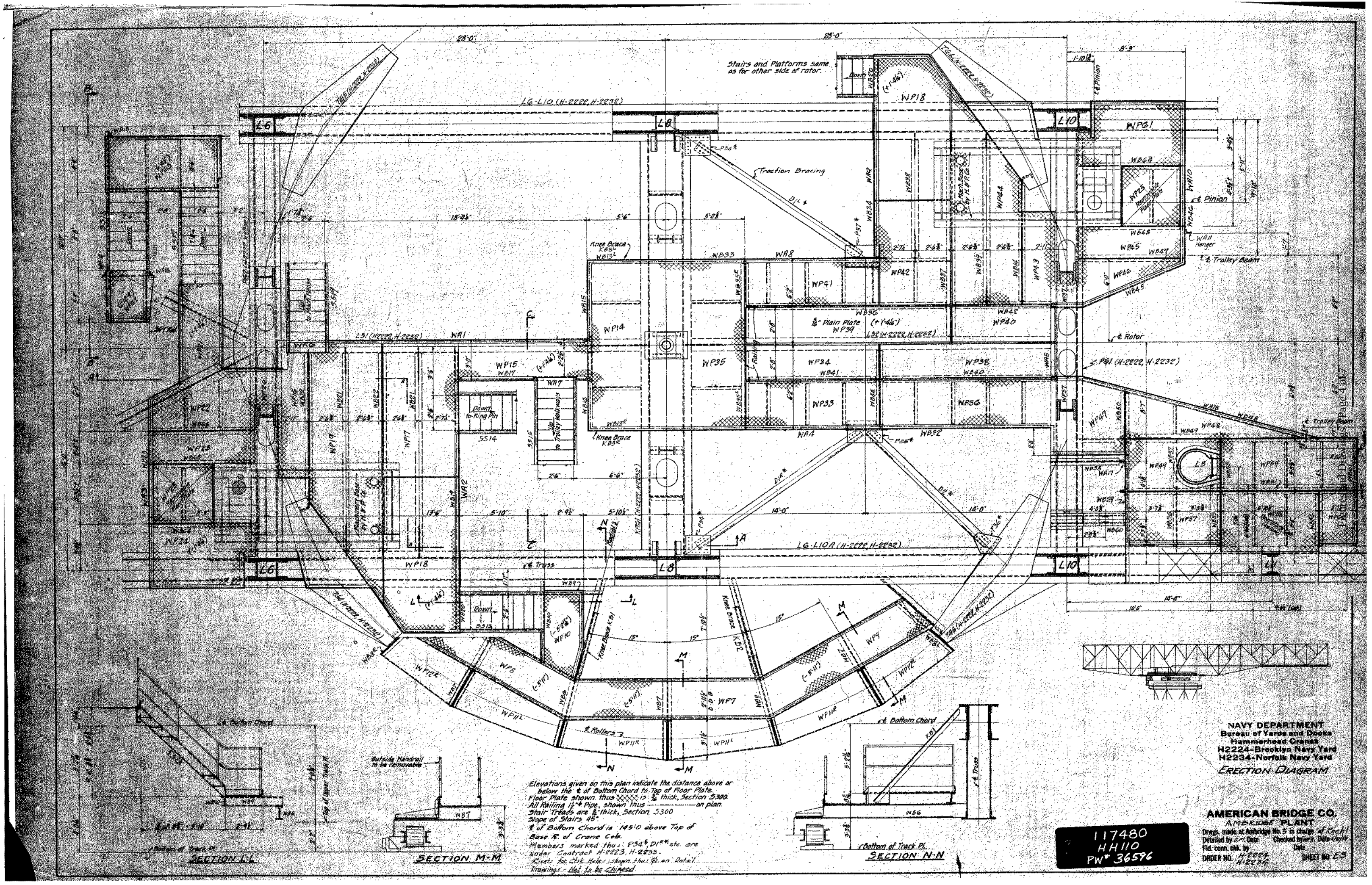
Stairs and Platforms same as for other side of rotor.
Traction Bracing
Knee Brace
Plain Plate
Down to Ring Pin
Down to Trolley Walkways
Down
℄ Pinion
Hanger
℄ Trolley Beam
℄ Rotor
℄ Truss
℄ Rollers
℄ Bottom Chord
Outside Handrail to be removable
Elevations given on this plan indicate the distance above or below the ℄ of Bottom Chord to Top of Floor Plate.
Floor Plate shown thus 13 ⅜ thick, Section 5300.
All Railing 1½" ϕ Pipe, shown thus ——— on plan.
Stair Treads are ⅜ thick, Section 5300
Slope of Stairs 45°.
℄ of Bottom Chord is 145'-0 above Top of Base ℄ of Crane Cols.
Members marked thus: P34* D1R* etc. are under Contract H-2223, H-2233.
Rivets for Chk. Holes shown thus ⊕ on Detail.
Drawings - Not to be Changed
SECTION L-L
SECTION M-M
SECTION N-N
NAVY DEPARTMENT
Bureau of Yards and Docks
Hammerhead Cranes
H2224-Brooklyn Navy Yard
H2234-Norfolk Navy Yard
ERECTION DIAGRAM
AMERICAN BRIDGE CO.
AMBRIDGE PLANT
Drwgs. made at Ambridge No. 5 in charge of Tech
Detailed by Date Checked by Date
Fld. com. chk. by Date
ORDER NO. H2224 H2234
SHEET NO. E3
117480
HH110
PW* 36596

Itemized Weights & Center of Gravity From ℄ Rotation
For 75 Ton Double Drum Hoist Engine

Amt.	Item	Wt. Of Ea. Item	Total Weight	✓
2	135 HP Motors - 2 Brakes & Sheaves	8,000#	16,000#	86.3'
2	Coupling & Motor Bolts	300#	600#	"
2	Large Pinion & Sh. Sc. Shaft Tap. Countersunk & Pinion	7,900#	15,800#	"
2	Countershaft - Both Ends & Pinion	2,800#	5,600#	"
2	Drum Shaft & 66" Dia. Drum	65,000#	130,000#	"
2	Drum Gear 172" P.D.	13,500#	27,000#	"
2	Drum Gear Guard	4,100#	8,200#	"
2	Drum Pedestal - Gear Side	4,400#	8,800#	"
2	Pedestal Cap, Bushing & Bolts - Gear Side	600#	1,200#	"
2	Drum Pedestal - Other Side	2,700#	5,400#	"
2	Pedestal Cap, Bushing & Bolts - Other Side	500#	1,000#	"
2	Total Misc. Bolts	1,200#	2,400#	"
1	Double Drum Base Structural Steel		42,000#	"
1	Magnetic Clutch Incl. Guard		500#	"
2	Limit Switch Including Sheaves	500#	1,000#	"
1	Total Electric Wiring		6,500#	"
	Total Weight		270,000#	86.3'

Itemized Weights & C. of G. From ℄ Rotation
For 30 Ton Auxiliary Hoist Engine

Amt.	Item	Weight	✓
1	135 HP Motor - 2 Brakes & Sheaves	7,900#	60.09
1	Coupling & Motor Bolts	300#	60.09
1	Large Pinion & Sh. Sc. Shaft & Tap. Countersunk & Pinion	7,900#	57.70
1	Countershaft - Both Ends & Sheaves	2,800#	54.67
1	Drum Shaft & 77" Dia. Drum	25,000#	54.28
1	Drum Gear 134" P.D.	11,500#	50.23'
1	Drum Gear Guard	3,000#	50.00
1	Drum Pedestal - Gear Side	2,500#	53.56
1	Pedestal Cap Bushing & Bolts - Gear Side	500#	53.56
1	Drum Pedestal - Other Side	2,200#	50.00'
1	Pedestal Cap - Bushing & Bolts - Other Side	400#	50.00
1	Frame Base - Structural Steel	13,500#	51.50'
1	Limit Switch Incl. Sheaves	400#	53.75'
1	Total Electric Wiring	2,000#	51.50'
1	Floating Swing Support & R.H. End of Base Incl. Pipe	3,000#	47.08
	Total Weight	85,000#	52.0'

Itemized Weights & C. of G. From ℄ Rotation
For Panel Board - Resistor Rack & Wiring

Amt.	Item	Weight	✓
1	Electric Panel Board	6,000#	44.0'
1	Resistor Rack & Wiring	12,000#	49.0'

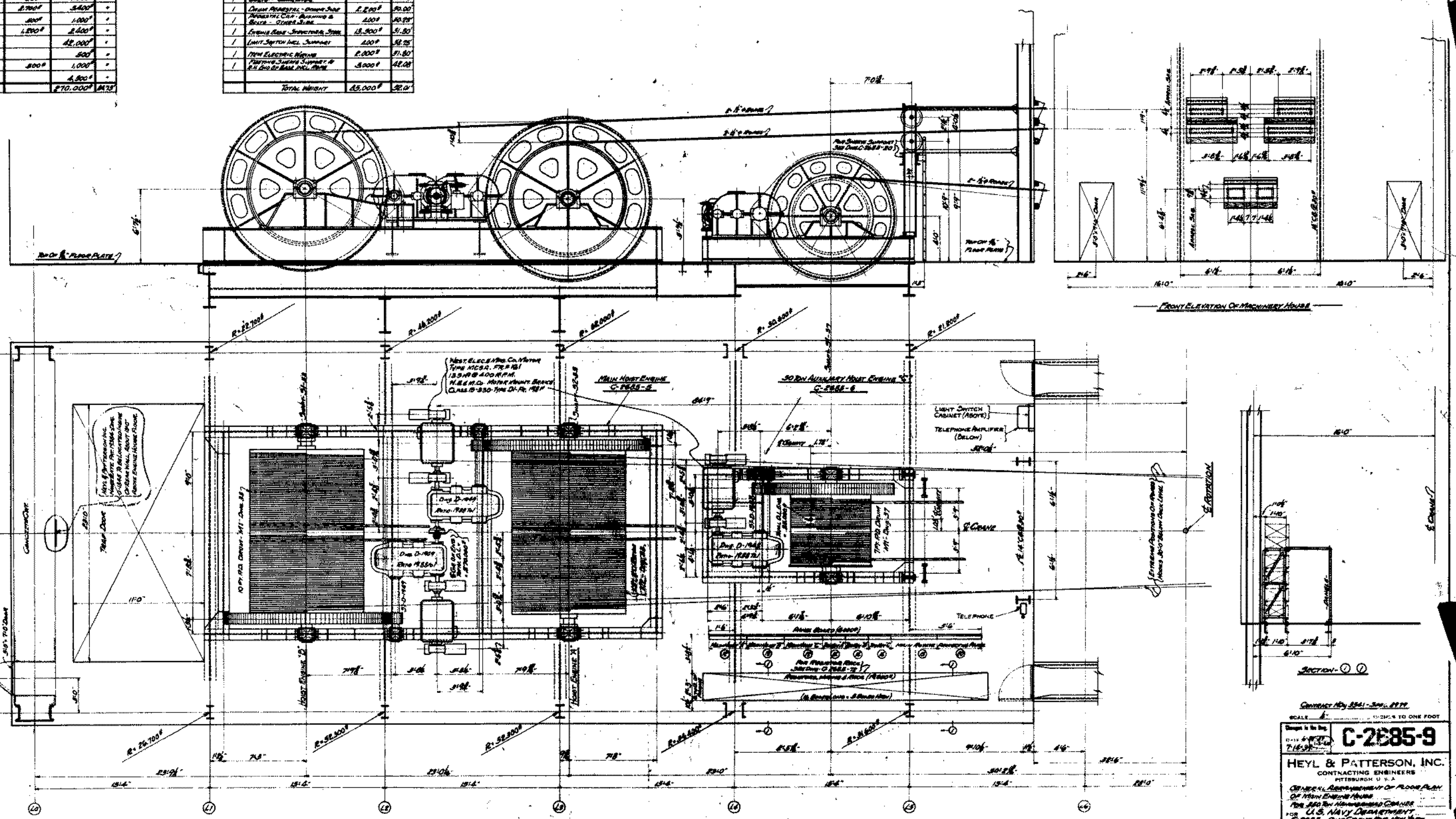

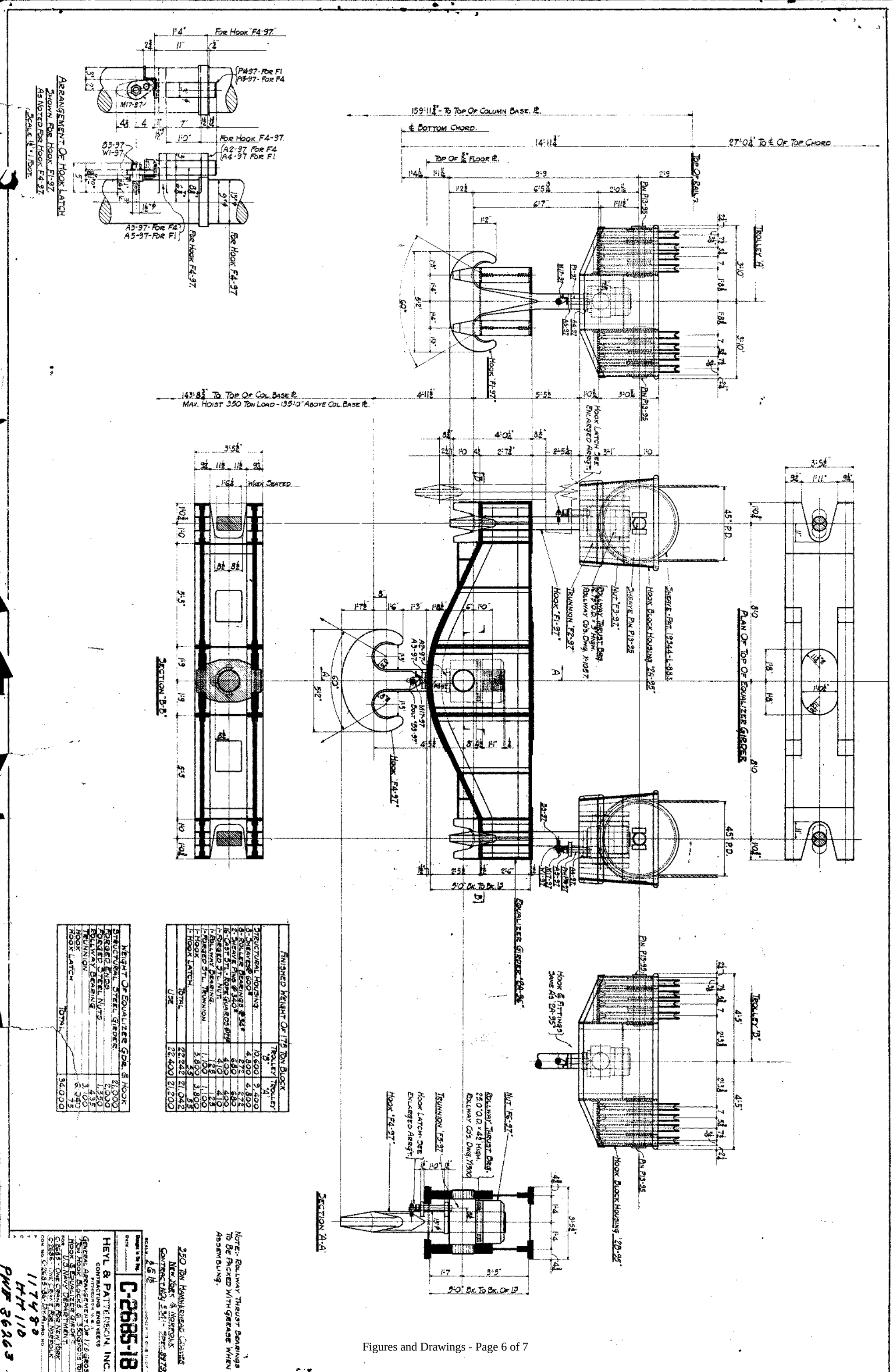

Finished Weight Of 175 Ton Block	Trolley "B"	Trolley "A"
Structural Housing	10,600	9,400
8 - Sheaves @ 600#	4,800	4,800
8 - Roller Bearings @ 34#	272	272
2 - Sheave Pins @ 340#	680	680
16 - Cast Stl. Rope Guards @ 25#	400	400
1 - Forged Stl. Nut	410	410
1 - Rollway Bearing	125	125
1 - Forged Stl. Trunnion	1,100	1,100
1 - Hook	3,800	3,800
1 - Hook Latch	33	33
Total	22,242	21,042
Use	22,400	21,200

Weight Of Equalizer Gdr. & Hook	
Structural Steel Girder	21,000
Forged Ends	2,000
Forged Steel Nuts	1,350
Rollway Bearing	435
Trunnion	3,100
Hook	9,040
Hook Latch	75
Total	34,000

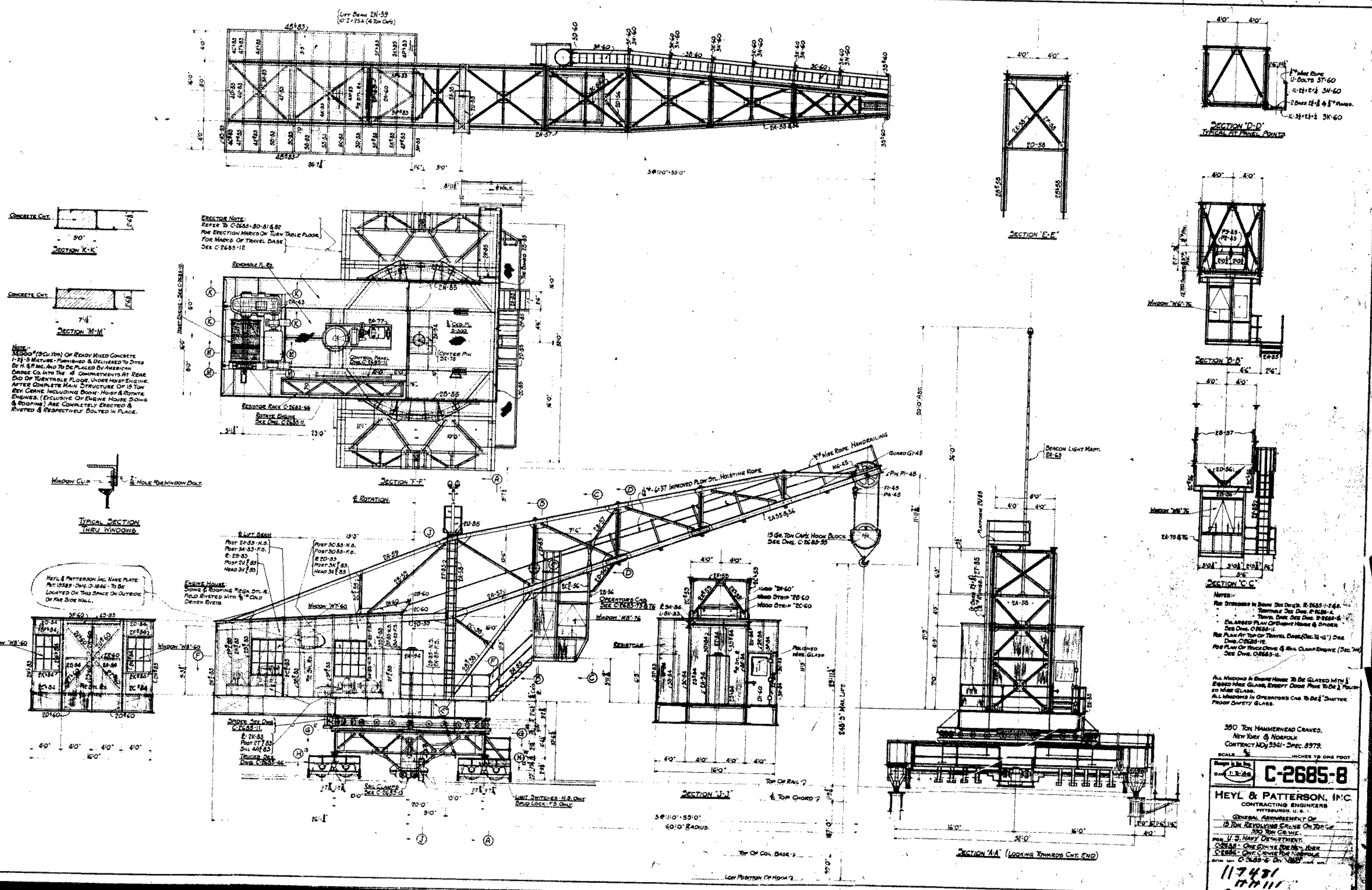
Section "K-K"
Section "M-M"
Note:- 33,000# (90 Cu. Yds) Of Ready Mixed Concrete 1-2½-5 Mixture - Furnished & Delivered To Sites By H. & P. Inc. And To Be Placed By American Bridge Co. Into The 4 Compartments At Rear End Of Turntable Floor, Under Hoist Engine. After Complete Main Structure Of 15 Ton Rev. Crane Including Boom - Hoist & Rotate Engines, (Exclusive Of Engine House Siding & Roofing) Are Completely Erected & Riveted & Respectively Bolted In Place.
Erector Note:
Refer To C-2685-80-81 & 82 For Erection Marks Of Turn Table Floor, For Marks Of Travel Base See C-2685-12
Section "F-F"
Section "E-E"
Section "D-D"
Typical At Panel Points
Section "B-B"
Section "C-C"
Section "J-J"
Section "A-A" (Looking Towards Cwt. End)
Typical Section Thru Windows
Heyl & Patterson Inc. Name Plate
Engine House
Operators Cab
Hoisting Rope
Hoist Drum
Rotate Engine
Center Pin
Center Panel
Boom Hoist Engine
Beacon Light Mast
Hand Rail
Guard
Hook Block
Rotation
Top Of Rail
Top Of Chord
Top Of Cab Back
Low Position Of Hook
Max Lift
Radius
Hand Strip
Polished Wire Glass
Shutter Proof Safety Glass
Ties Stringers In Boom See Dwg. R-2685-1-2 & 3
Turntable See Dwg. R-2685-4
Travel Base See Dwg. R-2685-5
Enlarged Plan Of Engine House & Spider See Dwg. C-2685-11
For Plan At Top Of Travel Base (Sec. "G-G") See Dwg. C-2685-12
For Plan Of Truck Drive & Rail Clamp Engine (Sec. "H-H") See Dwg. C-2685-15
All Windows In Engine House To Be Glazed With ¼ Ribbed Wire Glass, Except Door Pane To Be ¼ Polished Wire Glass.
All Windows In Operator's Cab To Be ¼ Shutter Proof Safety Glass.
350 Ton Hammerhead Cranes.
New York & Norfolk
Contract No. 5341 - Spec. 8979.
Scale ¾ Inches To One Foot
C-2685-8
Heyl & Patterson, Inc.
Contracting Engineers
Pittsburgh, U.S.A.
General Arrangement Of 15 Ton Revolving Crane On Top Of 350 Ton Crane.
For U.S. Navy Department.
C-2685 - One Crane For New York
C-2686 - One Crane For Norfolk
117431
PW# 86253

GLOSSARY AND ABBREVIATIONS

GLOSSARY AND ABBREVIATIONS

15 LT Crane	A 15 long ton (LT) capacity rail-mounted fixed-jib rotating boom crane. This crane is supported on rails along the top of the 350 LT Crane Boom truss. In some reference documents, this crane is also referred to as "15-TON Crane" or "Crane #111".
25 ST Crane	A 25 short ton (ST) capacity rail-mounted bridge crane inside the 350 LT Crane machinery house. The 25 ST Crane is a part of the 350 LT Crane. In some reference documents, this crane is also referred to as "25 ST Service Crane" or "Crane #110".
350 LT Crane	A 350 LT capacity tower crane. The 350 LT Crane consists of the boom, tower and foundation. Refer to Attachment 3 for additional information. In some reference documents, this crane is also referred to as "350 Ton Hammerhead Crane" or "Crane #110".
ACM	Asbestos Containing Materials
AHERA	Asbestos Hazard Emergency Response Act of 1986
AIHA	American Industrial Hygiene Association
AISC	American Institute of Steel Construction
ASD	Allowable Strength Design
Base	The lower, non-rotating portion of the 15 LT Crane. Also referred to in some reference documents as the "traveling base".
Batter Piles	Piles driven at an inclination to the vertical to provide resistance to horizontal forces. Batter piles supporting the crane foundation have a slope of 5 Horizontal to 12 Vertical (5H:12V).
Boom	The rotating structure of the 350 LT Crane above the slew ring. The boom consists of the structural truss, three trolleys, hoist and drive machinery, and electrical components. Refer to Attachment 3 for additional information.
CFR	Code of Federal Regulation
EMT	Electrical Metallic Tubing
Festooning	System of cables, metal suspension and electrical connections that provide electrical power for machinery traveling back and forth in a straight line.

Finite Element Analysis	A mathematical method for analyzing the physics of a system such as a structure. The method involves discretizing the system into elements and applying equations that relate the elements to one another. Refer to textbooks for a more in depth explanation.
FJB	Festoon Junction Box
Foundation	The structural system that transmits loads from the tower and cranes to the soil. The Hammerhead Crane Foundation is comprised of an octagonal bowl shape reinforced concrete slab supported on vertical and batter timber piles.
HA	Homogeneous Areas
Hammerhead Crane System	The Hammerhead Crane System is comprised of the 350 LT Crane and the 15 LT Crane. Refer to Attachment 3 for additional information.
HUD	United States Department of Housing and Urban Development
HVAC	Heating Ventilation & Air Conditioning
King Pin	A vertical pin connecting the rotating portion of the crane with a non-rotating lower portion such as the tower, for the 350 LT Crane, or "Base" for the 15 LT Crane.
LCP	Lead-Containing Paint
LRFD	Load and Resistance Factor Design
LT	Long Ton or 2,240 pounds
mg/cm^2	Milligrams per centimeter squared; unit of measure utilized for hazardous materials' surveys.
mg/kg	Milligrams per kilograms; unit of measure utilized for hazardous materials' surveys.
MILCON	Military Construction
NESHAP	National Emissions Standard for Hazardous Air Pollutants Act of 1973
NVLAP	National Voluntary Laboratory Accreditation Program
OSHA	Occupational Safety and Health Administration
PCB	Polychlorinated Biphenyls
PLM	Polarized Light Microscopy

Pipe Softener	A piece (i.e. half or quarter section) of pipe that is put between a wire rope and a sharp edge to reduce the stress concentration at a rope turn by providing a radius.
Pitch Pocket	Sheet metal pan used in roofing to prevent entry of moisture where equipment or structural members penetrate the roof. Traditionally, the pan is filled with pine tar pitch which softens and flows to heal itself during hot weather. Pitch pockets are not generally used in new construction at this time.
ppm by weight	Parts per million by weight, unit of measure utilized for hazardous materials' surveys.
Slew Ring	A system of structural members, bearing surfaces, rollers, pinion gears, ring gears, and drive motors that allow the boom and machinery house of the crane to rotate relative to the crane tower.
Slip Ring	An assembly for conducting electrical power and control through a rotating joint. The slip rings are concentric with the center of rotation of the upper crane portion. These are comprised of a stack of circular armatures in contact with brushes to transmit electricity.
Spider	An assembly of structural members that support the slew ring rollers.
Spud Lock	A device use to prevent boom rotation or crane translation. The spud lock includes the spud, a vertically oriented beam, a lifting device to engage and disengage the spud, a fitted space on the fixed structure and a fitted space on the movable structure for the spud. When the spud is engaged, it passes through the fitted space in both structures locking them into position relative to each other.
ST	Short Ton; 2,000 pounds. Also referred to as "Ton".
TEM	Transmission Electron Microscopy
Ton	2,000 pounds
Tower	The structural system that supports the cranes and machinery houses, elevator and utility services. It transmits structural loads to the foundation. The tower is comprised of vertical, horizontal and diagonal structural steel members with gusset plates, rivets and appurtenances.
TSCA	Toxic Substances Control Act of 1976
UFGS	Unified Facilities Guide Specifications
USEPA	United States Environmental Protection Agency
µg/g	Micrograms per grams; unit of measure utilized for hazardous materials' surveys.

ATTACHMENT 1
Roles and Responsibilities

Attachment 1 – Roles and Responsibilities

Type of Work or Specific Area of Work	Firm Affiliation	Key Personnel
Project Manager	NAVFAC MIDLANT	Andrew Ganey
Facility Management Specialist	NAVFAC MIDLANT	Matt Kiefer
Site Safety Manager	NAVFAC MIDLANT	Michael Dejaeger
Regional Historic Preservation Officer	NAVFAC MIDLANT	Heather McDonald
Contract Specialist	NAVFAC MIDLANT	Crystal Godwin
Text Assembly, Formatting and Preparation for Printing	STV Inc.	Jennifer Burnett Joseph Miller Joseph Remson
Editing, Text Ordering	STV Inc.	Jennifer Burnett Joseph Remson Joseph Schuchman
Attachment 1 – Roles and Responsibilities	STV Inc.	Joseph Miller
Attachment 2 – Site Investigation Details	STV Inc.	Kevin Brady Douglas Glorie Neil Haner Joseph Miller Joseph Remson Joseph Schuchman Kevin Wade Juan Zapata
	Liftech	Derrick Lind Robert Slater Erik Soderberg
	Crawford Consultants	Brandon Bilak
	Moffatt & Nichol	David Cortinas John Gaul
	Source 1	Daniel Brunn
Attachment 3 – Detailed Basis of Analysis		
3-1 – Boom	Liftech	Derrick Lind Robert Slater Erik Soderberg
3-2 – Tower	STV Inc.	James Cardillo Scott Chambers Neil Haner
3-3 – Tower	Moffat & Nichol	Reza Alamir Mehedi Rashid

Attachment 1 – Roles and Responsibilities

Type of Work or Specific Area of Work	Firm Affiliation	Key Personnel
Attachment 4 – Boom Calculation Details	Liftech	Derrick Lind Erik Soderberg
Attachment 5 – Boom to Tower Interface Loads	Liftech	Derrick Lind
Attachment 6 – Tower Calculations Details	STV Inc.	Neil Haner
Attachment 7 – Tower to Foundation Interface Loads		
7-1 – Tower Loads to the Foundation	STV Inc.	Neil Haner
7-2 – Re-Orientation of Loads for Analysis of Foundation	Moffatt & Nichol	Reza Alamir
Attachment 8 - Foundation	Moffatt & Nichol	Reza Alamir Mehedi Rashid
Attachment 9 – 15 LT Crane	Liftech	Robert Slater
Attachment 10 – Project Alternatives, Cost, Life Cycle Cost Analysis, Schedule		
10-1 – Mothball Alternative		
10-1-1 – Cost Details	Crawford Consulting	Brandon Bilak
10-1-2 – Life Cycle Cost Analysis	STV Inc.	Joseph Miller
10-1-3 – Schedule Details	STV Inc.	Bob Quickel
10-1-4 – Alternative Details	Liftech	Derrick Lind Robert Slater Erik Soderberg
	STV Inc.	Kevin Brady Douglass Glorie Joseph Miller Joseph Remson Joseph Schuchman Kevin Wade
10-2 – Demolition Alternative		
10-2-1 – Cost Details	Crawford Consulting	Brandon Bilak
10-2-2 – Life Cycle Cost Analysis	STV Inc.	Joseph Miller

Attachment 1 – Roles and Responsibilities

Type of Work or Specific Area of Work	Firm Affiliation	Key Personnel
10-2-3 – Schedule Details	STV Inc.	Bob Quickel
10-2-4 – Alternative Details	Liftech	Derrick Lind Robert Slater Erik Soderberg
	STV Inc.	Kevin Brady Douglass Glorie Joseph Miller Joseph Remson Joseph Schuchman Kevin Wade
Attachment 11 – Detailed List of Salvageable Materials and Machinery	Liftech	Robert Slater
Attachment 12 – Matrix of Permit Agencies	STV Inc.	Robert Briggs
Attachment 13 – Cultural Resource Documentation	STV Inc.	Joseph Schuchman
Attachment 14 – Limited Hazardous Materials Report	STV Inc.	Douglass Glorie Juan Zapata
Attachment 15 – Existing Documents	STV Inc.	Neil Haner Joseph Miller

ATTACHMENT 2
Site Investigation Details

ATTACHMENT

Table of Contents

Attachment 2 – Site Investigation Details

Table 2-1 – Boom Site Visit Findings
Table 2-2 – Tower Site Visit Findings
Table 2-3 – Foundation Site Visit Findings
Table 2-4 – 15LT Crane Site Visit Findings

Findings from the Preliminary Condition Assessment site visit are shown below. The assessment included accessible portions of the crane and did not involve disassembly or nondestructive testing.

Table 2 - 1: Boom - Site Visit Findings

Item No.	Photo	Observation
Structure		
1.1		Most areas of the structure are in good condition. Minor corrosion was observed, mostly at bolts, some connections, the deck plate and walkways, and at some plate seams. No damage other than corrosion was observed. Measurements of some of the major structural members confirmed their sizes matched those on the construction drawings. Comments on specific structural elements follow.
Truss		
1.2		Most areas of the truss structure are in good condition with some localized corrosion. Typical condition photos are shown at left. Representative photos of observed localized corrosion conditions are shown below.

Table 2 - 1: Boom - Site Visit Findings

Item No.	Photo	Observation
		Bottom chord from below.
		Top chord from above. The rail corrosion is not significant.
1.3		Localized corrosion exists at most bolts that were installed after the original construction. Bolts exist at several locations. The bolt corrosion is not significant unless the rate of corrosion increases significantly.
1.4		Localized corrosion exists at some angle to plate connections. The amount of corrosion is not significant.

Table 2 - 1: Boom - Site Visit Findings

Item No.	Photo	Observation
1.5		Localized corrosion exists at upper plate of top boom truss chords near the 15 LT Crane rail clips. The amount of corrosion is not significant.
1.6	 	Localized corrosion exists at main vertical and diagonal boom truss members at the machinery house flooring. The observed section loss is not significant.
1.7	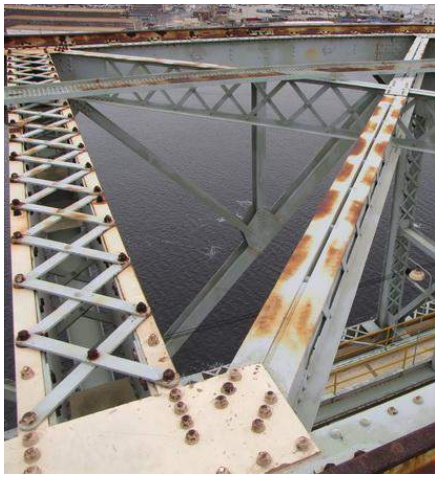	Minor surface corrosion exists at top side of upper cross braces. The corrosion is not significant.

Table 2 - 1: Boom - Site Visit Findings

Item No.	Photo	Observation
Transverse Frames		
	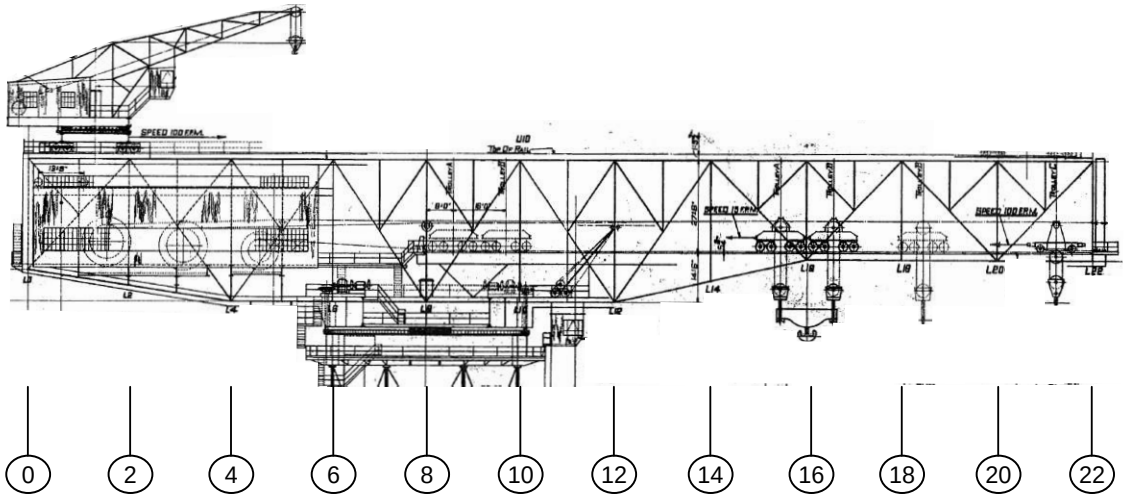	
1.8		The transverse frames are in good condition with some localized corrosion. Transverse Frame 10 – upper portion
1.9		Transverse Frame 10 – lower portion

Table 2 - 1: Boom - Site Visit Findings

Item No.	Photo	Observation
1.10	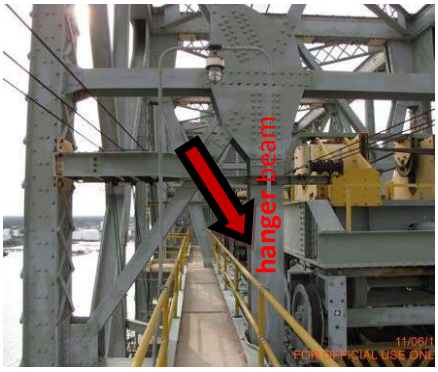	Trolley rail girder hangers
	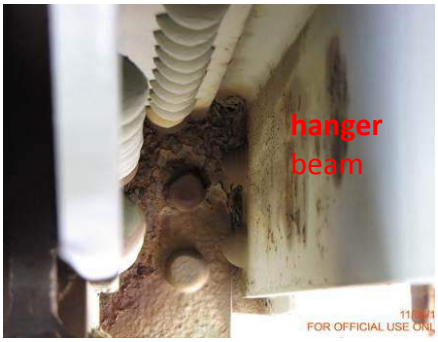	Hanger to rail girder connection. About half of the locations observed had localized corrosion at the bottom of the connection. The amount of corrosion is not significant, as the trolley beam loading is a fraction of the original design load.
Boom Base (i.e., pinion, radial, tread, and kingpin girders; and lattice struts)		
1.11		The boom base is in good condition with some localized corrosion. Corrosion staining that exists at some vent holes in the bottoms of the beams indicates some internal corrosion. The internal corrosion could not be observed, but the amount and severity of corrosion staining and observations of other corrosion indicates it is not severe.
		Example corrosion staining at a vent hole

Table 2 - 1: Boom - Site Visit Findings

Item No.	Photo	Observation
1.12		Localized corrosion exists at some bottom flange beam connections. This corrosion is not significant.
1.13		Some localized corrosion was observed along the bottom edge of the spud lock support structure on the boom and some corrosion staining at vent holes.

Table 2 - 1: Boom - Site Visit Findings

Item No.	Photo	Observation
Machinery House		
1.14		The machinery house structure is in good condition, except for some localized corrosion due to water intrusion. Localized corrosion has occurred at the floor deck plate and at some of the truss members that penetrate through the deck plate. Refer to the "Truss" section above for this structure. See below for the machinery house structure.

Table 2 - 1: Boom - Site Visit Findings

Item No.	Photo	Observation
1.15		Localized corrosion exists at some areas of the machinery house floor deck plate. Similar corrosion exists at several locations. This corrosion is not significant to the primary structure but could become a hazard for personnel.
Spud Lock		
1.16		The spud lock is engaged and in good condition. Minor localized corrosion exists on the spud lock scissor lift mechanism. The corrosion is not significant. View of scissor lift mechanism from above
1.17		Spud lock portion between boom and tower sockets.

Table 2 - 1: Boom - Site Visit Findings

Item No.	Photo	Observation
		Bottom of spud lock projecting through tower socket
Spider Structure, King Pin, and Rollers		
1.18		The spider structure and rollers are in good condition with some localized, minor surface corrosion. The spider structure includes the upper radial beams in this photo.
1.19		Close-up of spider at King Pin. It is not known if the mound below the spider is corrosion, grease, or both. No corrosion staining observed.
		View of roller ring from the center of the spider looking outward. No corrosion staining observed.

Table 2 - 1: Boom - Site Visit Findings

Item No.	Photo	Observation
		View of Boom Base and Roller Ring from exterior
Trolley Runway		
1.20		The trolley runway structure is in good condition. Little corrosion was observed.
Trolley Structures		
1.21		The trolley structures have limited localized corrosion. Corrosion is mostly limited to pins, bolts, and some surface corrosion and is not significant. Surface corrosion of bumper and housing, and wheel axle

Table 2 - 1: Boom - Site Visit Findings

Item No.	Photo	Observation
		Corrosion of pins and bolts, and localized corrosion on equalizer structure
Crane Mechanical and Electrical Systems		
Lifting Equipment		
1.22	The crane lifting equipment, including wire rope, sheaves, and other lifting equipment, is in reasonably good condition. Some corrosion at bearings and wire rope was observed. Descriptions of component conditions follow.	
1.23		The crane hook blocks are in good condition, although they do not comply with current regulatory requirements, e.g., lack of hook guards. These three hook blocks are prime candidates for salvage.

Table 2 - 1: Boom - Site Visit Findings

Item No.	Photo	Observation
1.24		Wire rope sheaves show little wear or corrosion, and appear to have many hours of life remaining. Although this assessment did not permit the disassembly of the sheave bearings, we expect that the sheaves and sheave pins are in excellent condition. All 1 ½ inch rope sheaves are prime candidates for salvage.
1.25		Wire ropes for Trolley A, B, and C hook blocks have lost their protective lubrication and are corroding in areas exposed to the weather. Inside the machinery house, the rope remains lubricated and is in good condition.
Machinery		
1.26	The machinery components, including the three hoist mechanisms and the two slewing mechanisms, are in good condition with minimal wear and corrosion. The observed condition of portions of the inside of electric motors and enclosed gear reducers indicates minimal corrosion. The machinery is expected to be restorable to an operable condition with limited effort. Descriptions of component conditions follow.	
1.27		Hoisting machinery A and B, are in good condition. The components show minimal wear and corrosion. We expect this hoist assembly could be made functional with limited maintenance repair and restoration. These machinery components are prime candidates for salvage.

Table 2 - 1: Boom - Site Visit Findings

Item No.	Photo	Observation
1.28		Hoist C is in good condition. Wear and corrosion are minimal. We expect this hoist assembly could be made functional with limited maintenance repair and restoration. These machinery components are prime candidates for salvage.
1.29		Hoist gearing is in good condition and has little or no corrosion. Water from condensation is not visible in the enclosed reducers, and open gears (shown here) continue to be adequately protected by their lubrication. Tooth profiles show only slight to moderate wear.
1.30		Hoist friction brakes are in good condition. The hook load on the reeving system and resulting required braking force is only a fraction of the rated braking capacity. The hoist friction brakes provide the only support for all hook blocks. The braking force is provided by a spring inside each brake assembly which presses the pads against the brake wheel. The springs are embedded in the middle of the brake mechanism and are difficult to inspect. See second image.

Table 2 - 1: Boom - Site Visit Findings

Item No.	Photo	Observation
	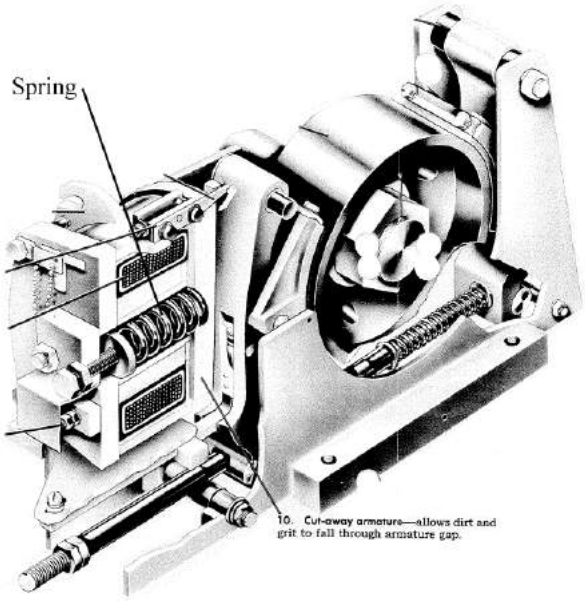	
1.31		The slew machinery, consisting of two identical mechanisms at diagonally opposite locations on the slew ring gear, is in good condition despite being outside. Enclosed gearing has little wear and no corrosion. Open gearing has little wear and minor corrosion on the pitch line where the grease had been removed by contact.
1.32		The slew ring gear and spur pinions are in good condition. Tooth profiles remain essentially full form. Corrosion is limited and isolated to the tooth pitch line.
		The ring gear is firmly secured to the base structure and shows no evidence of movement.

Table 2 - 1: Boom - Site Visit Findings

Item No.	Photo	Observation
Electrical System		
1.33	The electrical system can be separated into two distinct systems: • direct current (DC) crane motion and control system • alternating current (AC) for support systems (e.g., lighting and service equipment) The 250 volt DC motion power and control system has been abandoned on the crane and is technically out of date. Many of the contactors and control devices are corroded to the point where they are no longer functional. We do not believe that this system can reasonably be made operable. The mill motors remain in good condition and have been well maintained. The AC system is operational in many areas; the walkway lighting, machinery house lighting, operator's cab, service receptacles, and some space heaters remain energized and functional. With some maintenance this system can remain in operation.	
1.34	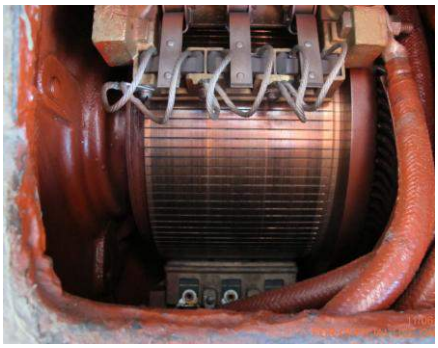	Hoist and other motors appear to be in good condition and appear to have recently been cleaned and baked.
25 ST Service Crane		
1.35		The crane is in reasonable condition with slight corrosion on the exterior. There was no power to the crane.

Table 2 - 1: Boom - Site Visit Findings

Item No.	Photo	Observation
1.36		The hook block appears to be in good condition. It appears that the only modification applied in the 1980 mechanical refurbishment was the addition of the hook safety latch, which is wired in the released position.
1.37		The trolley is in good condition and could be made operable with a major refurbishment. Significant mechanical repairs and replacements were made to the gearing and other trolley components during the 1980 crane refurbishment.
1.38		The hoist machinery is basic and sound. Maintenance records report gearing vibration that was reportedly corrected during the 1980 refurbishment. Lack of use and corrosion would require a tear down and refurbishment to make it operable.

Table 2 - 1: Boom - Site Visit Findings

Item No.	Photo	Observation
1.39		Crane electric power and control is provided through a 250 VDC drive. The panels are intact, but the electrical components have twenty years of corrosion. The electrical drive system is likely not operable, and would require replacement to become operational.

Table 2-2: Tower - Site Visit Findings

Item No.	Photo	Observation
Structure		

Slew Ring

Steel members and connections at the slew ring appeared to be in serviceable condition. No major instances of corrosion were found, nor did there appear to be significant erosion of surface coatings. At some connections, and in undrained corners, minor surface rust was observed.

No Rivets Were Observed to be Missing or Damaged

Tower Structural Elements

Primary structural elements were found to be in overall serviceable condition. No major instances of corrosion were found, nor did there appear to be significant erosion of surface coatings.

Minor surface rust was found at numerous connection points and at the edges of butted members. This minor corrosion occurred at approximately 30% of observed connection points.

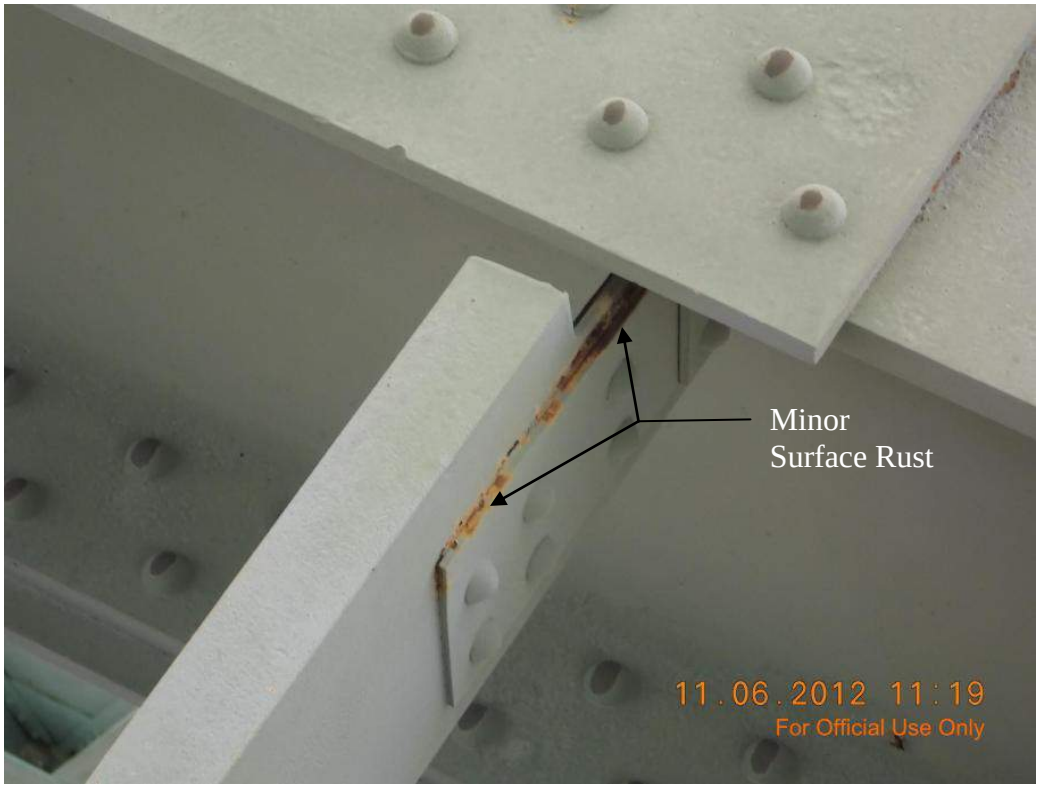

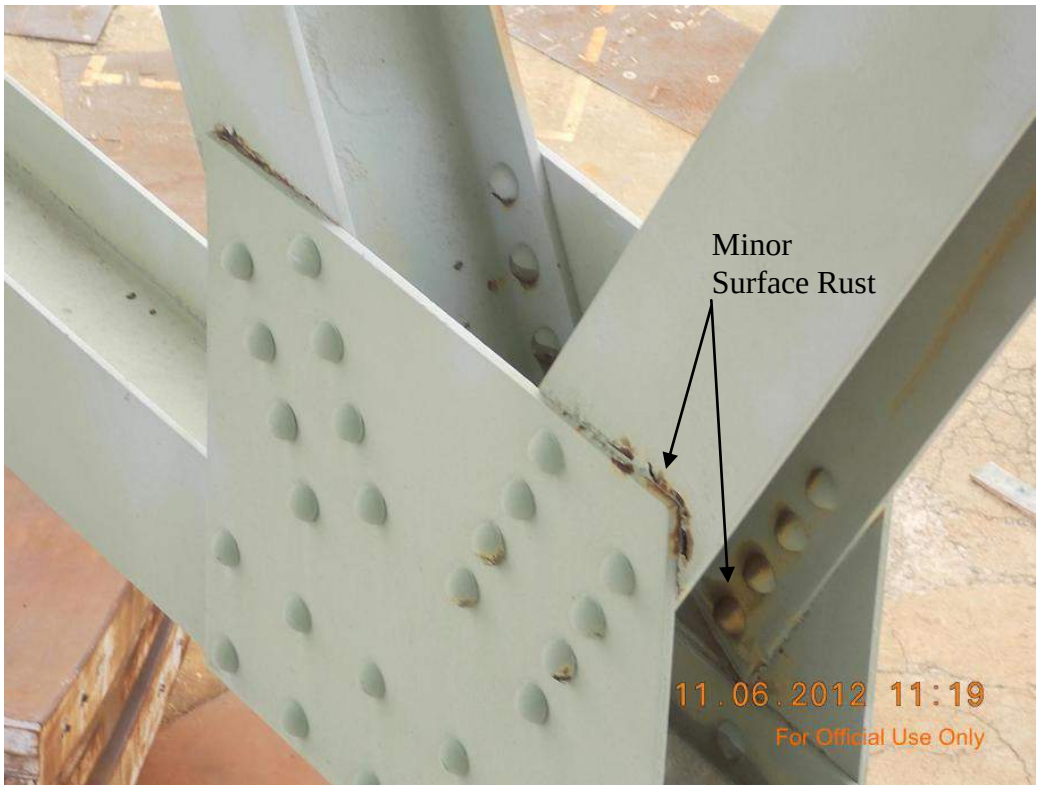

No Rivets Were Observed to be Missing or Damaged

Column Bases

All steel at the column bases appeared to be in good condition, with the exception of small amounts of surface rust at the interfaces between the column and base plates.

Surface Rust at the Interfaces between the Column and Base Plates

Stairs and Elevators

Major rust issues were found at various locations in the stair assemblies. Railing post bases are delaminated in many cases, leading to a potentially unstable condition. In addition, corrosion is occurring between the kick plate and the platforms or stair treads.

Railings were measured to a height of 3’-6” with an intermediate horizontal bar, meeting OSHA requirements for walkway railings.

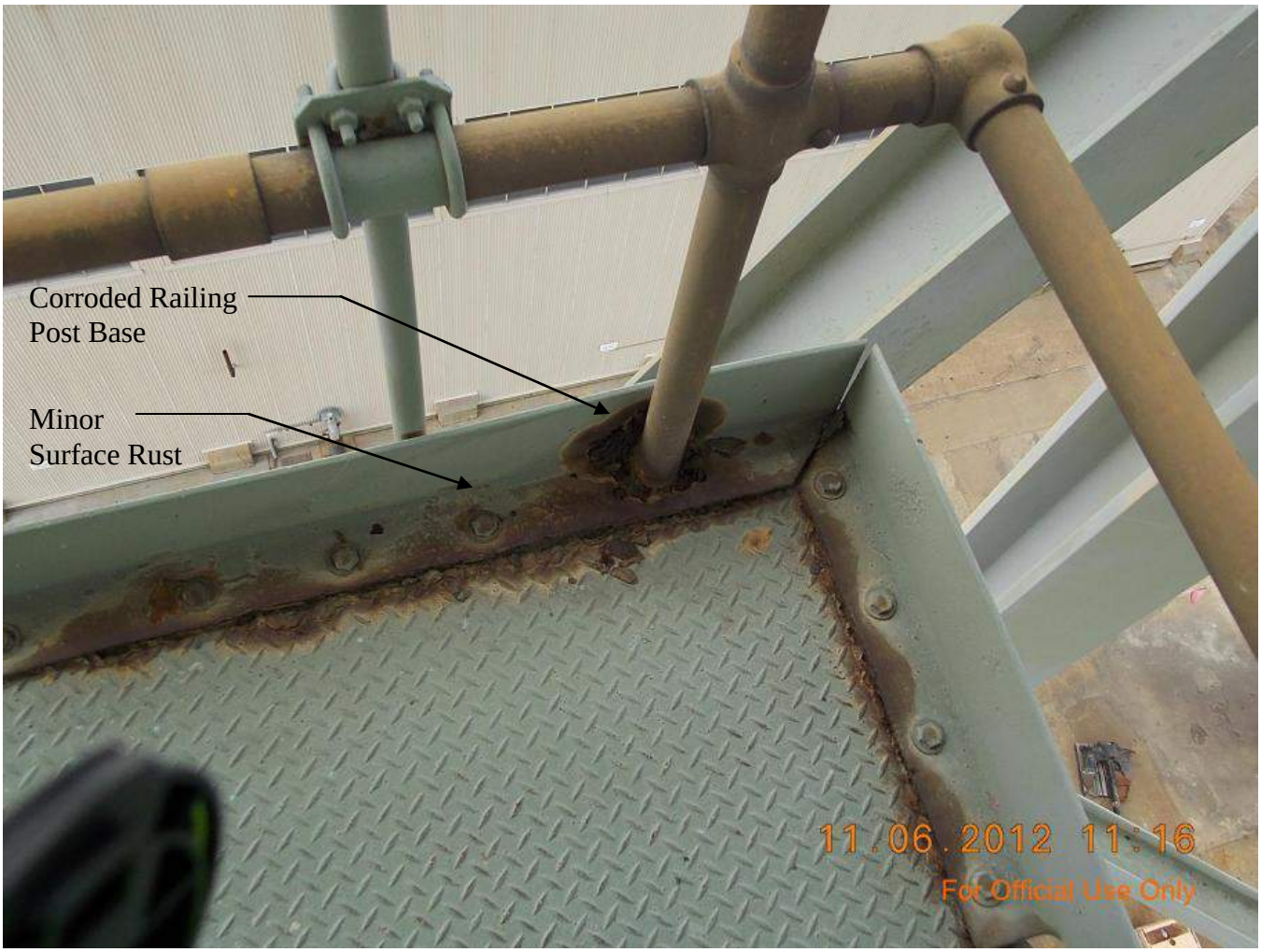

Delaminated Railing Post Bases

The elevator tower is in serviceable condition, although surface rust is occurring at connections and at the base where water has been able to accumulate. In some cases, some anchor bolts may be suffering from a loss of cross sectional area due to the corrosion (see photo).

Anchor Bolts may be Suffering from a Loss of Cross-Sectional Area

Table 2-3: Foundation - Site Visit Findings

Item No.	Photo	Observation
Structure		

On November 8, 2012 M&N completed a visual inspection of the concrete foundation cap. No apparent sign of concrete foundation distress was recorded. As a result, the foundation analysis assumed that the structural material properties and strength of the concrete are not degraded from the time the foundation was built. Figure 1 shows a typical condition of the pedestals at the crane column base.

Figure 1: Visible Foundation Pedestal at a Crane Column Base (Typical)

Timber Piles

The existing timber piles for the foundation were not visually inspected.

As shown in Figure 1 below, which is taken from record Drawing Number P.W. 20704, dated May 19, 1944, the existing wharf supporting the Hammerhead Crane foundation is a closed wharf type structure. As seen in the section, the elevation of the bottom of the cap is 92.50' (NNSY datum). The elevation of the MLLW at NNSY is 93.29' (NNSY Datum). Given the above, the following conclusions can be made:

- All timber foundation piles are more or less entirely below MLLW, and
- Given that the wharf is closed faced, the piles are fully buried in soil.

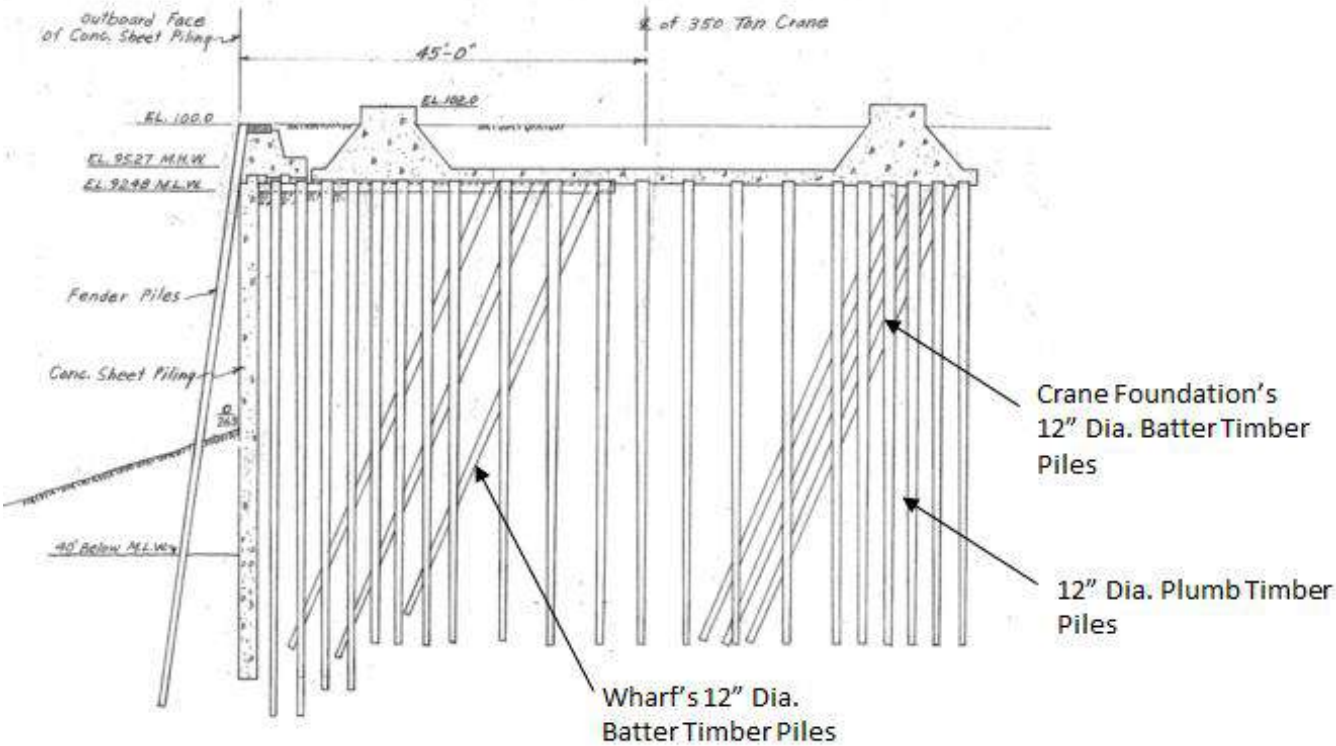

Figure 1: Crane Foundation Section (Looking South)

Since the timber piles are embedded into the ground, it is likely that the piles are in relatively good shape without much time dependent degradation. Also, based on M&N experience from inspecting waterfront timber structures in the past, timber piles under similar environmental and exposure conditions do not suffer excessive degradation. Therefore, given the age of the structure, exposure and environmental conditions, and based on past experience, a radial degradation of timber piles of ½" all around is conservatively assumed for the foundation pile strength analysis. However, a radial degradation of 1" is also considered for the purpose of sensitivity check.

Table 2-4: 15 LT Crane - Site Visit Findings

Item No.	Photo	Observation
Structure		
4.1	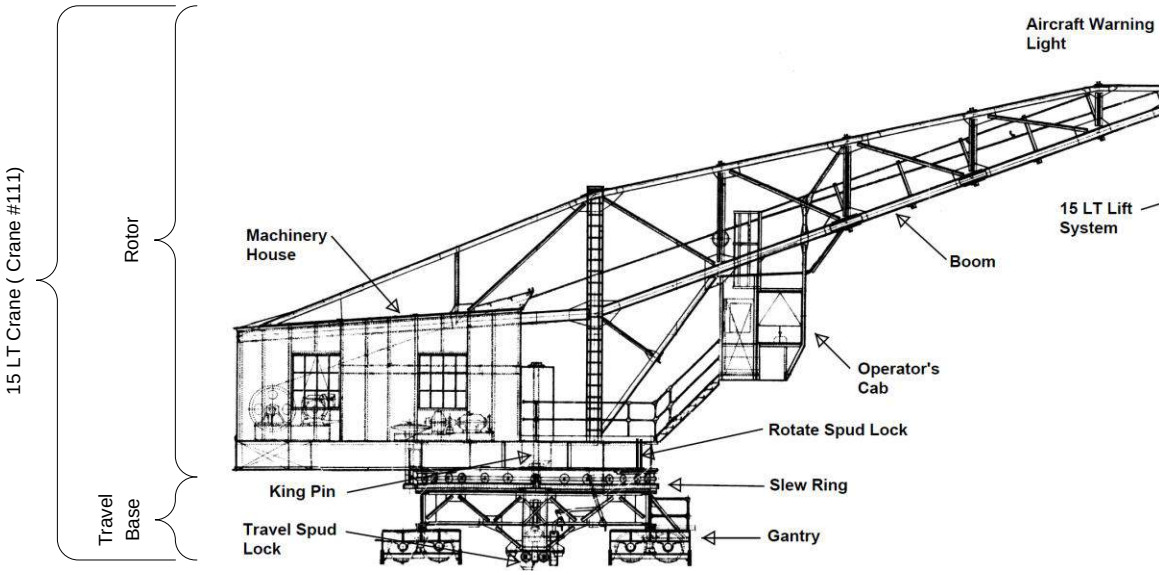	The 15 LT crane structure is in good condition, except for localized corrosion at the spider structure, the lower flanges of the travel base longitudinal beams, and the floor deck structure near the door and rear of the machinery house. Comments on specific structural elements follow.
Truss		
4.2		The boom truss is in good condition with little, minor corrosion.

Table 2-4: 15 LT Crane - Site Visit Findings

Item No.	Photo	Observation
Travel Base and Wheel Assemblies		
4.3		The Travel Base is in good condition. There is some corrosion at bolts and pins, and some localized corrosion at the longitudinal roller support beams.
		Rear transverse beam. Machinery house above.

Table 2-4: 15 LT Crane - Site Visit Findings

Item No.	Photo	Observation
		Inside of Travel Base
		Localized corrosion at pins of wheels and equalizer beams
4.4		Localized corrosion of interior of bottom flange of longitudinal beam. The corrosion area is about ten square feet for both beams. This corrosion is currently not significant but the rate of corrosion and potential for future corrosion is a concern.
Machinery House		
4.5		The machinery house structure is in good condition with some light surface corrosion. The deck plate is significantly corroded at some locations. See below.

Table 2-4: 15 LT Crane - Site Visit Findings

Item No.	Photo	Observation
4.6		Significant localized corrosion of floor deck plate on the platform in front of the machinery house near the door. The decking plate is completely corroded through at some locations.
4.7	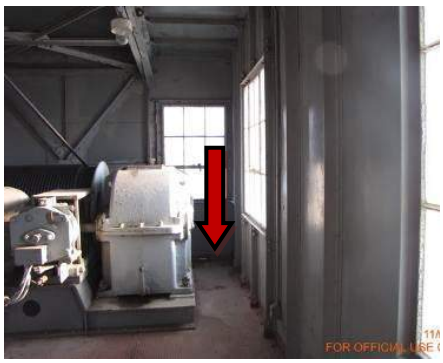	Significant corrosion at floor deck plate near right and left rear of machinery house. The decking plate is completely corroded through at some locations.

Table 2-4: 15 LT Crane - Site Visit Findings

Item No.	Photo	Observation
King Pin		
4.8		King Pin above spider ring
		King Pin below spider ring
Spider Structure and Rollers		
4.9		See below for water in center ring and spider rod corrosion.

Table 2-4: 15 LT Crane - Site Visit Findings

Item No.	Photo	Observation
		Interior view of spider rods, roller ring, and rollers
		Exterior view of rollers and roller ring
4.10		The center ring is full of water. Water is likely entering the center ring through the corroded deck plate above. Many spider rods have localized corrosion near the center ring. As the forces in the spider assembly are small for the mothball condition, the observed corrosion of these components is not significant.

Table 2-4: 15 LT Crane - Site Visit Findings

Item No.	Photo	Observation
Crane Runway		
4.11		The 15 LT Crane runway rail and rail clips have localized corrosion. The rail is supported by the upper boom truss chords. See the "Boom" and its "Truss" subsection above for a description of the boom's truss structure condition.
Crane Mechanical		
4.12	The 15 LT Crane reeving and machinery system remains in good condition. Components protected from the environment by the machinery house, under the machinery house, and within machinery enclosures have been reasonably protected from corrosion by their remaining lubrication film. There is no apparent damage to any machinery component and the level of wear is surprisingly low for their age. We anticipate that these machinery components could be made operable following an inspection and moderate rebuild of bearings and other internal components. As a result, much of these present candidates for salvage reuse.	

Table 2-4: 15 LT Crane - Site Visit Findings

Item No.	Photo	Observation
Travel Spud Lock		
4.13		Travel spud lock on left side of crane is engaged and in good condition.
Rail Clamp		
4.14	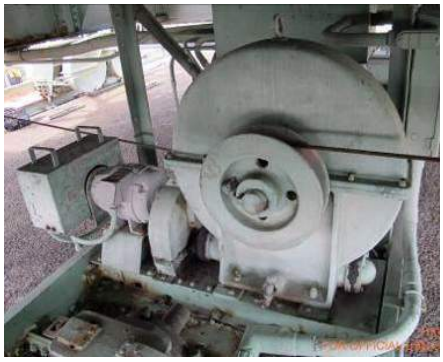	Traveling rail clamp raise mechanism remains in reasonably good condition. This mechanism is used to release the weight-applied rail clamps. Those components of the mechanism that could be accessed without disassembly were in good condition.

Table 2-4: 15 LT Crane - Site Visit Findings

Item No.	Photo	Observation
		The counterweight rope of rail clamp system is corroded. Ropes of both left and right systems are corroded. The corroded ropes are only used to disengage the rail clamp, and are therefore not required for the mothball condition.
4.15	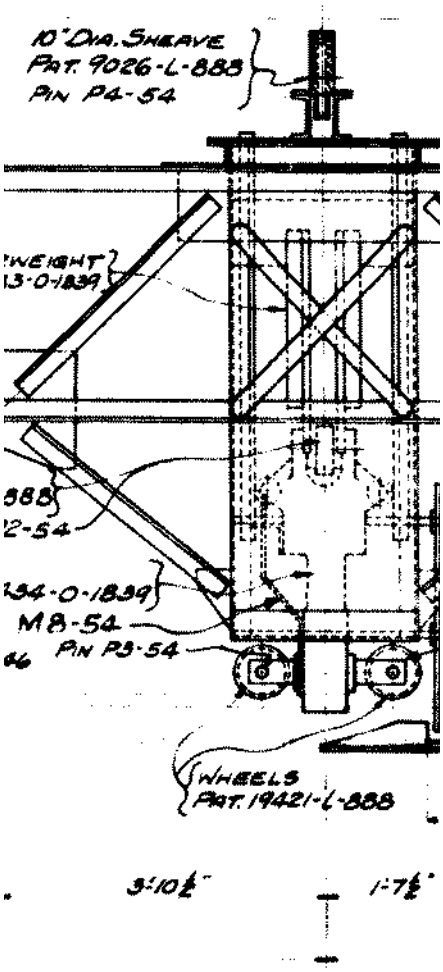	Rail clamp system is engaged but its capacity could not be verified without substantial disassembly of the clamp mechanism. While it appears that the clamps are being forced against the sides of the rail, the condition of the clamping and rail surfaces in this area could not be determined.

Table 2-4: 15 LT Crane - Site Visit Findings

Item No.	Photo	Observation
Rotate Spud Lock		
4.16		The rotate spud lock, which prevents slewing, is engaged and in good condition.

Table 2-4: 15 LT Crane - Site Visit Findings

Item No.	Photo	Observation
Lifting Equipment		
4.17		The hook block appears to be in good condition. Close observation and disassembly were not possible for this assessment.
		The boom tip sheave and dead-end assembly appear to be in good condition. Close observation and disassembly were not possible for this assessment.
Machinery		
4.18		The hoist machinery remains in good condition. Many components of this hoist machinery, e.g., motor, brakes, and reducer are interchangeable with the 350 LT Crane hoist machinery. This assembly is a prime candidate for salvage.
4.19		The hoist friction brakes currently provide the only support for all hook blocks. The braking force is provided by a spring inside each brake assembly which presses the pads against the brake wheel. As springs are in the middle of the brake mechanism, they are difficult to inspect.

Table 2-4: 15 LT Crane - Site Visit Findings

Item No.	Photo	Observation
	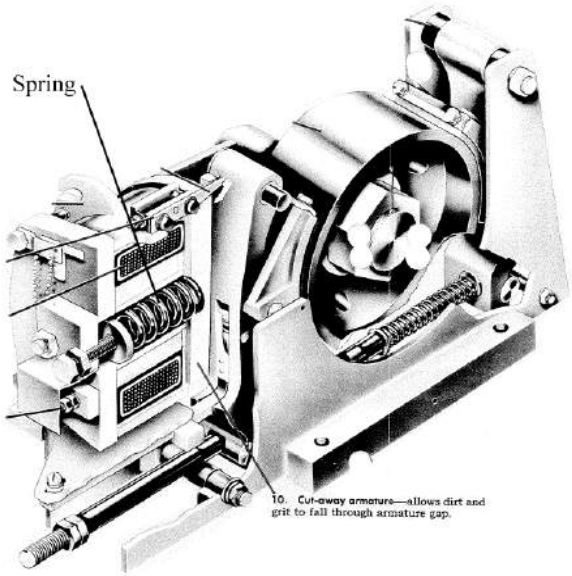	
4.20		Slewing machinery, including the motor, brake, reducer, open bevel pinion, and gear (in round enclosure at near side of photo), remain in good condition and continue to be protected by their lubrication films. Although it may be difficult to find another application, this assembly is a candidate for salvage.
4.21		Slew drive bevel pinion in machinery house is an element of the slew rotation drive discussed above. Note the lubrication protecting the tooth profiles and the limited amount of wear present.

Table 2-4: 15 LT Crane - Site Visit Findings

Item No.	Photo	Observation
4.22		Slew drive ring gear and pinion are in good condition. With limited cleanup and re-lubrication, this drive could be made operable. The ring gear segments have movement relative to one another or to the travel base structure.
4.23	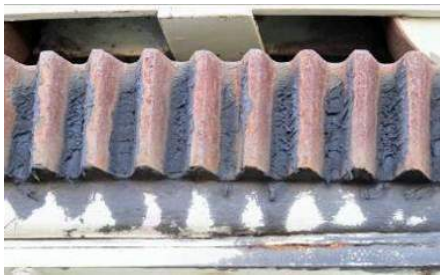	Slew drive ring gear shows slight corrosion in areas exposed to the weather, but robust configurations such as this can continue to operate with the removal of corrosion and re-lubrication.
4.24		The traveling drive machinery is well protected by the gantry structure and machinery platform. Corrosion is slight and those internal components that could be reasonably accessed without disassembly are in good condition. While this assembly may be difficult for reapplication, individual components are expected to possess salvage value.
4.25		Traveling drive to wheel mechanical drives were not observed. Securing of the 15 LT Crane for the travel motion is provided by a combination of motor brakes, the rail clamps, and the translate spud lock.
Electrical System		
The 250 VDC motion power and control system powers hoist, slewing and two travel motors. The system also powers the control logic consisting of limit switches and control operators. This system is not functional and is not in a condition that would justify rehabilitation.		

Table 2-4: 15 LT Crane - Site Visit Findings

Item No.	Photo	Observation
The 220/110 VAC system remains functional. With limited maintenance and repair, most of the services it supports can continue to operate. These include lighting and receptacles. Refer to the 350 LT Crane for additional details.		
4.26	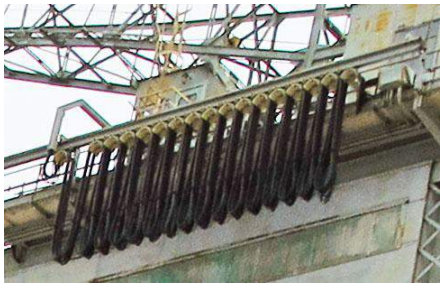	The festoon system , including the cables, supplying the 15 LT Crane is relatively new and remains in good condition. Electrical cables are exposed to the weather and will continue to deteriorate.
4.27	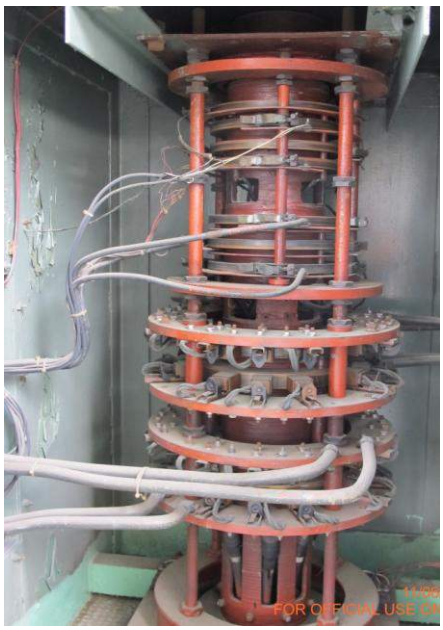	This slip ring assembly is more complex than the 350 LT Crane because of the drive and control connections between the rotating machinery platform, which contains the operator's controls and the traveling, rail clamp, and spud lock systems. The assembly remains in reasonably good condition, but presents an electrical concern because of the numerous exposed connections, some of which are energized and some of which are not. The slip ring is inside an enclosure immediately outside the entry to the 15 LT Crane machinery house door.

ATTACHMENT 3
Detailed Basis of Analysis

ATTACHMENT

Table of Contents

Attachment 3 – Detailed Basis of Analysis
- 3-1 – Boom
- 3-2 – Basis of Design – Tower
  - 3-2-1 – Materials
  - 3-2-2 – Basis of Design Codes
  - 3-2-3 – Basis of Design for Dead and Live
  - 3-2-4 – Basis of Design for Wind
  - 3-2-5 – Basis of Design for Seismic
  - 3-2-6 – ASD Load Combinations Evaluated
  - 3-2-7 – LRFD Load Combinations Evaluated (for Anchor Bolts only)
- 3-3 – Foundation
  - 3-3-1 – Design References: Codes and Standards
  - 3-3-2 – Materials

3-1
Boom

REVIEW CRITERIA
HAMMERHEAD CRANE BOOM AND 15 LT CRANE

BASIS

The review criteria are based on the references listed in the Governing Specifications section below.

UFC 3-301-01 is based on the 2009 International Building Code (IBC2009). IBC2009 incorporates by reference ASCE7-05. The loads and combinations shown below are based on the definitions in ASCE7-05 with the basic wind speed and seismic parameters taken from Appendix E of UFC 3-301-01. UFC 3-301-01 refers to UFC 3-310-04 for seismic design. For this project, UFC3-310-04 is only used to obtain the Response Modification Factor (R) used to determine the seismic loading.

GOVERNING SPECIFICATIONS, REFERENCES

1.	American Society of Civil Engineers, ASCE/SEI Standard 11-99, *Guideline for Structural Condition Assessment of Existing Buildings*. Reston, VA: American Society of Civil Engineers, 1999.
2.	American Bridge Company: 350 Ton Hammerhead Crane Drawings, various dates 1939
3.	American Society of Civil Engineers, ASCE/SEI Standard 7-05, *Minimum Design Loads for Buildings and Other Structures*. American Society of Civil Engineers, 2005. For wind and seismic loads
4.	American Institute of Steel Construction, Steel Design Series 15, *AISC Rehabilitation and Retrofit Guide – A Reference for Historic Shapes and Specifications*, AISC, February, 2002. (AISC-15)Federation
5.	American Institute of Steel Construction, Inc, ANSI/AISC 360-05., *Code of Standard Practice for Steel Buildings and Bridges*. Chicago, IL: American Institute of Steel Construction, Inc., 2005. (AISC 360)
6.	Department of Defense, UFC 3-320-07N, *Unified Facilities Criteria – Weight Handling Equipment*, Department of Defense, August 2007. (UFC 320)
7.	Department of Defense, UFC 3-301-01, *Unified Facilities Criteria – Structural Engineering*, Department of Defense, January 31 2012. (UFC 301)
8.	Department of Defense, UFC 3-310-04, *Unified Facilities Criteria – Seismic Design of Buildings*, Department of Defense, May 1 2012. (UFC 310)

GLOBAL AXES USED IN CALCULATIONS

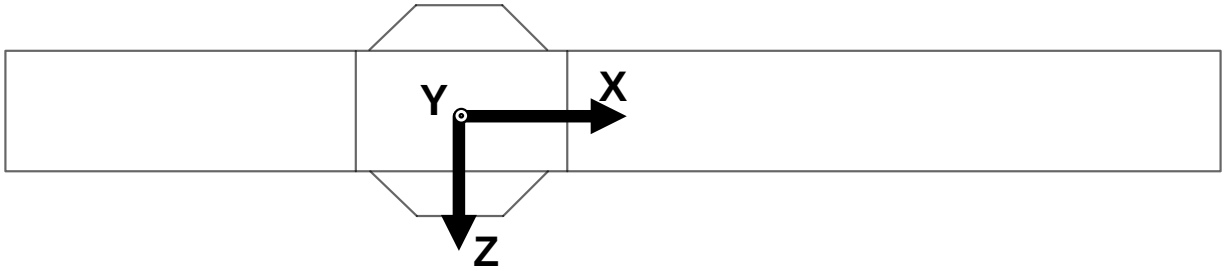

Plan

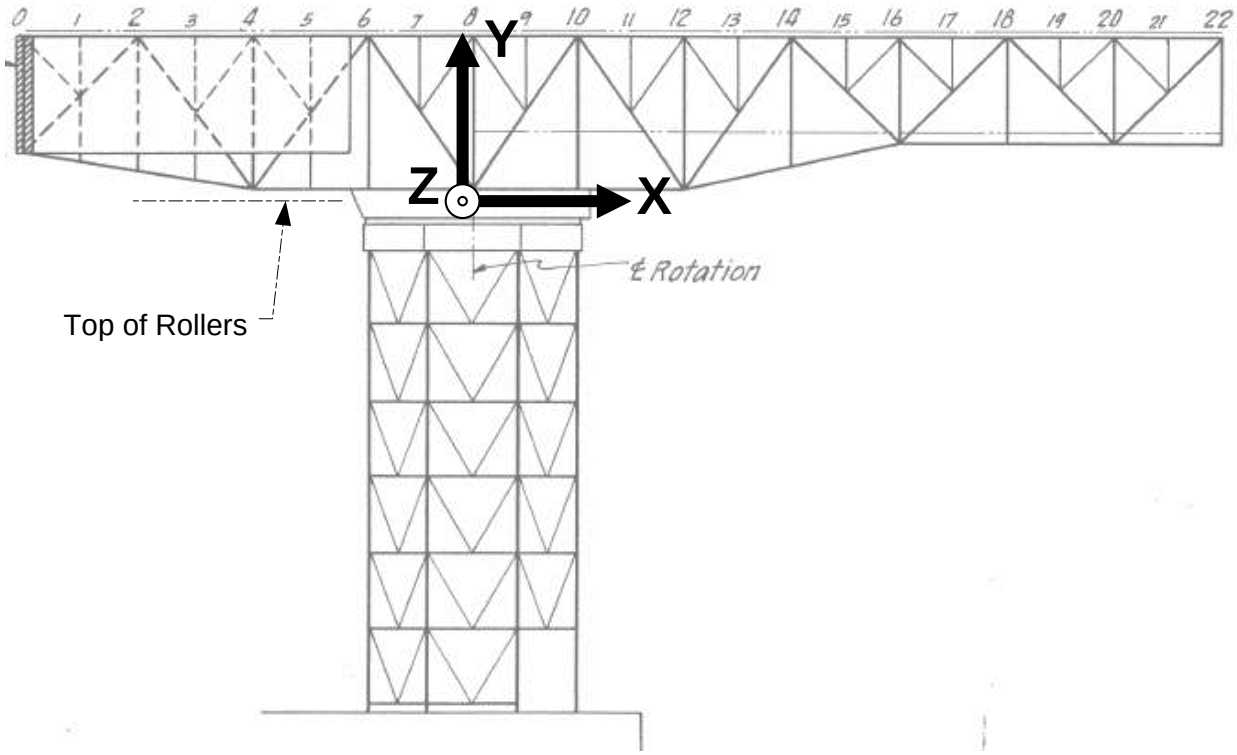

Elevation

BASIC LOADS

Notation	*Load Name*	*Magnitude and Explanation*	*Ref.*
Vertical Loads			
D	Dead Load	The weight of all materials of construction, fixed equipment, e.g., Boom structure (Rotor), counter weight, fixed machinery, machinery house, trolleys, 25ST Service Crane, and 15-LT Crane. DL is based on data in Ref 2.	2
Wind Loads			
W	Stowed Wind Load	The basic wind load determined in accordance with UFC3-301-1 and ASCE7-05 using the parameters shown below.	7&3

Basic wind speed, V	105 mph (Ref 7 Table E-1)
Occupancy Category	II (Ref 7 Table 2-2), confirmed by NAVFAC in STV's November 13 email.
Exposure Category	C z_g=900 ft, α=9.5, z_{min}=15ft

The design wind force, F, shall be:
$F = q_z\ G\ C_f\ A_f$, where

Velocity pressure	$q_z = 0.00256\ K_z\ K_{zt}\ K_d\ V^2\ I_w$(psf)
Velocity pressure coeff.	$K_z = 2.01\ (z/(z_g\ , ft))^{2/\alpha}$ $= 0.478\ z^{0.211}$ (Exp. C) z = height, ft
Topographic factor	$K_{zt} = 1.0$
Directionality factor	$K_d = 0.85$
Gust effect factor	G = 0.85
Force coefficient	C_f -
Projected area	A_f
Importance factor, I_w	1.0

$q_z\ G = 0.00256\ K_z\ K_{zt}\ K_d\ V^2\ G/144000$ ksi
$q_z\ G = 9.747\ z^{0.211}$ (psf) z in ft

At the boom center elev z=170 ft
= 28.8 psf
= 2.00×10^{-4} ksi

Note: C_f and A_f are based on wind tunnel tests for Low Profile container cranes with large truss booms. Refer to the calculations.

Earthquake Loads

E	Earthquake Load	The basic seismic load determined in accordance with UFC3-301-1 and ASCE7-05 Equivalent Lateral Force Analysis using the parameters below.

Occupancy Category	II (Ref 7 Table 2-2)
Importance factor, I_e	1.0 (Ref 7 Table 2-2), confirmed by NAVFAC in STV's November 13 email.
Response Modification Factor	R=3.0 "H. Structural Steel Systems Not Detailed for Seismic Resistance" (Ref 8 Table 2-1) Note: R=3.0 provided Boom does not experience uplift for R=1.0. See load combinations.
Site Class	E (most severe Site Class chosen)
S_S	0.12 (Ref 7 Table E-2)
S_1	0.05
S_{DS}	$0.20 = 2/3 * 2.5 * S_S$
S_{D1}	$0.12 = 2/3 * 3.5 * S_1$

The Seismic Design Category (SDC) is B (Ref 3 Table 11.6-1 and 11.6-2)

Crane Period, T	1.15 s based on Liftech modal analysis. See discussion below.
Seismic Coeff., C_S	$S_{DS}/(R/I_e) = 0.07$ (Ref 3 Eqn 12.8-2)
Max C_S	$S_{D1}/(TR/I_e) = 0.035$ (Ref 3 Eqn 12.8-3)
Min C_S	0.03 (Ref 3 Eqn 15.4-1)
W	Seismic Weight
Base Shear, V	0.035 W = CsW

$E = E_h + E_v$

$E_h = \rho Q_e = 1.0 V = 0.035 W$

$E_v = 0.2 S_{DS} W = 0.04 W$

Discussion on design crane period, T, and modes of vibration:

A period of 1.15 seconds is used for the analysis, and is based on the calculated period for the fourth mode of vibration, lateral translation of the crane. See below. This period and mode is used as the basis for the earthquake design loading because:

1. The mode shape and associated inertia force is expected to be the most significant for the tower loading.
2. The resulting design loading will be conservative.
3. The earthquake loading is small. This approach is not overly conservative for this evaluation.

The first four modes of vibration are provided below:

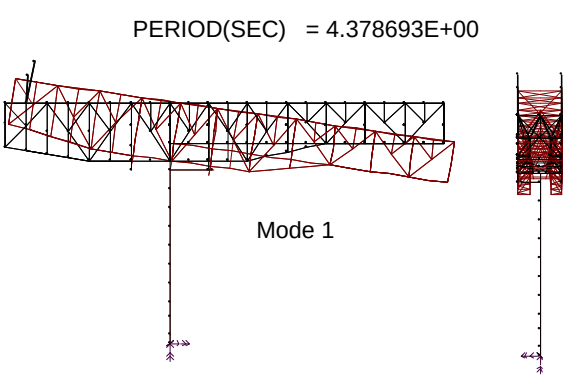

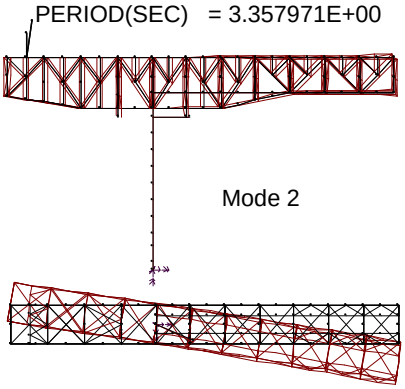

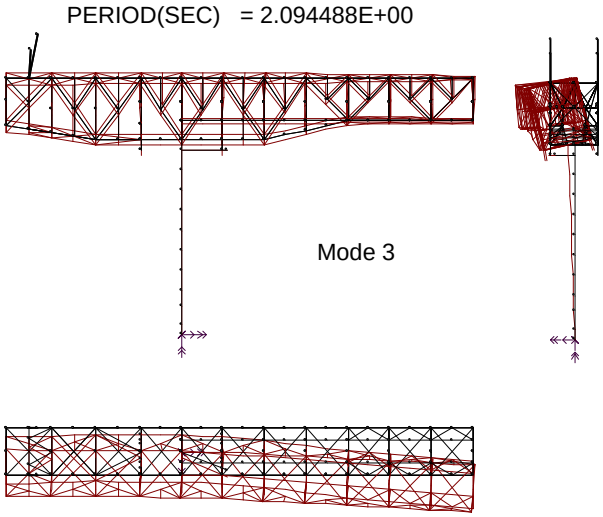

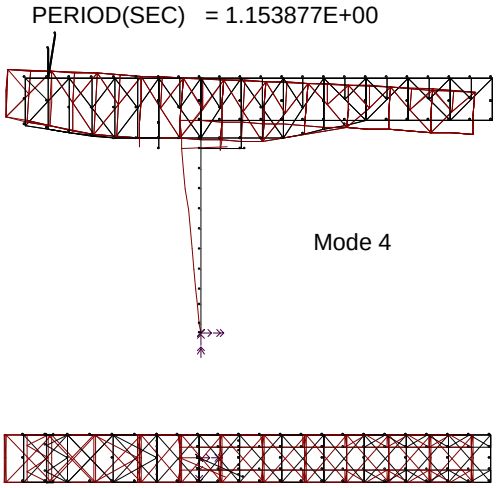

LOAD COMBINATIONS

MEMBER STRENGTH REVIEW
ASCE 7-05 ASD (REF.3 SECTION 2.4)

Condition →		*Wind*		*Seismic*	
Combination Name →		5W ASD	7W ASD	5E ASD	8E ASD
Dead Load	D	1.0	0.6	1.0	0.6
Wind Load Stowed	W	1.0	1.0		
Earthquake Load	E_i			0.7	0.7

Notes:
1. Wind load applied in most severe direction
2. Earthquake loads are applied in two orthogonal directions and at 22.5, 45, and 67.5 degrees to the X direction in plan.
3. R=3.0 for Earthquake without uplift.

ROTOR UPLIFT REVIEW
ASCE 7-05 LRFD

These stability combinations are used to check if the Boom and 15-LT Crane rotors lift from their slew rings due to forces in two orthogonal directions. If uplift occurs, additional stress combinations may be needed to check the tipped or warped rotor.

Condition →		*Wind*	*Seismic*
Combination Name →		7W LFRD	8E LFRD
Dead Load	D	0.9	0.9
Wind Load Stowed	W	1.6	
Earthquake Load	±E		3.0[2]

Notes:
1. Earthquake loads are considered in the orthogonal directions and in angled direction for corner uplift.
2. Equal to R, the Seismic response modification factor.

MATERIALS AND ALLOWABLE STRESSES (REF. 2)

Name	Matl & Strength Data	Source
Carbon Steel	OH Steel Federal Specifications QQ-S-711a Class A [Source 1] F_y = 33 ksi [Source 2,3] F_u = 55 ksi [Source 2,3] Allowable stress (F_{allow}): for tension and maximum for compression: = 0.6 * F_y = 19.8 ksi [Source 4] for shear: = 0.4 * F_y = 13.2 ksi [Source 4]	1. Top Chords; Sheet PW#36513 (Sht 6B of Order H2223 & H2233). 2. Standards and Specifications for Metals and Metal Products, Dept of Commerce, 1933. 3. *AISC Rehabilitation and Retrofit Guide (Design Guide #15)*, AISC, 2002. 4. *Manual of Steel Construction – Load and Resistance Factor Design*, 13th Edition, AISC, 2005.
	Allowable stress shown on existing drawings = 16.0 ksi (Not used for this evaluation.)	Trolley Girders; Sheet PW#36391 (Dwg 6 of Order H-2221-2240)
Silicon Steel	ASTM A94-36 [Source 1] F_y = 45 ksi [Source 2,3] F_u = 80 ksi [Source 2,3] Allowable stress (F_{allow}): for tension and maximum for compression: = 0.6 * F_y = 27 ksi [Source 4] for shear: = 0.4 * F_y = 18 ksi [Source 4]	1. Top Chords; Sheet PW#36513 (Sht 6B of Order H2223 & H2233). 2. *USACE EM 1110-2-6054 Inspection, Evaluation, and Repair of Hydraulic Steel Structures*, December 1, USACE, 2001. 3. Canadian Institute for Steel Construction: Obsolete Structural Steel Grades (2005) 4. *Manual of Steel Construction – Load and Resistance Factor Design*, 13th Edition, AISC, 2005.
	Allowable stress shown on existing drawings = 21.3 ksi (Not used for this evaluation.)	Trolley Girders; Sheet PW#36391 (Dwg 6 of Order H-2221-2240)
Rivets	OH Steel Federal Specifications QQ-S-711a Class C [Source 1] F_y = 28 ksi [Source 2] F_u = 46 ksi [Source 2] Allowable stress (F_{allow}): for tension and maximum for compression: = 15 ksi [Source 3] for shear: = 15 ksi [Source 3]	1. Top Chords; Sheet PW#36513 (Sht 6B of Order H2223 & H2233). 2. *Standards and Specifications for Metals and Metal Products*, Dept of Commerce, 1933. 3. *AISC Rehabilitation and Retrofit Guide (Design Guide #15)*, AISC, 2002.
	Additional data. Not used for this evaluation. ASTM A141-33 is listed as typical for this vintage. F_y = ½ Tensile ≥ 28 ksi F_u = 52/62 ksi	4. *AISC Rehabilitation and Retrofit Guide (Design Guide #15)*, AISC, 2002.
High Tensile Rivets (Not used for this evaluation.)	ASTM A195-36T [Source 1] F_y = 38 ksi [Source 2] F_u = 70-85 ksi [Source 2]	1. Crane Beam Connections; Sheet PW#42884 (Dwg D1 of Order H2223 & H2233). 2. *USACE EM 1110-2-6054 Inspection, Evaluation, and Repair of Hydraulic Steel Structures*, December 1, USACE, 2001.
Note: Basic allowable stresses can be increased by 20% when calculated stresses include secondary stresses due to joint rigidity, i.e. modeling truss joints as fixed connections.		

PROJECT LOCATION (REF: GOOGLE EARTH)

EXCERPT FROM REF 7 (UFC 3-301-01)

\2\

TABLE 2-2 - OCCUPANCY CATEGORY OF BUILDINGS AND OTHER STRUCTURES

Occupancy Category	Nature of Occupancy	Seismic Factor I_E	Snow Factor I_S	Wind Factor I_W	Ice Factor I_i
I	**Buildings and other structures that represent a low hazard to human life in the event of failure, including, but not limited to:** • Agricultural facilities • Certain temporary facilities • Minor storage facilities	1.00	0.8	0.87[a]	0.80
II	**Buildings and other structures except those listed in Categories I, III, IV and V**	1.00	1.00	1.00	1.00
III	**Buildings and other structures that represent a substantial hazard to human life or represent significant economic loss in the event of failure, including, but not limited to:** • Buildings and other structures whose primary occupancy is public assembly with an occupant load greater than 300 people • Buildings and other structures containing elementary school, secondary school, or daycare facilities with an occupant load greater than 250 • Buildings and other structures with an occupant load greater than 500 • Group I-2 occupancies with an occupant load of 50 or more resident patients, but not having surgery or emergency treatment facilities • Group I-3 occupancies • Power-generating stations; water treatment facilities for potable water, waste water treatment facilities, and other public utility facilities that are not included in Categories IV and V • Buildings and other structures not included in Categories IV and V containing sufficient quantities of toxic, flammable, or explosive substances to be dangerous to the public if released • Facilities having high-value equipment, as designated by the authority having jurisdiction	1.25	1.10	1.15	1.25

Confirmed by NAVFAC. Refer to STV's November 13 email.

EXCERPT FROM REF 7 (UFC 3-301-01)

TABLE E-1

State	Base / City	Ground Snow (psf)	Wind Speed (mph)	Frost Penetration (inches)	Ground Snow (kPa)	Wind Speed (km/h)	Frost Penetration (mm)
Utah	Dugway Proving Ground	10	90	54	0.48	145	1372
	Hill AFB	40	90	73	1.92	145	1854
	Salt Lake City	15	90	59	0.72	145	1499
	Tooele Army Depot	25	90	52	1.20	145	1321
Virginia	Dahlgren	25	90		1.20	145	
	Dam Neck / Virginia Beach Ocean front	10	115	5	0.48	185	127
	Fort A. P. Hill	25	90		1.20	145	
	Fort Belvoir	25	90	26	1.20	145	660
	Fort Eustis	15	97	9	0.72	156	229
	Fort Lee	20	90	14	0.96	145	356
	Fort Monroe	10	105	9	0.48	169	229
	Fort Myer	25	90	26	1.20	145	660
	Fort Story	10	113	9	0.48	182	229
	Henderson Hall / Arlington	25	90	26	1.20	145	660
	Langley AFB / Hampton	10	105	9	0.48	169	229
	NAB Little Creek	10	110	9	0.48	177	229
	Norfolk Region: Camp Elmore Craney Island Depot Norfolk Naval Base	10	107	9	0.48	172	229
	Norfolk Shipyard – Naval Hospital / Portsmouth	10	105	9	0.48	169	229
	NSA Northwest / Chesapeake	10	105	9	0.48	169	229
	NAS Oceana / Virginia Beach	10	113	9	0.48	182	229
	MCB Quantico	25	90	22	1.20	145	559
	Radford AAP	25	90		1.20	145	
	Defense Supply Ctr / Richmond	20	90	18	0.96	145	457
	Wallops Island	20	115		0.96	185	

EXCERPT FROM REF 7 (UFC 3-301-01)

TABLE E-2

State	Base / City	Seismic Data (Site Class B) S_S (%g)	S_1 (%g)	10/50 S_S (%g)	10/50 S_1 (%g)
Utah	Salt Lake City	153	60	61	20
	Tooele Army Depot	73	27	35	12
Virginia	Dahlgren	16	5	6	2
	Dam Neck / Virginia Beach Ocean front	11	5	4	2
	Fort A. P. Hill	18	5	7	2
	Fort Belvoir	15	5	6	2
	Fort Eustis	13	5	5	2
	Fort Lee	19	6	7	3
	Fort Monroe	12	5	5	2
	Fort Myer	15	5	6	2
	Fort Story	11	5	4	2
	Henderson Hall / Arlington	15	5	6	2
	Langley AFB / Hampton	12	5	5	2
	NAB Little Creek	11	5	5	2
	Norfolk Region: Camp Elmore Craney Island Depot Norfolk Naval Base	12	5	5	2
	Norfolk Shipyard – Naval Hospital / Portsmouth	12	5	5	2
	NSA Northwest / Chesapeake	12	5	5	2
	NAS Oceana / Virginia Beach	11	5	4	2
	MCB Quantico	17	5	7	2
	Defense Supply Ctr / Richmond	22	6	8	3
	Radford AAP	32	8		
	Wallops Island	10	4	4	2
	Yorktown Region: Camp Perry Cheatham Annex Yorktown NWS	13	5	5	2
Washington	NS Everett	118(a)	42(b)	62	20
	Fairchild AFB	39	11	13	4
	Fort Lewis / Tacoma	117	41	59	20
	Indian Island SWC	127(a)	46(b)	63	21

EXCERPT FROM REF 8 (UFC 3-301-04)

Table 2-1 (Continued) Replacement For ASCE 7-05 Table 12.2-1
Design Coefficients And Factors For Basic Seismic Force-Resisting Systems

BASIC SEISMIC FORCE-RESISTING SYSTEM	DETAILING REFERENCE SECTION	RESPONSE MODIFICATION COEFFICIENT R^a	SYSTEM OVERSTRENGTH FACTOR, Ω_0^g	DEFLECTION AMPLIFICATION FACTOR, C_d^b	SYSTEM LIMITATIONS AND BUILDING HEIGHT LIMITATIONS (FEET) BY SEISMIC DESIGN CATEGORY[c]				
					B	C	D[d]	E[d]	F[e]
1. Special steel moment frames	*(9)*[j]	2-1/2	1-1/4	2-1/2	35	35	35	35	35
2. Intermediate steel moment frames	*(10)*[j]	1-1/2	1-1/4	1-1/2	35	35	35[h]	NP[h,i]	NP[h,i]
3. Ordinary steel moment frames	*(11)*[j]	1-1/4	1-1/4	1-1/4	35	35	NP	NP[h,i]	NP[h,i]
4. Special reinforced concrete moment frames	*(21.1.1.7)*[l]	2-1/2	1-1/4	2-1/2	35	35	35	35	35
5. Intermediate reinforced concrete moment frames	*(21.1.1.7)*[l]	1-1/2	1-1/4	1-1/2	35	35	NP	NP	NP
6. Ordinary reinforced concrete moment frames	*(21.1.1.7)*[l]	1	1-1/4	1	35	NP	NP	NP	NP
7. Timber frames	*(2301 – 2307)*[p]	1-1/2	1-1/2	1-1/2	35	35	35	NP	NP
H. Structural Steel Systems Not Specifically Detailed for Seismic Resistance, Excluding Cantilevered Column Systems	***AISC 360***	3	3	3	NL	NL	NP	NP	NP

FOR SI: 1 foot (ft) = 304.8 mm, 1 pound per square foot (psf) = 0.0479 kN/m^2

a. Response modification coefficient, *R*, for use throughout. Note *R* reduces forces to a strength level, not an allowable stress level.

b. Deflection amplification factor, C_d, for use in ***ASCE 7-05*** Sections 12.8.6, 12.8.7, and 12.9.2.

c. NL= Not limited and NP = Not permitted. For metric units, use 30 m for 100 ft and 50 m for 160 ft. ***Height is measured from the base of the structure.***

d. See ***ASCE 7-05*** Section 12.2.5.4, ***as modified by 2009 IBC Section 1613.6.6***, for a description of seismic force-resisting systems limited to buildings with a height of 240 feet (75 m) or less.

e. See ***ASCE 7-05*** Section 12.2.5.4, ***as modified by 2009 IBC Section 1613.6.6***, for building systems limited to buildings with a height of 160 feet (50 m) or less.

3-2
Basis of Design - Tower

Attachment 3-2 – BASIS OF DESIGN: TOWER

3-2-1 - Materials

Specification	Description	Locations	Yield Strengh	Ultimate Strength
ASTM A94	High Strength Silicon Steel	Columns	45 ksi	80 ksi
QQ-S-711a Class A	Structural Steel for Bridges	Horizontal and Diagonal Braces	33 ksi	55 ksi
QQ-S-711a Class C	Rivet Steel for Bridges	Rivets	28 ksi	45 ksi

3-2-2 – Basis of Design Codes

i. UFC 3-301-01 Structural Engineering, referencing ASCE 7-05, for structural design except as indicated.

ii. For the following structural loading data, utilize UFC 3-301-01, ASCE 7-05 and IBC 2009:

a) Importance factors for snow load, wind load, and seismic load.

b) Minimum uniformly distributed live loads and minimum concentrated live loads.

c) Ground snow loads used for determining the design snow loads for roofs.

d) Basic wind speeds used for determining the design wind loads for buildings and other structures.

e) Maximum Considered Earthquake ground motion.

3-2-3 – Basis of Design for Dead and Live

i. Dead:

a) Steel: 490 pcf

b) Concrete: 150 pcf

ii. Live:

a) Catwalk/Walkway Loads: 40 psf

3-2-4 – Basis of Design for Wind

i.	Basic Wind Speed:	V = 105 mph
ii.	Exposure Factors Main Wind Resisting System:	C
iii.	Topographic Factor:	K_{zt} = 1.0
iv.	Directionality Factor:	K_d =.95
v.	Occupancy Category:	II
vi.	Importance Factor:	I = 1.0
vii.	Enclosure Classification (UNO):	N/A
viii.	Gust Effect Factor:	G = .85
ix.	Internal Pressure Coefficient (UNO):	N/A
x.	Analysis Procedure	Open Trussed Frame

3-2-5 – Basis of Design for Seismic

i. Seismic loads are based on the methodology outlined in IBC 2009 and ASCE 7-05.

ii.	Site Location:	Portsmouth, VA
iii.	Occupancy Category:	II
iv.	Seismic Importance Factor:	I = 1.0
v.	Maximum Considered Earthquake (MCE) Ground Motion:	
	a) 0.2 Second Spectral Response:	S_s = 0.12g
	b) 1.0 Second Spectral Response:	S_1 = 0.05g
vi.	Seismic Site Classification:	E
vii.	Maximum Considered Earthquake	
	a) Short Period, $F_a * S_s$:	S_{Ms} = 0.30g

b) 1s Period, $F_v * S_1$: $S_{M1} = 0.02g$

viii. Design Spectral Acceleration

a) Short period: $S_{Ds} = .20g$

b) 1s Period: $S_{D1} = 0.12g$

ix. Seismic Design Category: B

x. Analysis Procedure: Equivalent Lateral Force Procedure

xi. Lateral Force Resisting System: Steel Structures Not Specifically Designed for Seismic

3-2-6 - ASD Load Combination Evaluated

Definitions: D – Dead Loads, E – Earthquake Load, F – Fluid, H – Lateral Earth Pressure, L – Live Load, Lr – Roof Live Load, R – Rain Load, S – Snow Load, W – Wind Load

i. Case 1: D + F

ii. Case 2: D + H + F + L

iii. Case 3: D + H + F + (Lr or S or R)

iv. Case 4: D + H + F + 0.75*L + 0.75*(Lr or S or R)

v. Case 5: D + (W or 0.7E) D + $0.75(W_X + W_Z)$

vi. Case 6: D + H + F + 0.75*(W or 0.7E) + 0.75*L + 0.75*(Lr or S or R)

vii. Case 7: 0.6D + W
$0.6D + 0.75(W_X + W_Z)$

viii. Case 8: 0.6D + 0.7E

* Note: W loads evaluated in X and Z Directions. E loads evaluated in X, Y, and Z directions. All W and E loads evaluated separately in the + and – directions.

3-2-7 - LRFD Load Combinations Evaluated (for anchor bolts only)

i. Case 1: 1.4D

ii. Case 4&5: 1.2D + (1.6W or 1.0E)
$1.2D + 1.2(W_X + W_Z)$

iii. Case 6&7: 0.9D + (1.6W or 1.0E)
$0.9D + 1.2(W_X + W_Z)$

* Note: W loads evaluated in X and Z Directions. E loads evaluated in X, Y, and Z directions. All W and E loads evaluated separately in the + and – directions.

3-3
Foundation

3.3- Foundation

3-3-1- DESIGN REFERENCES: Codes and Standards

The following codes and Standards are followed for the analysis:

- UFC 3-301-01, Structural Engineering , 27 January 2010 with Change 3, 31 January 2012
- IBC 2009, International Code Council, International Building Code, 2009 Edition
- ASCE 7-05, American Society of Civil Engineers, Minimum Design Loads for Buildings and Other Structures
- AASHTO LRFD Bridge Design Specifications, 5th Edition, 2010.
- ACI 318-05/318R-05, American Concrete Institute, Building Code Requirements for Structural Concrete and Commentary
- AISC, American Institute of Steel Construction, Manual of Steel Construction, 13th Edition
- NDS, 2005, National Design Specification for Wood Construction

3-3-2- MATERIALS

The following material properties found in Tables 3-3-1 to 3-3-3 have been used for the analysis:

Table 3-3-1: Reinforcing Steel Properties

Yield, fy	33.0 ksi (assumed based on the time of construction)
Young's Modulus, E	29,000 ksi

Table 3-3-2: Concrete Properties

28 Day Compressive Strength, f'c	3000 psi (assumed)
Young's Modulus, E	57000√f'c = 3.12x106 psi
Modulus of Rupture, fr	7.5√f'c = 411 psi
Shear Modulus, G	1.3x106 psi
Poisson's Ratio, ν	0.2
Density	150 pcf
Coefficient of Thermal Expansion	x 10-6 / °F

Table 3-3-3: Timber Pile Properties

Species	Treated Southern Pine
Reference Bending Design Value, Fb	2400 psi
Reference Shear Design Value, Fv	110 psi
Reference Compression Value Parallel to Grain, $Fc^{\perp}$	1200 psi
Reference Young's Modulus, E	1.5x106 psi
Reference Young's Modulus, Emin	7.9x105 psi
Specific Gravity	0.55
Unit Weight	34.32 pcf

ATTACHMENT 4
Boom Calculation Details

ATTACHMENT

Table of Contents

Attachment 4 – Boom Calculation Details
- 4-1 – Boom Analysis
  - 4-1-1 – Analysis Summary
  - 4-1-2 – Model Overview
  - 4-1-3 – Sections
  - 4-1-4 – Loads
  - 4-1-5 – Reactions & Deflections
  - 4-1-6 – Load Combinations
  - 4-1-7 – Member Buckling Factors
  - 4-1-8 – Member Stress Analysis
  - 4-1-9 – Selected Truss Connection Evaluation
  - 4-1-10 – Roller Loads
  - 4-1-11 – Tread & Pinion Girder Evaluations
  - 4-1-12 – Spud Lock Assembly Evaluation
  - 4-1-13 – King Pin Assembly Evaluation
  - 4-1-14 – Machinery House Framing
- 4-2 – Supporting Documentation
  - 4-2-1 – AISC Historic Rolled Shapes
  - 4-2-2 – Materials References

4-1
Boom Analysis

4-1-1
Analysis Summary

Objective and Approach

Evaluate the boom structure for the mothball condition in accordance with the review criteria in Attachment 3.

Some structural components meet the review criteria by inspection and were not considered in the calculations, e.g., trolley structure, rope connections, and lift machinery connections.

References

References used for this evaluation are listed in Attachment 3 – Basis of Analysis.

The original American Bridge design calculations and drawings are the primary reference used.

Analytical Methods

Strengths are evaluated using the AISC ASD approach. Boom stability is evaluated using the AISC LRFD approach.

The Liftech Analysis Suite (LAS) is used to analyze the Boom structure. LAS is Liftech's proprietary finite element analysis software developed particularly for the analysis of crane structures. Manual and spreadsheet calculations are also used in the evaluation of some structural components.

Boom Strength and Stability

The boom analysis considered the truss connections fixed and accounted for secondary stresses. The original American Bridge design analysis considered truss connections as "pinned". Many design specifications allow trusses to be designed without consideration of secondary stresses, or permit increased allowable stresses when secondary stresses are considered. Refer to Section 6.14.2.3 of *AASHTO LRFD Bridge Design Specifications*, 4th Edition; Section 5.3 of BS 2573: Part 1:1983, *Rules for the design of cranes, Part 1. Specification for classification, stress calculations and design criteria for structure*; and BS EN 1993: Part 1-1:2005, *Eurocode 3: Design of steel structures—Part 1-1: General rules and rules for buildings*. Excerpts from AASHTO and BS 2573 are shown below.

6.14.2.3 Secondary Stresses

The design and details shall be such that secondary stresses will be as small as practicable. Stresses due to the dead load moment of the member shall be considered, as shall those caused by eccentricity of joints or working lines. Secondary stresses due to truss distortion or floorbeam deflection need not be considered in any member whose width measured parallel to the plane of distortion is less than one-tenth of its length.

Excerpt from AASHTO LRFD Bridge Design Specifications, 4th Edition

BS 2573 : Part 1 : 1983

5.3 Secondary stresses

Secondary stresses shall be added to the coexistent (primary) stresses in the individual members and shall be checked in accordance with the following.

NOTE. For the purposes of this standard, stresses in the individual members of lattice or braced structures that are the result of eccentricity of connections, elastic deformation of the structure, and rigidity of joints are defined as secondary stresses. Where secondary stresses are computed and added to the coexistent (primary) stresses calculated in accordance with 5.1 and 5.2, higher stress levels are permitted.

(a) *Members subjected to axial compression and bending*

$$\frac{f_{ac}}{P_{ac}} + \frac{f_{bc}}{P_{bc}} \leqslant 1.20$$

subject to the limitation that

$$\frac{f_{ac}}{P_{ac}} \leqslant 1.0$$

where f_{ac}, P_{ac}, f_{bc} and P_{bc} are as defined in 5.1.7.1.2.

(b) *Members subjected to axial tension and bending*

$$\frac{f_{at}}{P_{at}} + \frac{f_{bt}}{P_{bt}} \leqslant 1.20$$

subject to the limitation that

$$\frac{f_{at}}{P_{at}} \leqslant 1.0$$

where f_{at}, P_{at}, f_{bt} and P_{bt} are as defined in 5.1.7.1.3.

Excerpt from BS 2573: Part 1:1983

The criteria used for this evaluation are based on BS 2573. Allowable stresses at joints, when secondary stresses are considered, are increased to 120% of the basic allowable stress.

Boom-Tower Interface Loads

Calculated support reactions from the finite element analysis are used to calculate the forces on the rollers, kingpin, and spud lock.

Limitations

The strength of the fiberglass windows in the machinery house is not evaluated since the failure of this element during the review hurricane is not significant.

Results

These calculations indicate the following:

1. Overview
    a. The strength of the primary structural members meets the review criteria for all locations except one location at the bottom of a boom vertical over the roller support which has a calculated Design Capacity Ratio (DCR) of 1.02. Considering the analysis simplifications, in particular the boundary conditions used for the roller supports, the stress is acceptable.
    b. The boom is stable on its roller support.
    c. The risk of failure is acceptable.
    d. Some machinery house wall framing members, such as the horizontal angle girts spanning between frames, may yield and permanently deform in the hurricane, but will not fail.
    e. Gravity is the most significant loading resulting in similar DCRs for the wind and earthquake load combinations. The wind loading combinations control for most members and result in slightly larger DCRs than the earthquake loading combinations.
    f. The primary structural member with the largest calculated stress is a cross frame vertical at the tower support (Member LM6):
        i. Calculated nominal unfactored stress: 29.7 ksi (Member LM6, Joint L6N, Combination 5W)
        ii. Allowable stress: 29.2 ksi (based on 27 ksi basic allowable stress reduced to account for buckling and increased by 20% to account for the consideration of secondary stresses).
        iii. DCR = 1.02

2. Calculated DCRs

Maximum Demand Capacity Ratios (DCRs) for all load combinations are shown in Figure 4.1.1A.

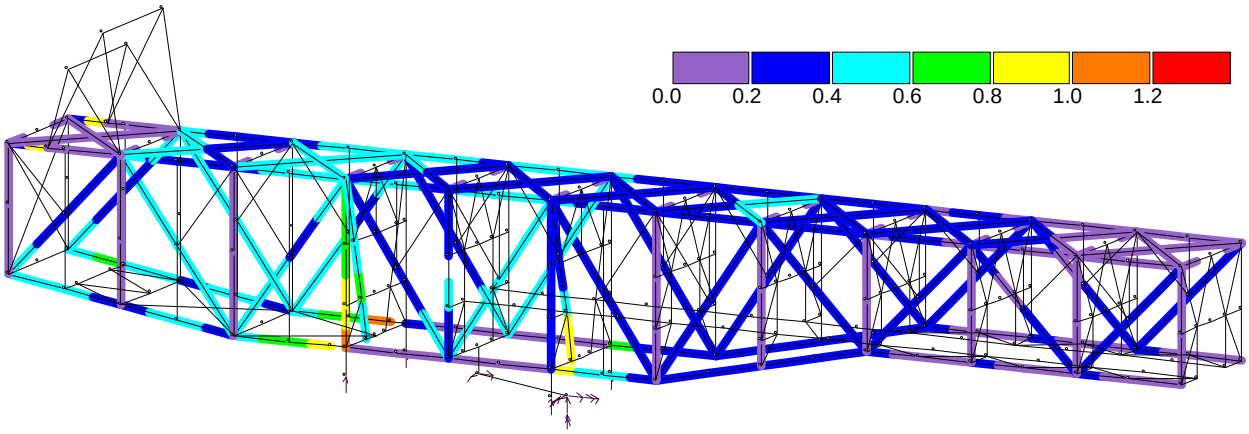

WIND AND EARTHQUAKE COMBINATIONS

Figure 4.1.1.A – Maximum DCRs – All Loading Combinations

DCRs for the storm wind and earthquake load combinations are shown in Figure 4.1.1.B and 4.1.1.C respectively.

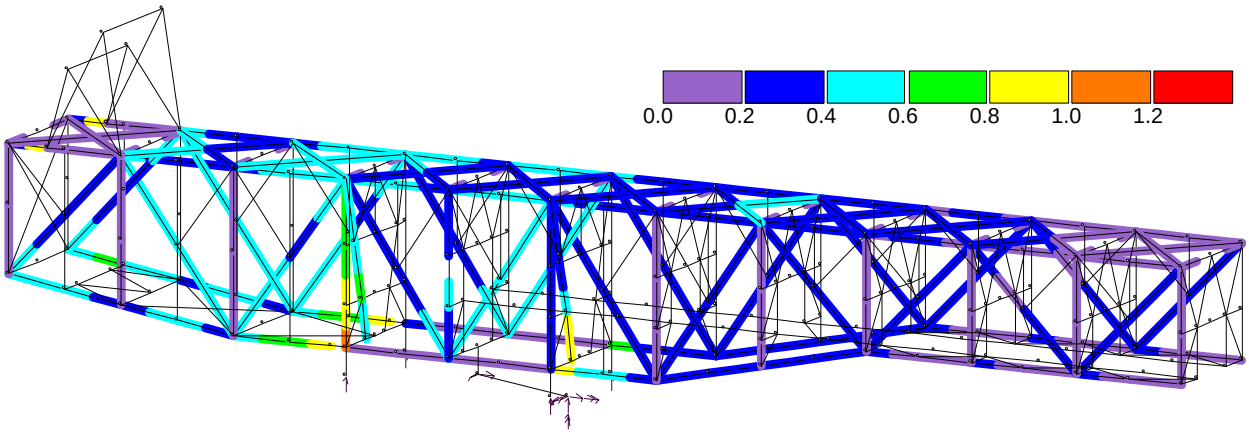

WIND COMBINATIONS

Figure 4.1.1.B –DCRs - Wind Combinations

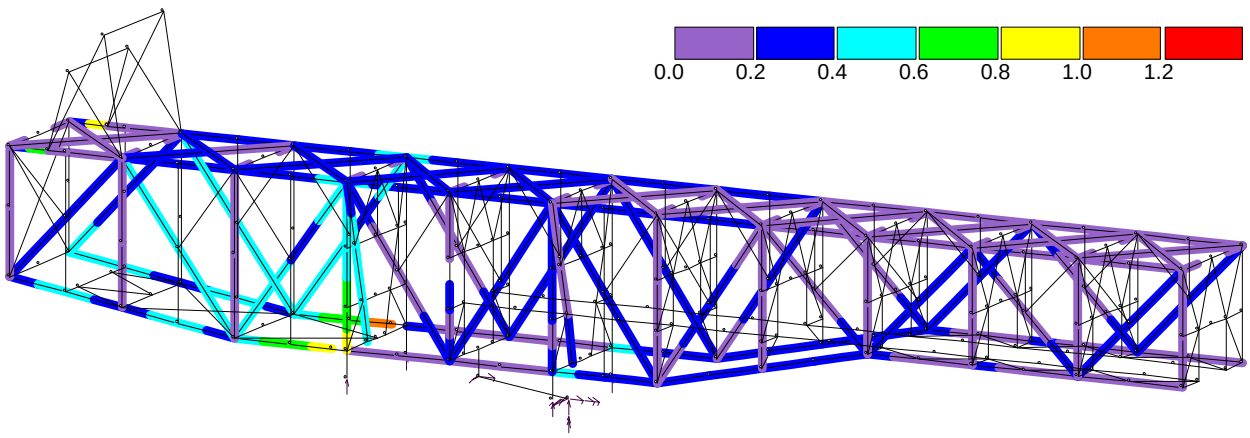

FIXED JOINTS - EARTHQUAKE COMBINATIONS

Figure 4.1.1.C – DCRs - Earthquake Combinations

Calculated Demand Capacity Ratios for each end of each member are presented in Attachment 4-1-8. An example of the calculation output is shown in Figure 4.1.1D.

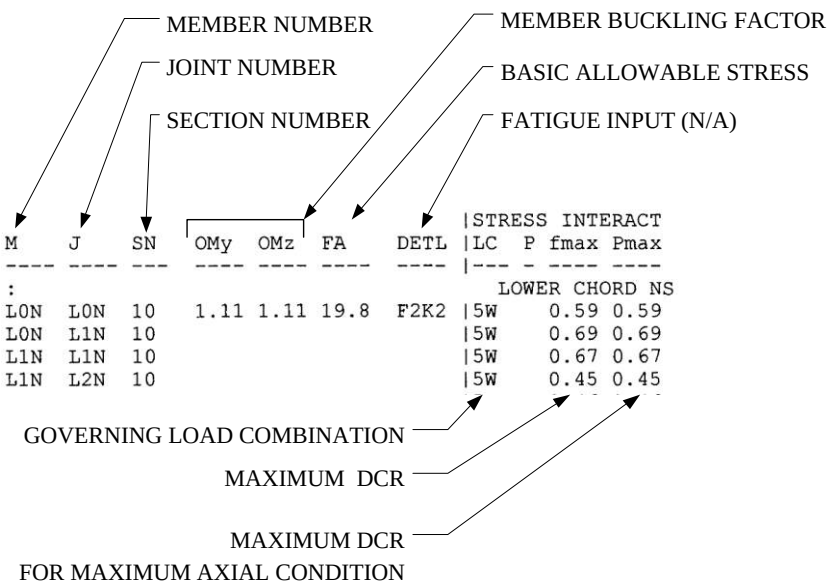

Figure 4.1.1.D – Explanation of Stress Output Format

3. Roller Loads:
    a. The calculated roller loads are similar to the original design loads.
    b. Boom uplift from the rollers does not occur.

4-1-2
Model Overview

Model Overview
Unit: Inches

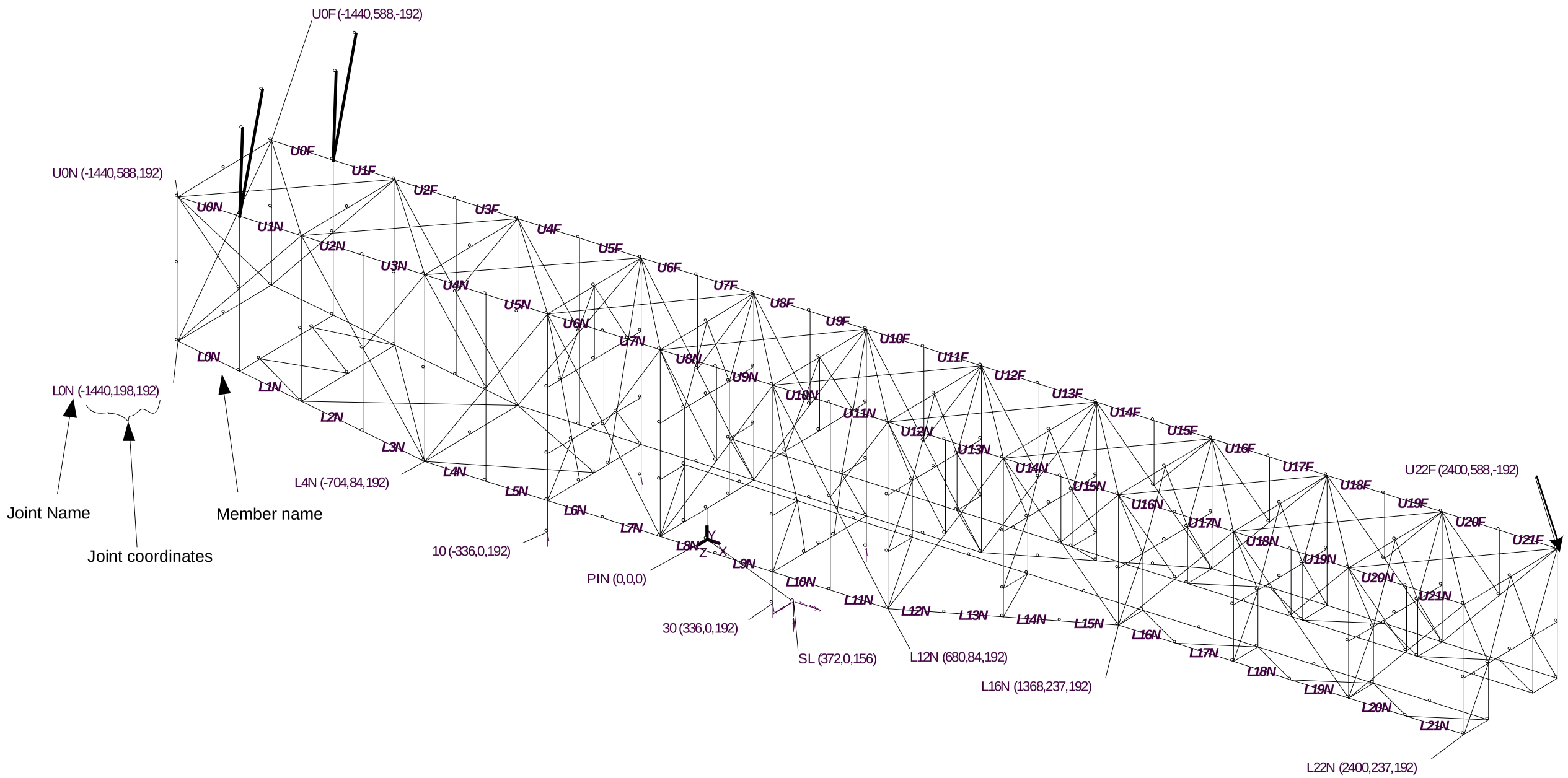

Basic Dimensions
Unit: Inches

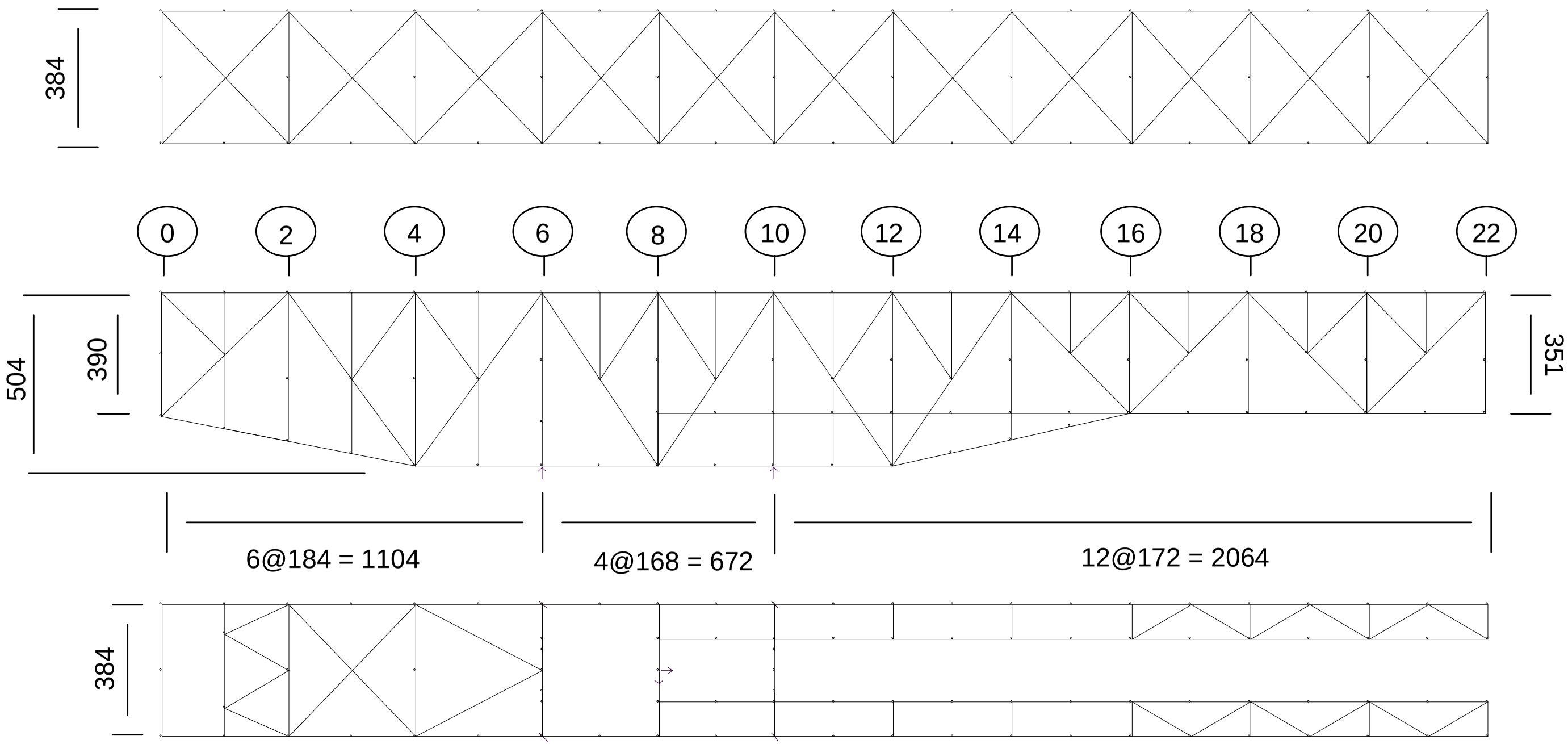

Joints & Members

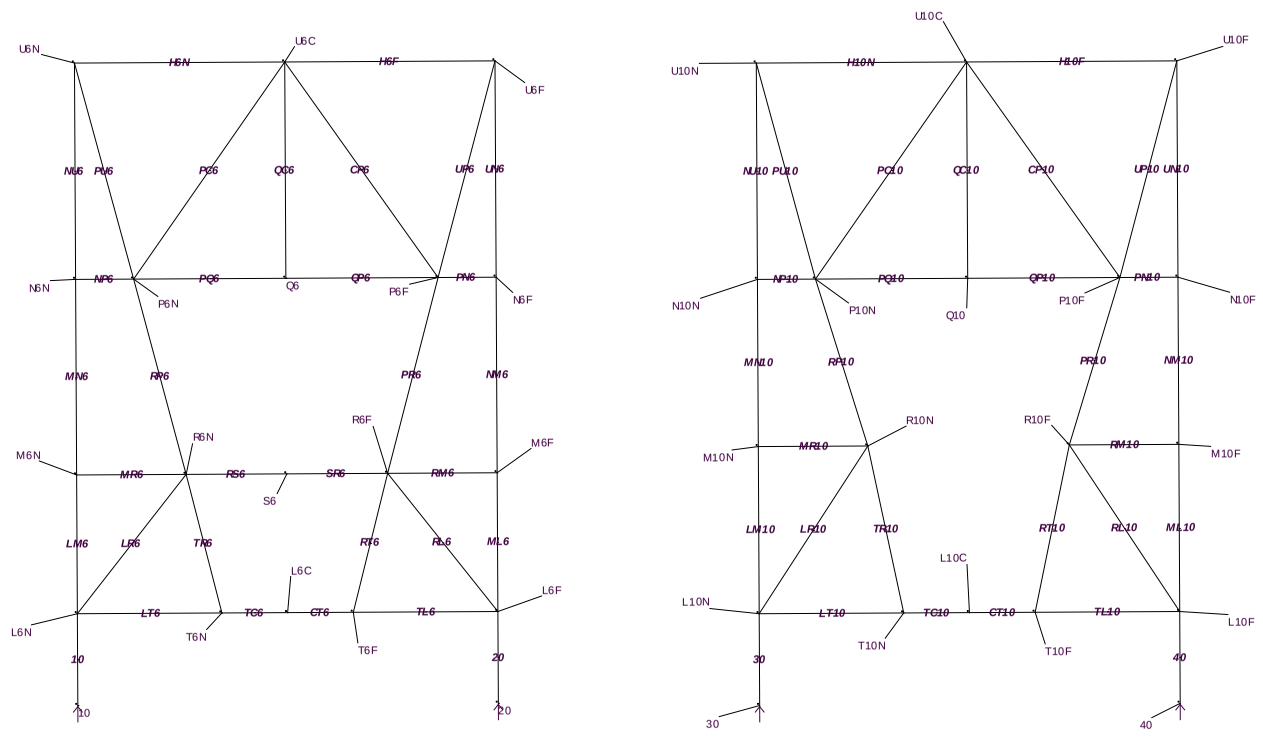

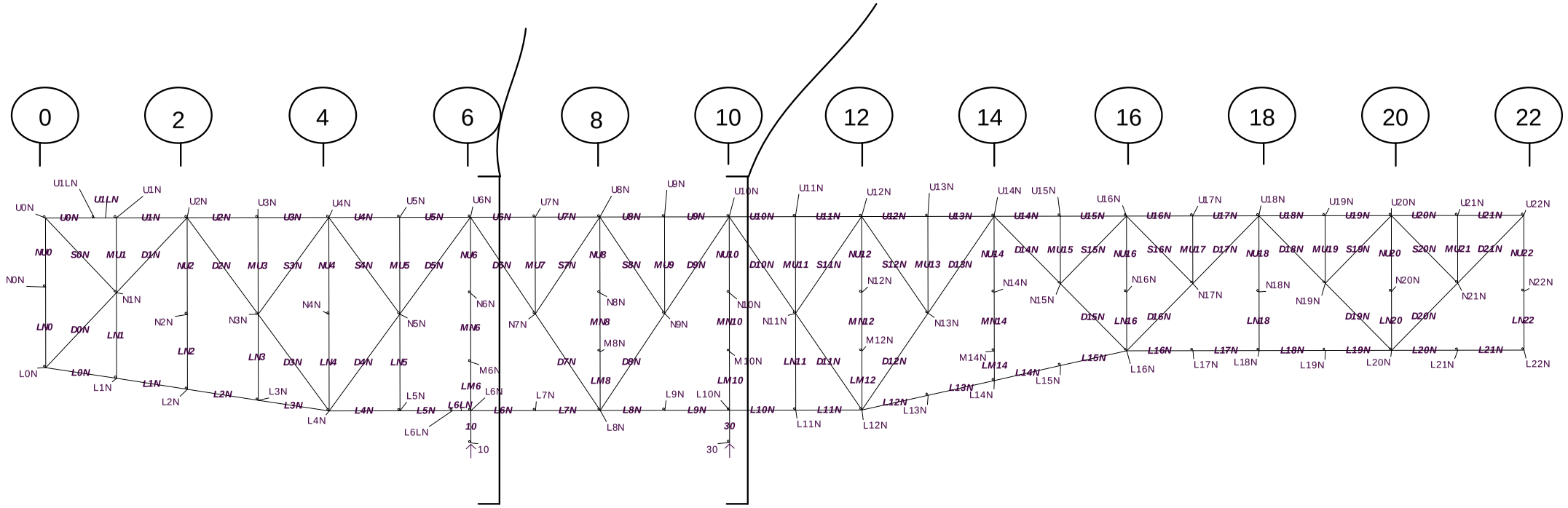

Member Releases

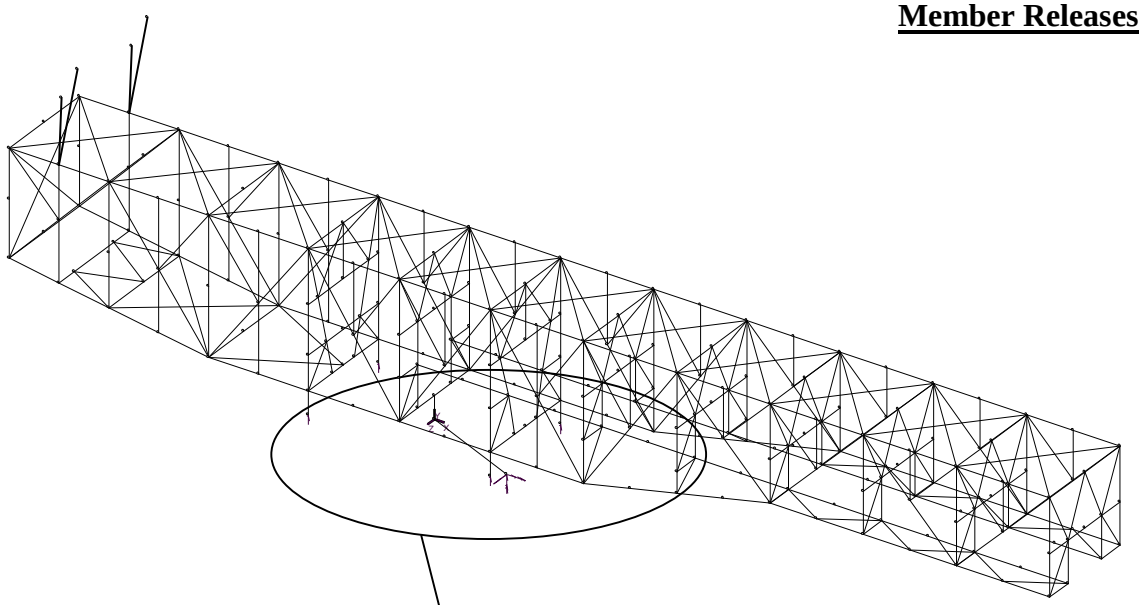

Truss joints are modeled
as fixed connections

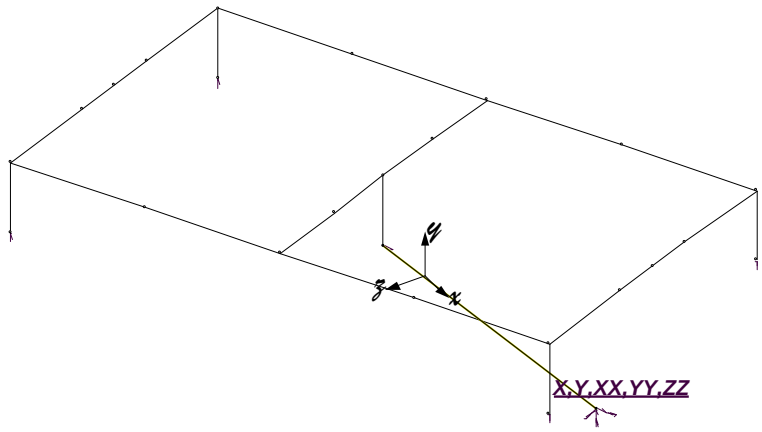

For correct reaction
at spudlock

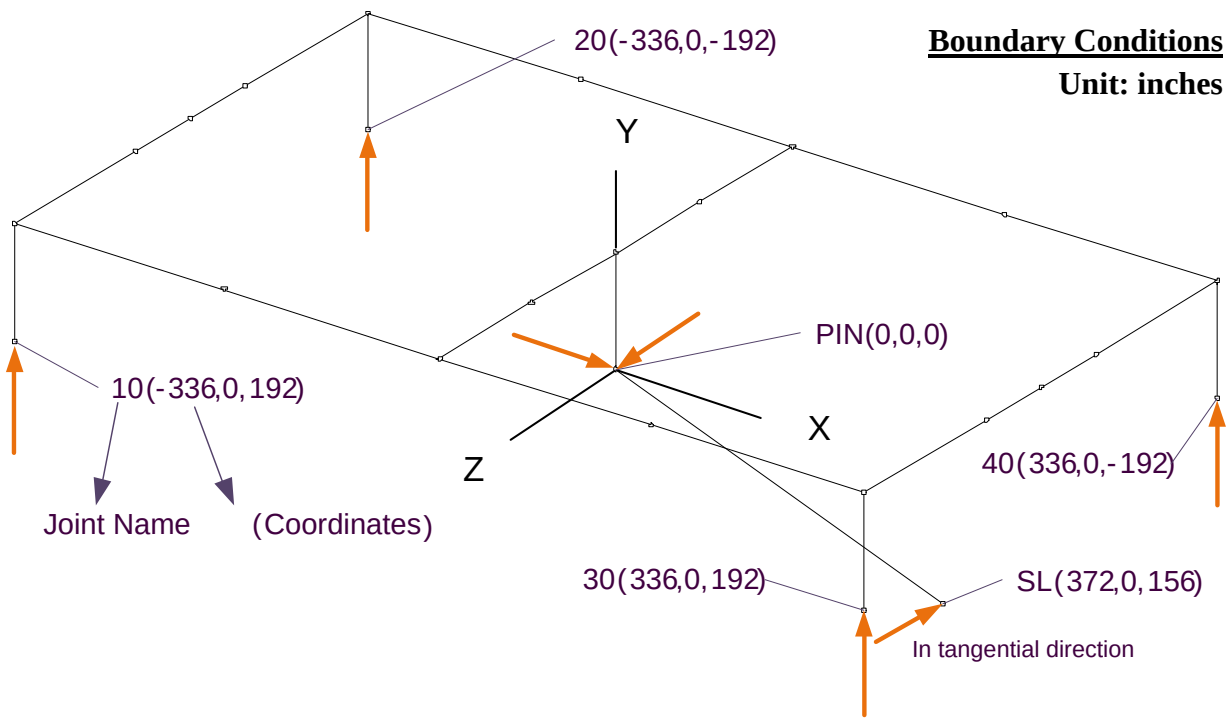
Boundary Conditions
Unit: inches
20(-336,0,-192)
Y
PIN(0,0,0)
10(-336,0,192)
X
Z
40(336,0,-192)
Joint Name
(Coordinates)
30(336,0,192)
SL(372,0,156)
In tangential direction

4-1-3
Sections

Section Assignments
Main Truss

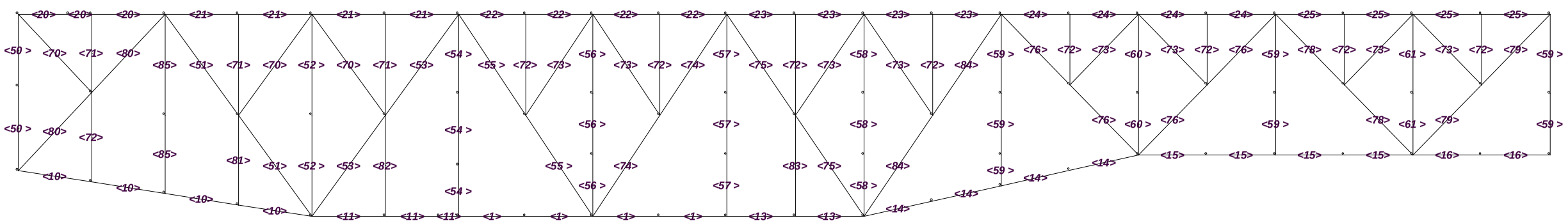

Section #1 is artificial
Sections # 71, 72, 73 are
approximated as #70.

Section Assignments
Top Chords & Braces

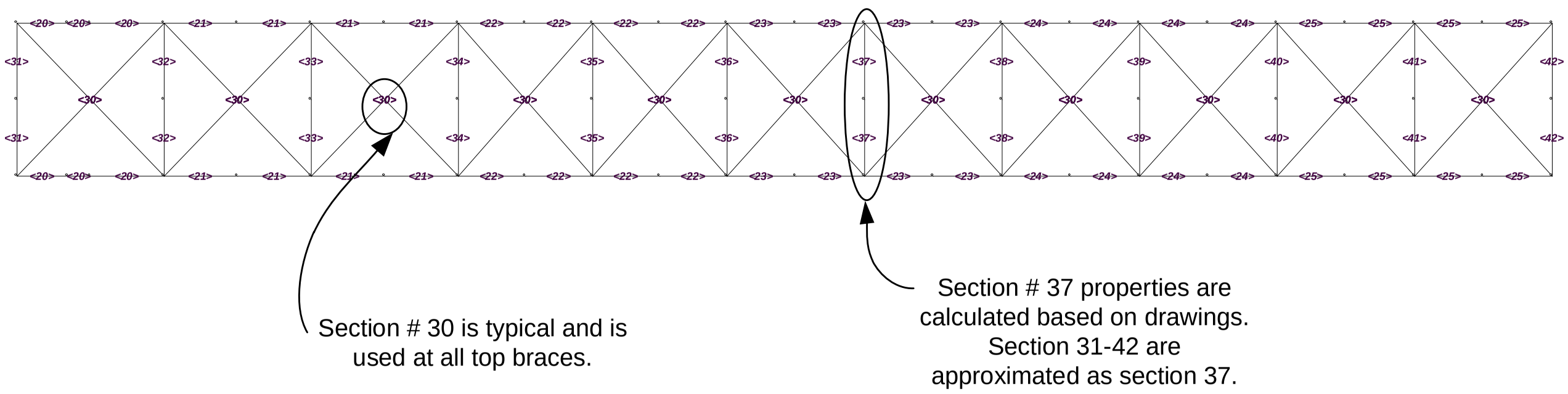

Section Assignments
Runway Level

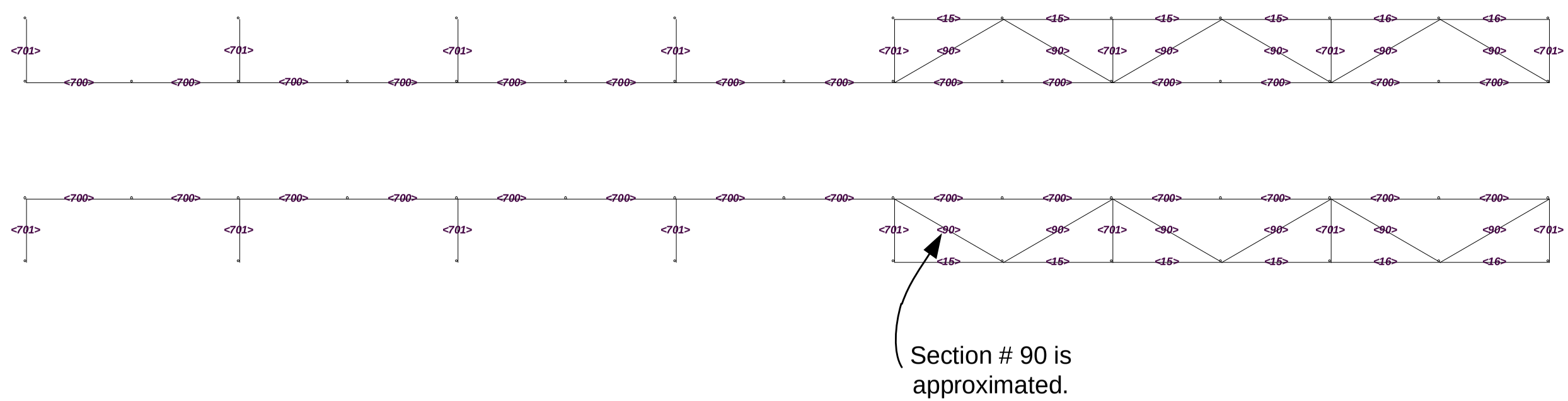

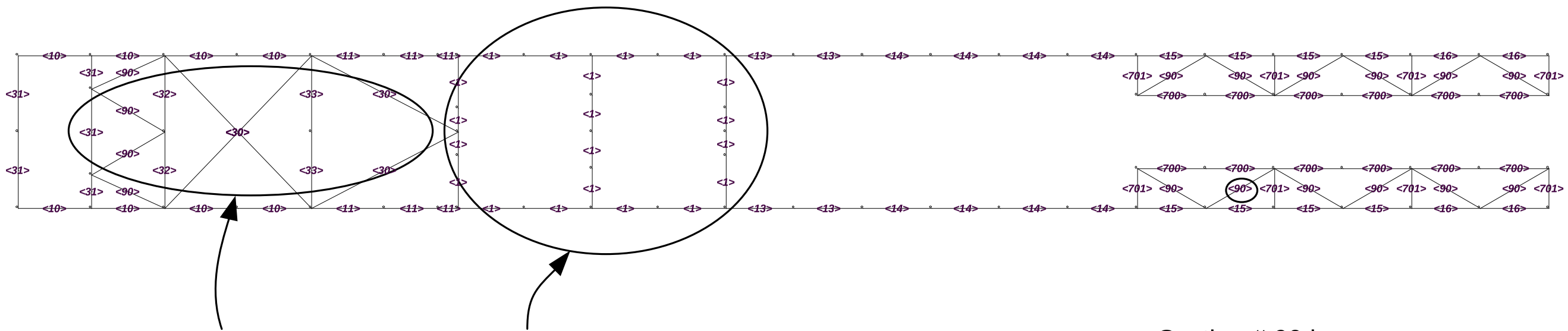
Sections are approximated.
Artificially rigid sections are used at base.
Section # 90 is approximated.

Section Assignments
Transverse Frames

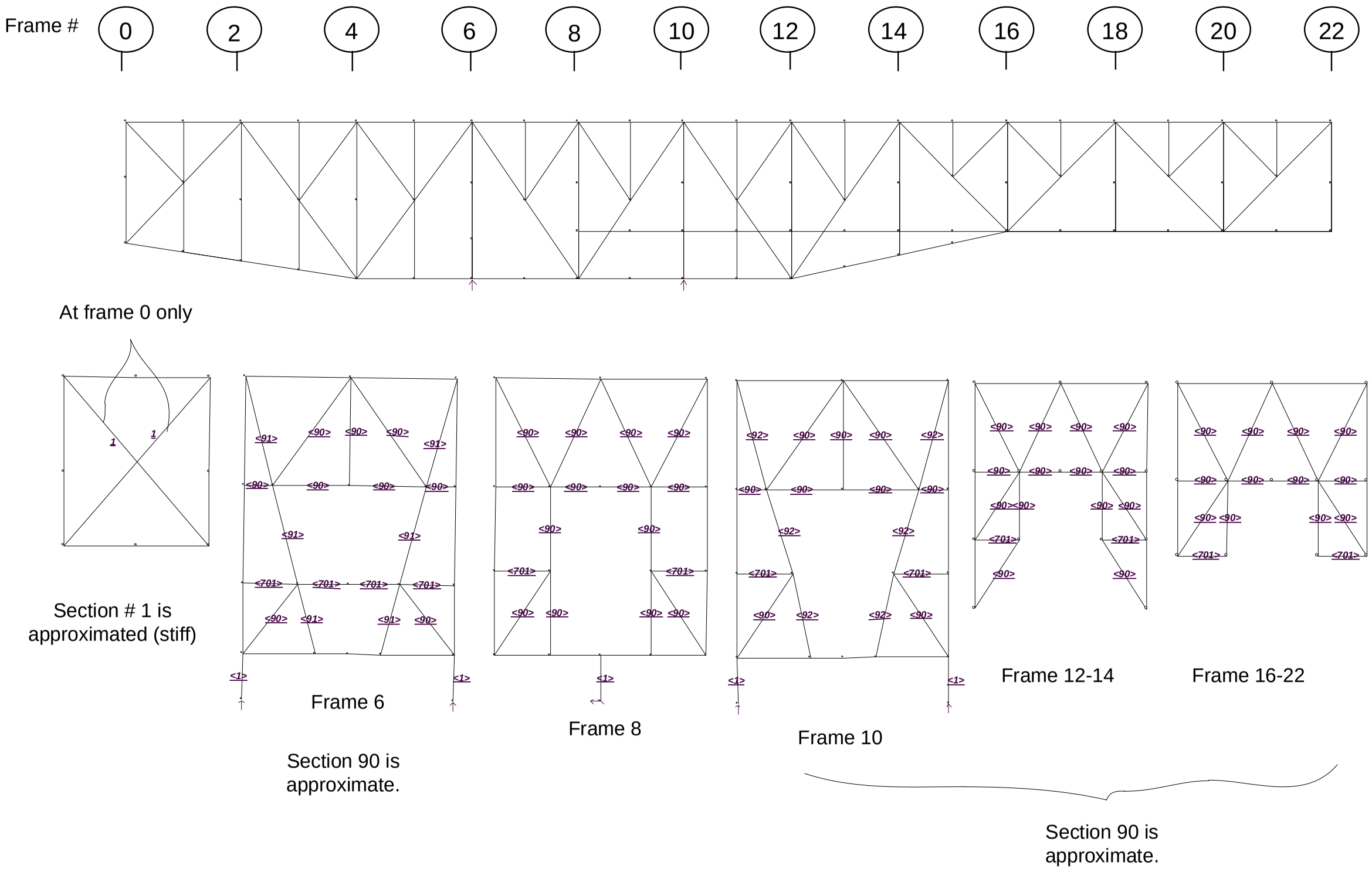

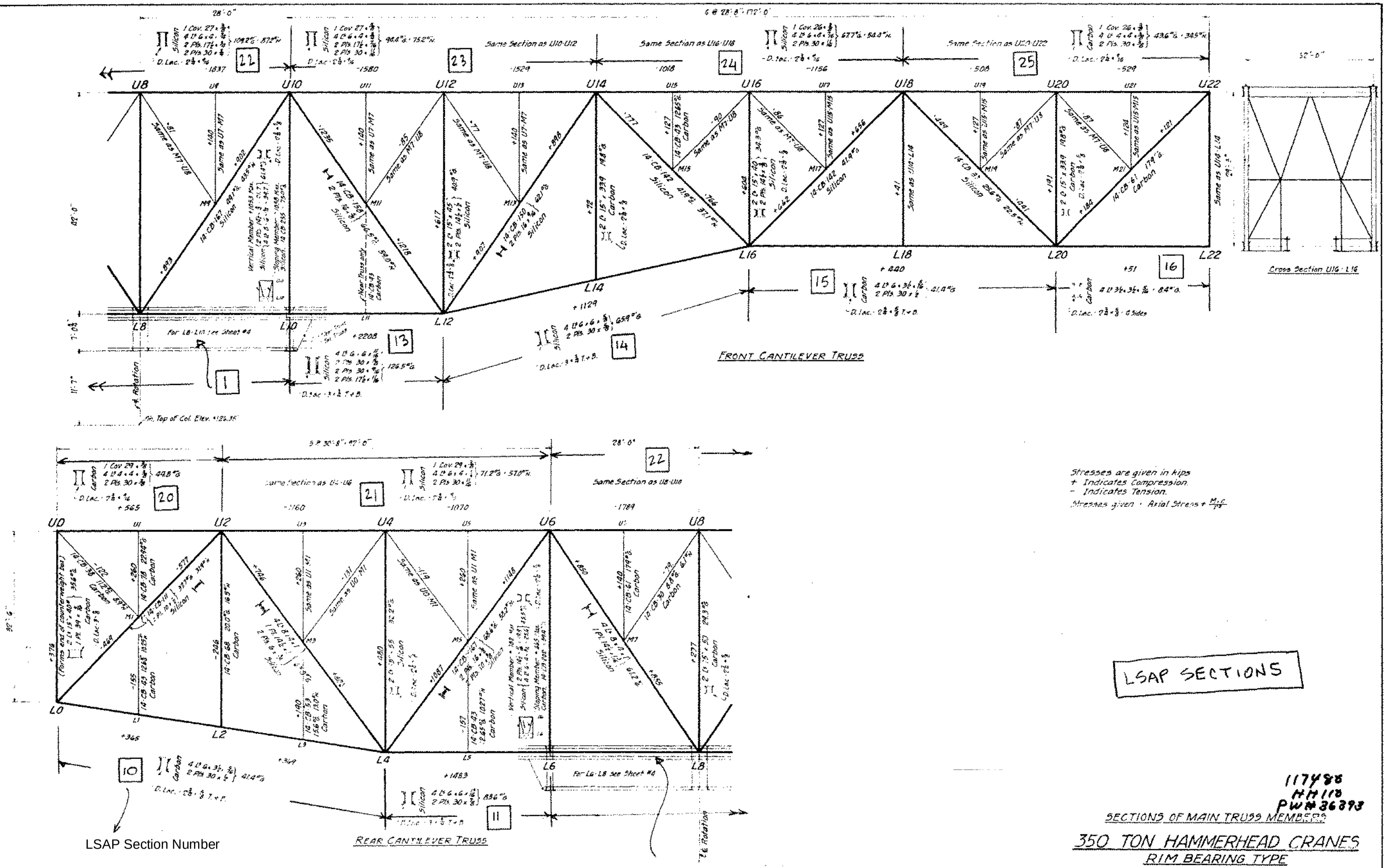
FRONT CANTILEVER TRUSS
REAR CANTILEVER TRUSS
Cross Section U16-L16
Stresses are given in kips
+ Indicates Compression.
- Indicates Tension.
Stresses given = Axial Stress + M/f
LSAP SECTIONS
LSAP Section Number
Artificial Stiff Section 1
SECTIONS OF MAIN TRUSS MEMBERS
350 TON HAMMERHEAD CRANES
RIM BEARING TYPE
ONE CRANE FOR NEW YORK NAVY YARD
ONE CRANE FOR NORFOLK NAVY YARD
117486
MM 118
PW# 36393
ORDER Nos H-2221 to 2240
INQUIRY No P-2371
In Charge of V.D.B.
Revised 5-3-39 4-22-39 5-24-39 6-16-39 7-18-39
American Bridge Company
Pittsburgh, Pa.
March 15 · 1939
Sheet No 8 of

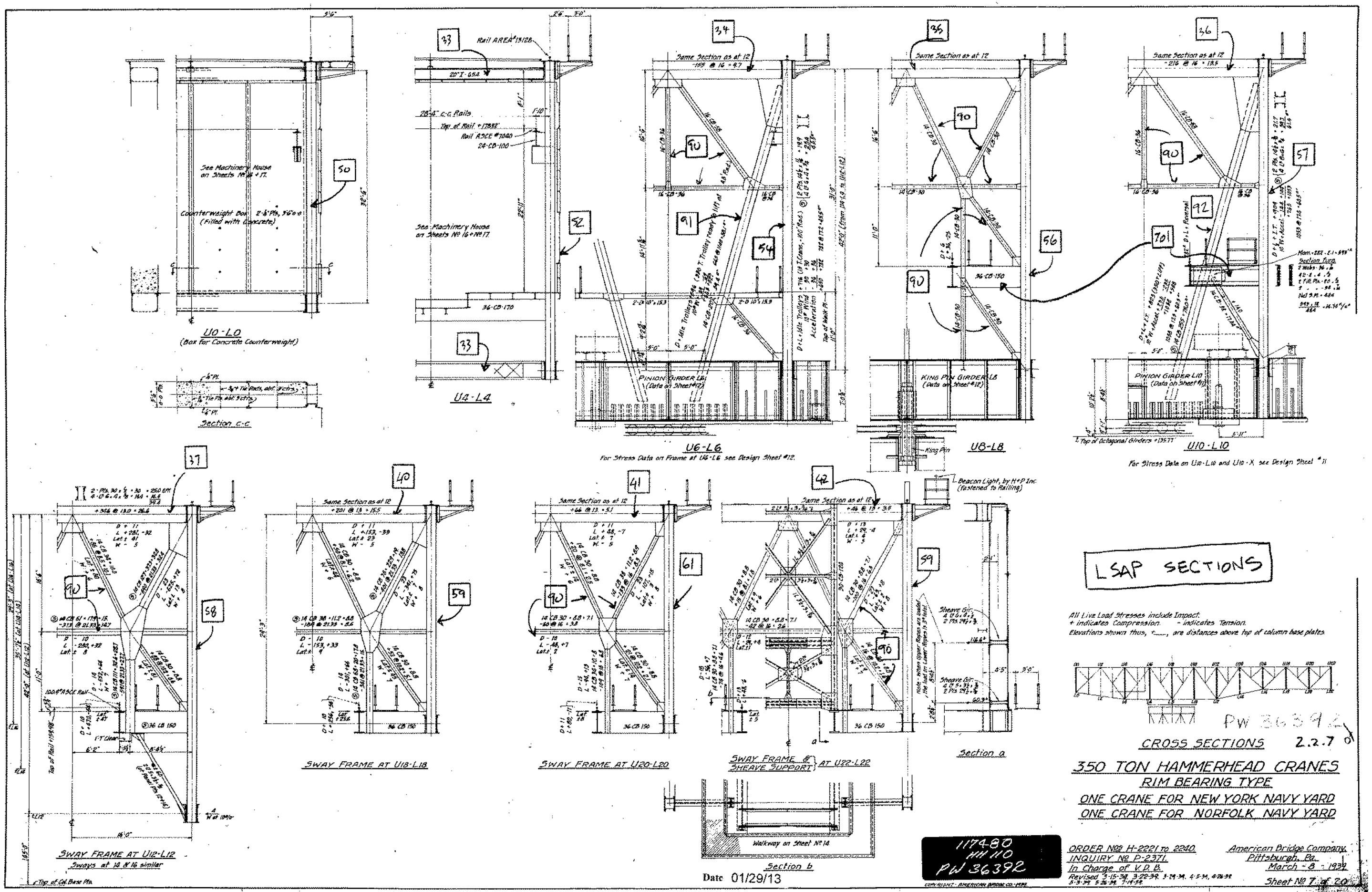
U0-L0
(Box for Concrete Counterweight)
See Machinery House on Sheets Nº 16 + Nº 17.
Counterweight Box 2-½ Pls, 3'-6" o.o (Filled with Concrete)
Section C-C
U4-L4
Rail AREA #13128
20" I - GSA
28'-4" c-c Rails
Top of Rail + 17.892'
Rail ASCE #1040
24-CB-100
See Machinery House on Sheets Nº 16 + Nº 17.
36-CB-170
U6-L6
For Stress Data on Frame at U6-L6 see Design Sheet #12.
Same Section as at 12
PINION GIRDER L6 (Data on Sheet #12)
U8-L8
KING PIN GIRDER L8 (Data on Sheet #12)
King Pin
Beacon Light, by H+P Inc. (Fastened to Railing)
U10-L10
For Stress Data on U10-L10 and U10-X see Design Sheet #11
PINION GIRDER L10 (Data on Sheet #11)
Top of Octagonal Girders +135.77'
SWAY FRAME AT U12-L12
Sways at 12 & 16 similar
Top of Col. Base Pls.
SWAY FRAME AT U18-L18
SWAY FRAME AT U20-L20
SWAY FRAME @ SHEAVE SUPPORT AT U22-L22
Walkway on Sheet Nº 14
Section b
Section a
36-CB-150
LSAP SECTIONS
All Live Load Stresses include Impact.
+ indicates Compression. - indicates Tension.
Elevations shown thus, +____, are distances above top of column base plates.
CROSS SECTIONS 2.2.7
350 TON HAMMERHEAD CRANES
RIM BEARING TYPE
ONE CRANE FOR NEW YORK NAVY YARD
ONE CRANE FOR NORFOLK NAVY YARD
117480
HH 110
PW 36392
ORDER Nº H-2221 to 2240
INQUIRY Nº P-2371
In Charge of V.D.B.
American Bridge Company
Pittsburgh, Pa.
March - 8 - 1934
Sheet Nº 7 of 20
Date 01/29/13

LOWER CHORD. L0 - L4

SECTION DEFINITION

REF. PW# 36393, 36532.

(4) L's 6 × 3 1/2 × 5/16, (2) PL's 30 × 1/2.

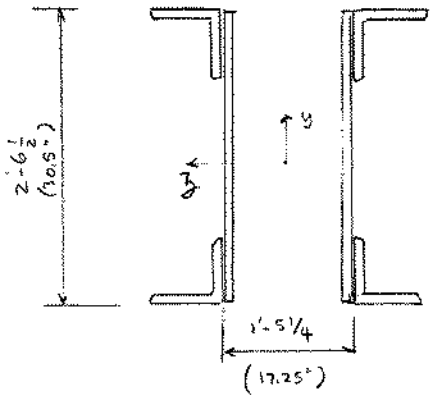

LSAP SECTION # 10.

L4 - L6 (REF PW# 36455) SEE SKETCH ABOVE.

(4) L's 6 × 6 × 11/16 ; 2 PL's 30 × 7/8 LSAP SECTION # 11

L10 - L12 (REF. PW# 36447)

(4) L's 6 × 6 × 11/16 ; 2 PL's 30 × 5/8 , 2 PL's 30 × 9/16 ; 2 PL's 17 1/2 × 11/16

5/8 + 9/16 = 19/16.

USE 1 PL (19/16") IN LSAP SECGEN

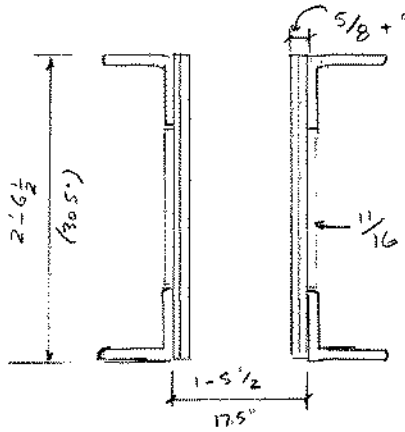

LSAP SECTION # 13.

SECTIONS (CONT)

L12 - L16 (REF. PW # 36450).

SEE SKETCH ON PRE. SHT.

(4) ∠s 6 x 6 x 5/8 ; 2 PL s 30 x 5/8.

LSAP SECTION #14

L16 - L20. (REF PW 36451)

(4) ∠s 6 x 3 1/2 x 5/16 ; 2 PL s 30 x 1/2 - SAME AS SECTION #10. (L0 - L4)

LSAP SECTION #15.

L20 - L22 (REF. PW 36452).

(4) ∠s 3 1/2 x 3 1/2 x 5/16.

LSAP SECTION #16.

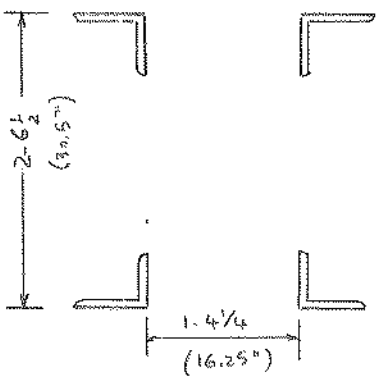

UPPER CHORD

SECTIONS (CONT.)

U0 – U2 (REF. DW# 36393) & 36530 SECTION A

(1) COV. PL 29 x 3/8 ; (4) LS 4 x 4 x 3/8 ; (2) PLS 30 x 3/8.

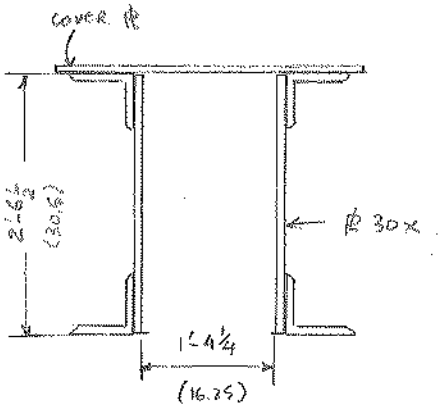

LSAP SEC. # 20.

U2 – U6 (REF. DW# 36393) & 36530 · SECTION A)

(1) COV. PL 29 x 3/8 ; (4) LS 6 x 4 x 1/2 ; 2 PLS 30 x 11/16

LSAP SECTION # 21

U6 · U10 (REF. DW# 36393 & 36528 SECTION A)

(1) COV. PL 27 x 3/8 ; (4) LS 6 x 4 x 3/4 ; (2) PLS 17 1/2 x 3/4 ; (2) PLS 30 x 3/4.

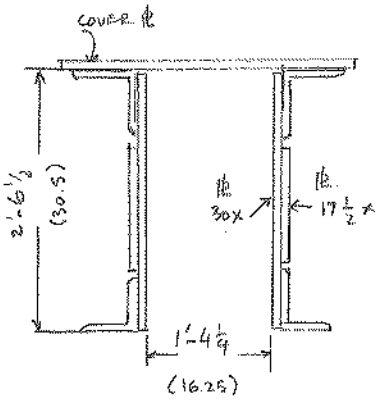

LSAP SECTION # 22

U10 - U14 (REF. PW# 36393, 36528).

SECTIONS (CONT.)

(1) COV. PL 27 x 3/8 ; (4) L's 6 x 4 x 3/4 ; (2) PL's 17 1/2 x 7/16 , (2) PL's 30 x 11/16 .

SEE PREV. SHT FOR SKETCH. LSAP SECTION # 23.

U14 - U18. (REF. PW# 36393, 36529)

(1) COV. PL 26 x 3/8 ; (4) L's 6 x 4 x 7/16 ; (2) PL's 30 x 11/16.

(SEE FOR SKETCH) LSAP SECTION # 24

U18 - U22 (REF. PW# 36393, 36530)

(1) COV PL 26 x 3/8 ; (4) L's 4 x 4 x 3/8 , (2) PL's 30 x 3/8 .

LSAP SECTION # 25.

DIAGONALS / VERTICALS

SECTIONS. (CONT.)

L0-U0 (REF. PW# 36393, 36464

LSAP SECTION 50

(2) [S 15[40 ; (1) PL 39 x 5/16

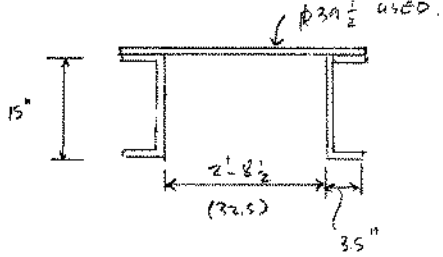

BASED ON DWG. PW# 36393

$A = 35.6\ in^2$.

$A_{PL} = 12.34\ in^2$

$A_{[} = 11.63\ in^2$ EA.

(CHK. 15[40. AREA based on wt.

$A = \frac{40\ \#/ft}{490\ \#/ft^3} \times 144\ \frac{in^2}{ft^2} = 11.76\ in^2 = 1'63$ ✓

use $t = \frac{1}{2}$" for [

A of [= $(14 + 7) \times 0.5 = 10.5\ in^2$ EA ≈ OK

L0-U2 (REF PW# 36393.

(1) 14 CB 111 ; (1) PL 10 x 1/2

LSAP SECTION 80

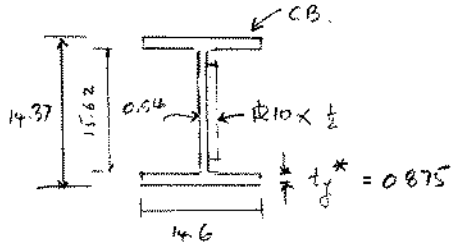

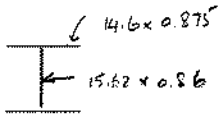

USED.

L2-U2 (PW# 36393) SIZE 14CB68

LSAP SECTION 85.

DIAGONAL U2 - L4. PW # 36393, 36462

(4) L 8 x 4 x 1 ; (1) PL 14 1/2 x 1 ; (2) PLs 6 x 3/8.

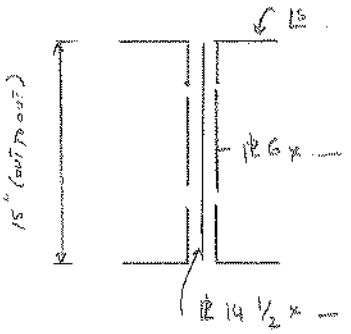

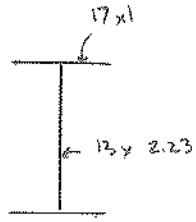

LSAP. SECTION # 51

USED

VERTICAL L4 - U4. (PW # 36393, 36465)

2 [s 15 x 55 ; A = 32.2 in². (From Pwg # 36393)

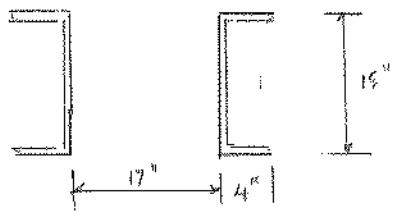

USE:

t = 0.75 ; A = 0.75 x (15 + 8) x 2 = 32.2

LSAP # 52

DIAGONAL L4 - U6. (PW # 36393, 36470)

(1) 14 CB 167 ; (2) PLs 16 x 3/8 ; 2 PLs 10 x 3/8.

PL 16 x 3/8 T & B (A = 68.6)

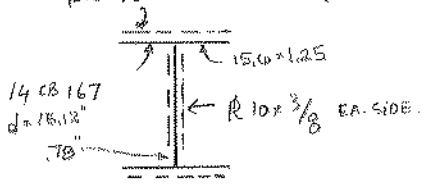

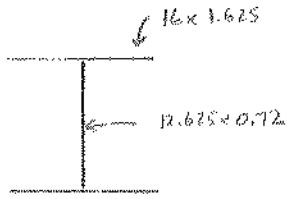

CLOSE OK

USED. LSAP SECTION # 53

DIAGONAL U2 - L4. PW # 36393, 36462

(4) L 8 x 4 x 1 ; (1) PL 14 1/2 x 1 ; (2) PLs 6 x 3/8.

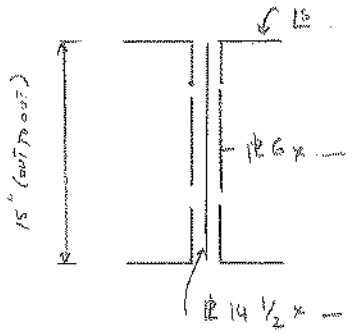

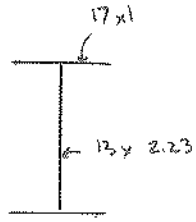

LSAP. SECTION # 51

USED

VERTICAL L4 - U4. (PW # 36393, 36465)

2 [s 15 x 55 ; A = 32.2 in². (From Pwg # 36393)

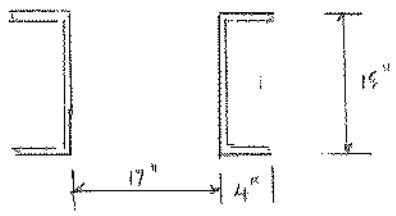

USE.

t = 0.75 ; A = 0.75 x (15 + 8) x 2 = 32.2

LSAP # 52

DIAGONAL L4 - U6. (PW # 36393, 36470)

(1) 14 CB 167 ; (2) PLs 16 x 3/8 ; 2 PLs 10 x 3/8.

PL 16 x 3/8 T & B (A = 68.6)

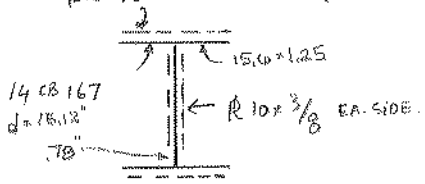

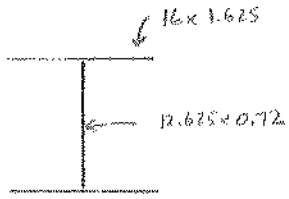

CLOSE OK

USED. LSAP SECTION # 53

VERTICAL L6 - U6. PW# 36393, 36460

(4) Ls 6×4×3/4 ; (2) PLs 14½ × 11/16 .

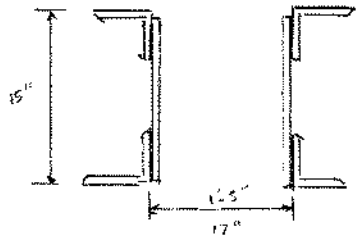

LSAP # 54

DIAGONAL U6 - L8 PW# 36393, 36469

(4) Ls 8×4×1 , (1) PL 14½ × 1 3/16

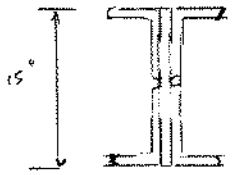

LSAP # 55

L8 - U10 PW# 36393, 36469

14 CB 167

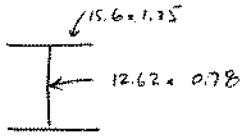

SIMPLIFIED

LSAP # 74

VERTICAL.

L10-U10 PW# 36393, 36461

(2) PLs 14½ x ¾ (4) Ls 8 x 6 x ¾

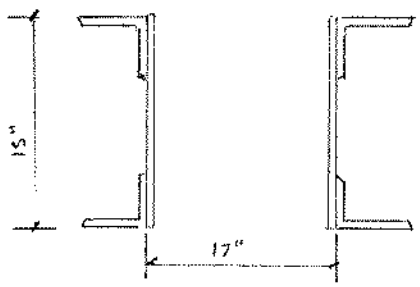

LSAP # 57

VERTICAL L12-U12 PW# 36393, 36456.

(2) [s 15x45, 2 PLs 14½ x ½ ; A total = 40.9

t [= 0.6"

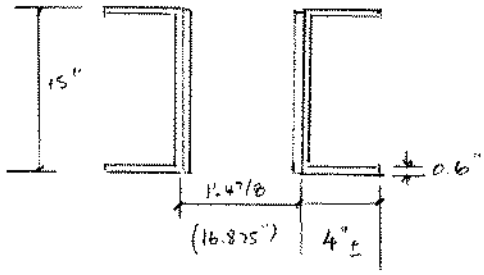

LSAP SECTION # 58

VERTICAL L14-U14 PW# 36393

(2) Ls 15" x 33.9 A total = 19.8 in²

t = 0.45"

LSAP SECTION # 59

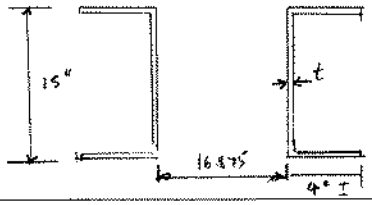

VERTICAL L16 - U16. PW# 36393, 36456.

(2) [s 15x40 ; (2) PLS 14 1/2 x 3/8. (Total Area = 34.3 in²)

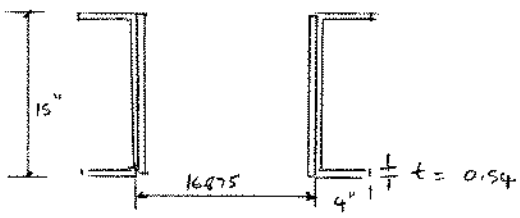

LSAP SECTION # 60.

VERTICAL L9 - U8 PW# 36393,

(2) [s 15x50.

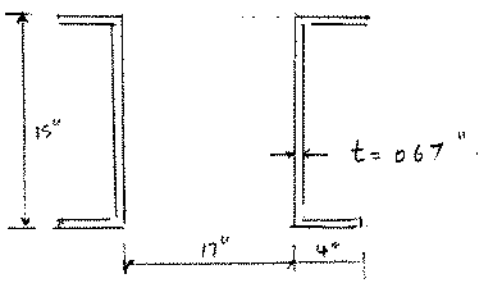

LSAP SECTION #56.

See L12-U12 Sht 38.

DIA L12 - U14 (PW# 36393)

(1) 14 CB 150, 2 PLS 16x 9/16. (A total = 62.1 in²)

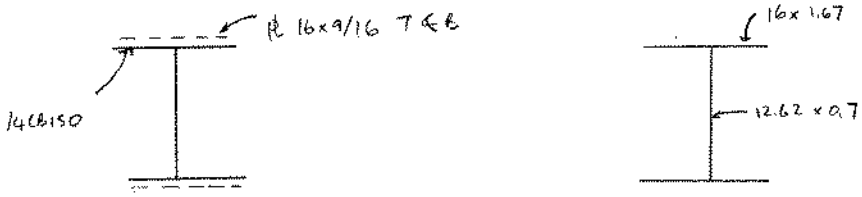

USED.

LSAP SECTION # 84

TOP STRUT. TS1. @ (12) (REF. PW# 36524, 36472).

(2) PLS 30 x 1/2 ; 4 LS 6 x 4 x 3/8.

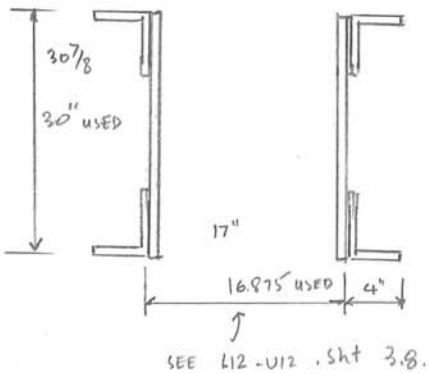

LSAP SEC. 37.

TOP CHORD BRACINGS. T'S.

T2 (PW# 36482.)

(4) LS 5 x 3 1/2 x 3/8. (TYP AT SEVERAL LOCATIONS)

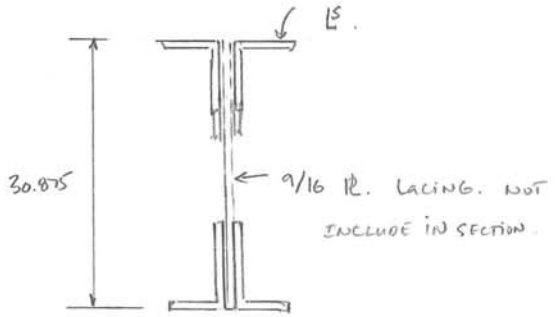

LSAP.
SECTION # 30

USE THIS SECTION FOR ALL TOP CHORD BRACINGS.

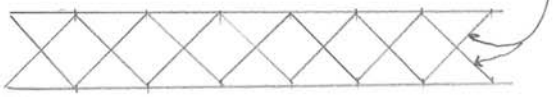

REFINE LATER IF NECESSARY

V10 - L12 . PW# 36393

(1) 14 CB 158 , (2) PLS 16 x 5/8 . A_{total} = 66.5 .

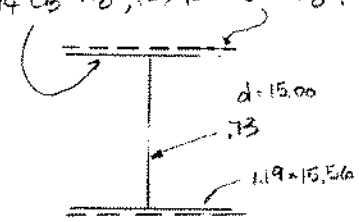

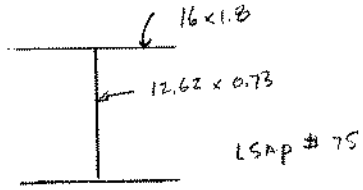

USED

SECGEN

The section properties used for LSAP structural analyses are generated using Section Generator (SECGEN). SECGEN can generate standard and custom sections. Some sections were manually entered in PROPS.DAT.

For standard section types, each type is predefined with a template, called a VAR file. The user inputs parameters about the section, such as the width, the height, and plate thicknesses. Then, SECGEN automatically calculates the plate locations, sections, point information, and section properties from the parametric information contained in the VAR file. This approach allows the user to change the plate thicknesses of a section without changing the overall geometry. The VAR files used for this project are included in the following sheets. Tapered member sections and superimposed sections are also generated using standard section types.

Custom sections are generated manually in SECGEN. All plates, sections, and point information are inputted into SECGEN.

SECTION TABLE (*.SEC file)

The section table includes all the sections generated with SECGEN. Certain sections, such as artificial members, are not generated with SECGEN and are not included in this table. Each row of the table contains information for one section. For standard section types, each row includes the section number, section type, name, and all the parameters required for its section type. For custom sections, each row includes the section number, the word “CUSTOM”, and the name of the *.UNS file that contains its section geometry data.

PROPS.DAT FILE

The PROPS.DAT file contains all the section property calculations used in the structural analysis. This file is used directly as the section properties input.

SECTION PARAMETER TITLE

TYPE	NAME	SECNO	PARAMETERS A	B	C	D	Z
CUSTOM	LowerCh_10.uns	10					
CUSTOM	LowerCh_11.uns	11					
CUSTOM	LowerCh_13.uns	13					
CUSTOM	LowerCh_14.uns	14					
CUSTOM	LowerCh_15.uns	15					
CUSTOM	LowerCh_16.uns	16					
CUSTOM	UpperCh_20.uns	20					
CUSTOM	UpperCh_21.uns	21					
CUSTOM	UpperCh_22.uns	22					
CUSTOM	UpperCh_23.uns	23					
CUSTOM	UpperCh_24.uns	24					
CUSTOM	UpperCh_25.uns	25					
CUSTOM	Vert_30.uns	30					
CUSTOM	Vert_37.uns	37					
CUSTOM	Vert_50.uns	50					
ZI	U2_L4	51	17	1	13	2.23	1
CUSTOM	Vert_52.uns	52					
Z1	L4_U6	53	16	1.625	12.625	1.31	1
CUSTOM	Vert_54.uns	54					
CUSTOM	Vert_55.uns	55					
CUSTOM	Vert_56.uns	56					
CUSTOM	Vert_57.uns	57					
CUSTOM	Vert_58.uns	58					
CUSTOM	Vert_59.uns	59					
CUSTOM	Vert_60.uns	60					
CUSTOM	Vert_61.uns	61					
ZI	14_CB_167	74	15.6	1.248	12.625	.78	1
Z1	14_CB_158_2PLS_1	75	16	1.8	12.62	.73	1
Z1	14_CB_111_10_0.5	80	14.6	.875	15.62	.86	1
ZI	14_CB_150_2PLS_1	84	16	1.67	12.62	.695	1
CUSTOM	Section_100.uns	100					

USED TO DETERMINE

I_x FOR BOOM CHORD SECTIONS

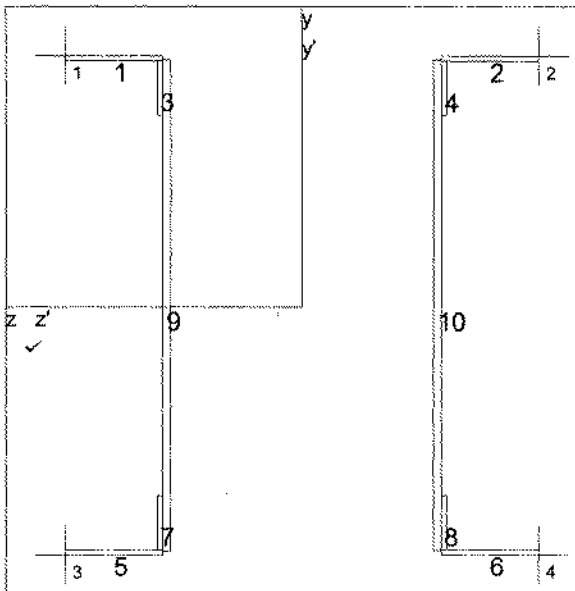

Section Number: 10

Section Type: CUSTOM
Section Name: LowerCh_10.uns
UNS File Path:
SEC File Name:
SEC File Path: x:\S1968\Calcs\LAS

Program SECGEN
Version 6. 0, Run on 10-29-2012

Property	Value
Area	41.68
Ay	34.18
Az	7.50
Iyo	3463.24
Izo	4698.21
Iyzo	0.00
2 A Cell	0.00
Ix	2.88
Iy	3463.24
Iz	4698.21
ry	9.12
rz	10.62
y' to cg	0.00
z' to cg	0.00
Beta rot	0.00 degrees

3.19
3.34 USED.
CLOSE OK.

Plate	Ly'	Lz'	L	t	y'	z'	Ty	Tz
1	0.00	6.00	6.00	0.313	15.09	11.63	0.00	0.31
2	0.00	6.00	6.00	0.313	15.09	-11.63	0.00	0.31
3	3.34	0.00	3.34	0.313	13.27	8.78	0.31	0.00
4	3.34	0.00	3.34	0.313	13.27	-8.78	0.31	0.00
5	0.00	6.00	6.00	0.313	-15.09	11.63	0.00	0.31
6	0.00	6.00	6.00	0.313	-15.09	-11.63	0.00	0.31
7	3.34	0.00	3.34	0.313	-13.27	8.78	0.31	0.00
8	3.34	0.00	3.34	0.313	-13.27	-8.78	0.31	0.00
9	30.00	0.00	30.00	0.500	0.00	8.38	0.50	0.00
10	30.00	0.00	30.00	0.500	0.00	-8.38	0.50	0.00

Pt.	y'	z'	yo	zo	Syo	Szo	y	z	Sy	Sz
1	15.25	14.63	15.25	14.63	236.8	-308.1	15.25	14.63	236.8	-308.1
2	15.25	-14.63	15.25	-14.63	-236.8	-308.1	15.25	-14.63	-236.8	-308.1
3	-15.25	14.63	-15.25	14.63	236.8	308.1	-15.25	14.63	236.8	308.1
4	-15.25	-14.63	-15.25	-14.63	-236.8	308.1	-15.25	-14.63	-236.8	308.1

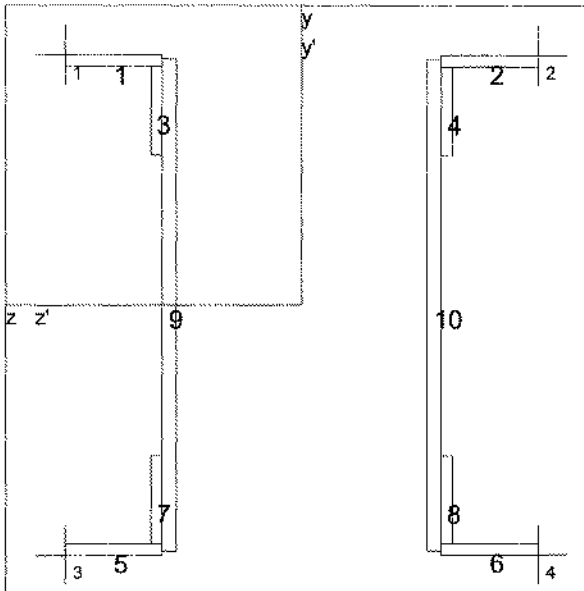

Section Number: 11

Section Type: CUSTOM
Section Name: LowerCh_11.uns
UNS File Path:
SEC File Name:
SEC File Path: x:\S1968\Calcs\LAS

Program SECGEN
Version 6. 0, Run on 10-29-2012

Property	Value
Area	83.61
Ay	67.11
Az	16.50
Iyo	6977.81
Izo	9709.55
Iyzo	0.00
2 A Cell	0.00
Ix	18.30
Iy	6977.81
Iz	9709.55
ry	9.14
rz	10.78
y' to cg	0.00
z' to cg	0.00
Beta rot	0.00 degrees

Plate	Ly'	Lz'	L	t	y'	z'	Ty	Tz
1	0.00	6.00	6.00	0.688	14.91	11.63	0.00	0.69
2	0.00	6.00	6.00	0.688	14.91	-11.63	0.00	0.69
3	5.31	0.00	5.31	0.688	11.91	8.97	0.69	0.00
4	5.31	0.00	5.31	0.688	11.91	-8.97	0.69	0.00
5	0.00	6.00	6.00	0.688	-14.91	11.63	0.00	0.69
6	0.00	6.00	6.00	0.688	-14.91	-11.63	0.00	0.69
7	5.31	0.00	5.31	0.688	-11.91	8.97	0.69	0.00
8	5.31	0.00	5.31	0.688	-11.91	-8.97	0.69	0.00
9	30.00	0.00	30.00	0.875	0.00	8.19	0.88	0.00
10	30.00	0.00	30.00	0.875	0.00	-8.19	0.88	0.00

Pt.	y'	z'	yo	zo	Syo	Szo	y	z	Sy	Sz
1	15.25	14.63	15.25	14.63	477.1	-636.7	15.25	14.63	477.1	-636.7
2	15.25	-14.63	15.25	-14.63	-477.1	-636.7	15.25	-14.63	-477.1	-636.7
3	-15.25	14.63	-15.25	14.63	477.1	636.7	-15.25	14.63	477.1	636.7
4	-15.25	-14.63	-15.25	-14.63	-477.1	636.7	-15.25	-14.63	-477.1	636.7

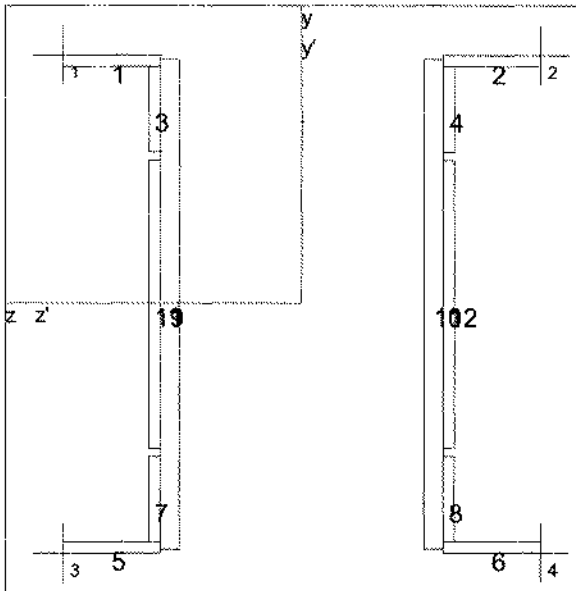

Section Number: 13

Section Type: CUSTOM
Section Name: LowerCh_13.uns
UNS File Path:
SEC File Name:
SEC File Path: x:\S1968\Calcs\LAS

Program SECGEN
Version 6. 0, Run on 10-29-2012

Property	Value
Area	126.42
Ay	109.92
Az	16.50
Iyo	10275.41
Izo	11729.89
Iyzo	0.00
2 A Cell	0.00
Ix	42.18
Iy	10275.41
Iz	11729.89
ry	9.02
rz	9.63
y' to cg	0.00
z' to cg	0.00
Beta rot	0.00 degrees

Plate	Ly'	Lz'	L	t	y'	z'	Ty	Tz
1	0.00	6.00	6.00	0.688	14.91	11.75	0.00	0.69
2	0.00	6.00	6.00	0.688	14.91	-11.75	0.00	0.69
3	5.31	0.00	5.31	0.688	11.91	9.09	0.69	0.00
4	5.31	0.00	5.31	0.688	11.91	-9.09	0.69	0.00
5	0.00	6.00	6.00	0.688	-14.91	11.75	0.00	0.69
6	0.00	6.00	6.00	0.688	-14.91	-11.75	0.00	0.69
7	5.31	0.00	5.31	0.688	-11.91	9.09	0.69	0.00
8	5.31	0.00	5.31	0.688	-11.91	-9.09	0.69	0.00
9	30.00	0.00	30.00	1.188	0.00	8.16	1.19	0.00
10	30.00	0.00	30.00	1.188	0.00	-8.16	1.19	0.00
11	17.50	0.00	17.50	0.688	0.00	9.09	0.69	0.00
12	17.50	0.00	17.50	0.688	0.00	-9.09	0.69	0.00

Pt.	y'	z'	yo	zo	Syo	Szo	y	z	Sy	Sz
1	15.25	14.75	15.25	14.75	696.6	-769.2	15.25	14.75	696.6	-769.2
2	15.25	-14.75	15.25	-14.75	-696.6	-769.2	15.25	-14.75	-696.6	-769.2
3	-15.25	14.75	-15.25	14.75	696.6	769.2	-15.25	14.75	696.6	769.2
4	-15.25	-14.75	-15.25	-14.75	-696.6	769.2	-15.25	-14.75	-696.6	769.2

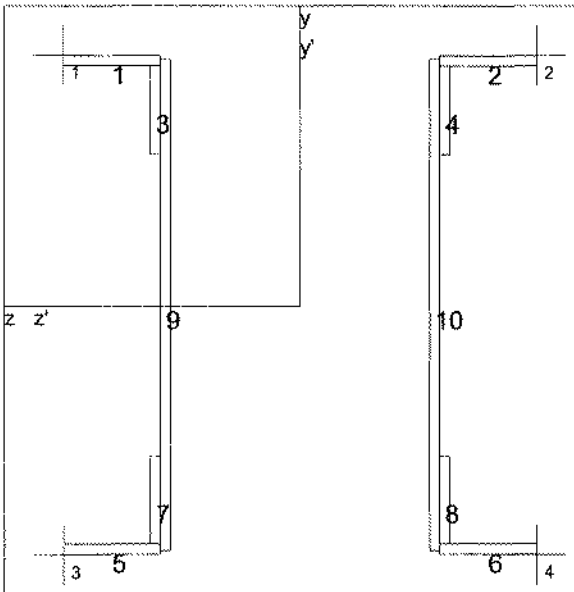

Section Number: 14

Section Type: CUSTOM
Section Name: LowerCh_14.uns
UNS File Path:
SEC File Name:
SEC File Path: x:\S1968\Calcs\LAS

Program SECGEN
Version 6. 0, Run on 10-29-2012

Property	Value
Area	65.94
Ay	50.94
Az	15.00
Iyo	5738.30
Izo	8082.98
Iyzo	0.00
2 A Cell	0.00
Ix	8.59
Iy	5738.30
Iz	8082.98
ry	9.33
rz	11.07
y' to cg	0.00
z' to cg	0.00
Beta rot	0.00 degrees

Plate	Ly'	Lz'	L	t	y'	z'	Ty	Tz
1	0.00	6.00	6.00	0.625	14.91	11.63	0.00	0.63
2	0.00	6.00	6.00	0.625	14.91	-11.63	0.00	0.63
3	5.38	0.00	5.38	0.625	11.91	8.94	0.63	0.00
4	5.38	0.00	5.38	0.625	11.91	-8.94	0.63	0.00
5	0.00	6.00	6.00	0.625	-14.91	11.63	0.00	0.63
6	0.00	6.00	6.00	0.625	-14.91	-11.63	0.00	0.63
7	5.38	0.00	5.38	0.625	-11.91	8.94	0.63	0.00
8	5.38	0.00	5.38	0.625	-11.91	-8.94	0.63	0.00
9	30.00	0.00	30.00	0.625	0.00	8.31	0.63	0.00
10	30.00	0.00	30.00	0.625	0.00	-8.31	0.63	0.00

Pt.	y'	z'	yo	zo	Syo	Szo	y	z	Sy	Sz
1	15.25	14.63	15.25	14.63	392.4	-530.0	15.25	14.63	392.4	-530.0
2	15.25	-14.63	15.25	-14.63	-392.4	-530.0	15.25	-14.63	-392.4	-530.0
3	-15.25	14.63	-15.25	14.63	392.4	530.0	-15.25	14.63	392.4	530.0
4	-15.25	-14.63	-15.25	-14.63	-392.4	530.0	-15.25	-14.63	-392.4	530.0

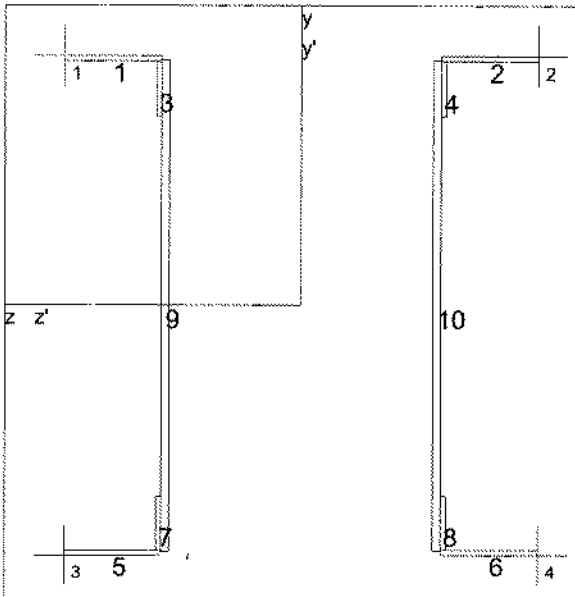

Section Number: 15

Section Type: CUSTOM
Section Name: LowerCh_15.uns
UNS File Path:
SEC File Name: Sec.sec
SEC File Path: x:\S1968\Calcs\LAS\

Program SECGEN
Version 6. 0, Run on 11-07-2012

Property	Value
Area	41.68
Ay	34.18
Az	7.50
Iyo	3463.24
Izo	4698.21
Iyzo	0.00
2 A Cell	0.00
Ix	2.88
Iy	3463.24
Iz	4698.21
ry	9.12
rz	10.62
y' to cg	0.00
z' to cg	0.00
Beta rot	0.00 degrees

3.19
3.34 USED.
CLOSE OK.

Plate	Ly'	Lz'	L	t	y'	z'	Ty	Tz
1	0.00	6.00	6.00	0.313	15.09	11.63	0.00	0.31
2	0.00	6.00	6.00	0.313	15.09	-11.63	0.00	0.31
3	3.34	0.00	3.34	0.313	13.27	8.78	0.31	0.00
4	3.34	0.00	3.34	0.313	13.27	-8.78	0.31	0.00
5	0.00	6.00	6.00	0.313	-15.09	11.63	0.00	0.31
6	0.00	6.00	6.00	0.313	-15.09	-11.63	0.00	0.31
7	3.34	0.00	3.34	0.313	-13.27	8.78	0.31	0.00
8	3.34	0.00	3.34	0.313	-13.27	-8.78	0.31	0.00
9	30.00	0.00	30.00	0.500	0.00	8.38	0.50	0.00
10	30.00	0.00	30.00	0.500	0.00	-8.38	0.50	0.00

Pt.	y'	z'	yo	zo	Syo	Szo	y	z	Sy	Sz
1	15.25	14.63	15.25	14.63	236.8	-308.1	15.25	14.63	236.8	-308.1
2	15.25	-14.63	15.25	-14.63	-236.8	-308.1	15.25	-14.63	-236.8	-308.1
3	-15.25	14.63	-15.25	14.63	236.8	308.1	-15.25	14.63	236.8	308.1
4	-15.25	-14.63	-15.25	-14.63	-236.8	308.1	-15.25	-14.63	-236.8	308.1

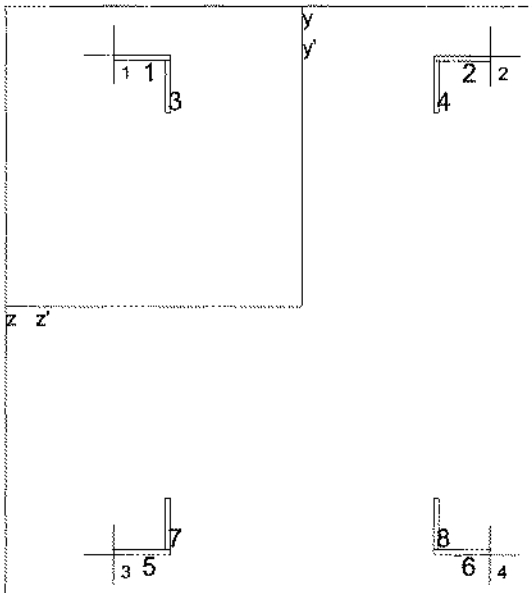

Section Number: 16

Section Type: CUSTOM
Section Name: LowerCh_16.uns
UNS File Path:
SEC File Name:
SEC File Path: x:\S1968\Calcs\LAS

Program SECGEN
Version 6. 0. Run on 10-29-2012

Property	Value
Area	8.36
Ay	3.98
Az	4.38
Iyo	704.38
Izo	1709.58
Iyzo	0.00
2 A Cell	0.00
Ix	0.27
Iy	704.38
Iz	1709.58
ry	9.18
rz	14.30
y' to cg	0.00
z' to cg	0.00
Beta rot	0.00 degrees

Plate	Ly'	Lz'	L	t	y'	z'	Ty	Tz
1	0.00	3.50	3.50	0.313	15.09	9.88	0.00	0.31
2	0.00	3.50	3.50	0.313	15.09	-9.88	0.00	0.31
3	3.19	0.00	3.19	0.313	13.34	8.28	0.31	0.00
4	3.19	0.00	3.19	0.313	13.34	-8.28	0.31	0.00
5	0.00	3.50	3.50	0.313	-15.09	9.88	0.00	0.31
6	0.00	3.50	3.50	0.313	-15.09	-9.88	0.00	0.31
7	3.19	0.00	3.19	0.313	-13.34	8.28	0.31	0.00
8	3.19	0.00	3.19	0.313	-13.34	-8.28	0.31	0.00

7.97 CLOSE ENC

Pt.	y'	z'	yo	zo	Syo	Szo	y	z	Sy	Sz
1	15.25	11.63	15.25	11.63	60.6	-112.1	15.25	11.63	60.6	-112.1
2	15.25	-11.63	15.25	-11.63	-60.6	-112.1	15.25	-11.63	-60.6	-112.1
3	-15.25	11.63	-15.25	11.63	60.6	112.1	-15.25	11.63	60.6	112.1
4	-15.25	-11.63	-15.25	-11.63	-60.6	112.1	-15.25	-11.63	-60.6	112.1

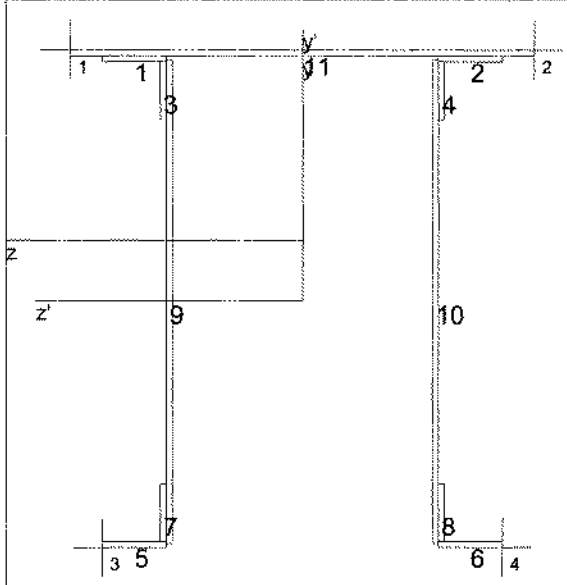

Section Number: 20

Section Type: CUSTOM
Section Name: UpperCh_20.uns
UNS File Path:
SEC File Name:
SEC File Path: x:\S1968\Calcs\LAS

Program SECGEN
Version 6. 0, Run on 10-29-2012

Property	Value
Area	44.81
Ay	27.94
Az	16.88
Iyo	3397.06
Izo	5945.47
Iyzo	0.00
2 A Cell	0.00
Ix	2.10
Iy	3397.06
Iz	5945.47
ry	8.71
rz	11.52
y' to cg	3.75
z' to cg	0.00
Beta rot	0.00 degrees

Plate	Ly'	Lz'	L	t	y'	z'	Ty	Tz
1	0.00	4.00	4.00	0.375	15.06	10.50	0.00	0.38
2	0.00	4.00	4.00	0.375	15.06	-10.50	0.00	0.38
3	3.63	0.00	3.63	0.375	13.06	8.69	0.38	0.00
4	3.63	0.00	3.63	0.375	13.06	-8.69	0.38	0.00
5	0.00	4.00	4.00	0.375	-15.06	10.50	0.00	0.38
6	0.00	4.00	4.00	0.375	-15.06	-10.50	0.00	0.38
7	3.63	0.00	3.63	0.375	-13.06	8.69	0.38	0.00
8	3.63	0.00	3.63	0.375	-13.06	-8.69	0.38	0.00
9	30.00	0.00	30.00	0.375	0.00	8.31	0.38	0.00
10	30.00	0.00	30.00	0.375	0.00	-8.31	0.38	0.00
11	0.00	29.00	29.00	0.375	15.44	0.00	0.00	0.38

Pt.	y'	z'	yo	zo	Syo	Szo	y	z	Sy	Sz
1	15.63	14.50	11.88	14.50	234.3	-500.5	11.88	14.50	234.3	-500.5
2	15.63	-14.50	11.88	-14.50	-234.3	-500.5	11.88	-14.50	-234.3	-500.5
3	-15.25	12.50	-19.00	12.50	271.8	313.0	-19.00	12.50	271.8	313.0
4	-15.25	-12.50	-19.00	-12.50	-271.8	313.0	-19.00	-12.50	-271.8	313.0

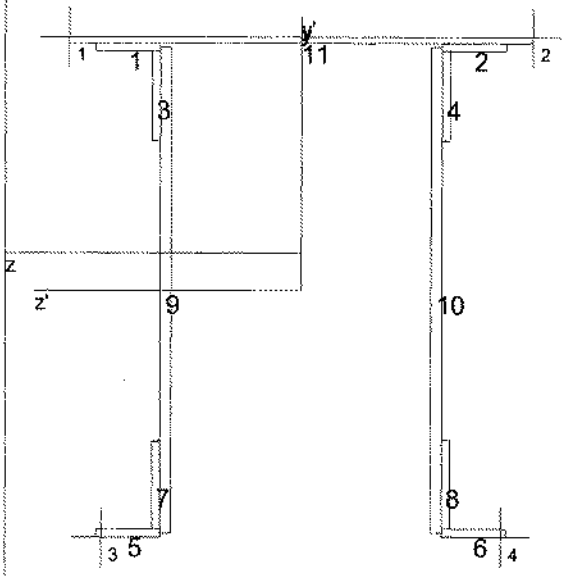

Section Number: 21

Section Type: CUSTOM
Section Name: UpperCh_21.uns
UNS File Path:
SEC File Name:
SEC File Path: x:\S1968\Calcs\LAS

Program SECGEN
Version 6. 0, Run on 10-29-2012

Property	Value
Area	71.13
Ay	52.25
Az	18.88
Iyo	5572.43
Izo	8701.20
Iyzo	-0.12
2 A Cell	0.00
Ix	8.59
Iy	5572.43
Iz	8701.20
ry	8.85
rz	11.06
y' to cg	2.36
z' to cg	0.00
Beta rot	0.00 degrees

Plate	Ly'	Lz'	L	t	y'	z'	Ty	Tz
1	0.00	4.00	4.00	0.500	15.00	10.83	0.00	0.50
2	0.00	4.00	4.00	0.500	15.00	-10.81	0.00	0.50
3	5.50	0.00	5.50	0.500	12.00	9.06	0.50	0.00
4	5.50	0.00	5.50	0.500	12.00	-9.06	0.50	0.00
5	0.00	4.00	4.00	0.500	-15.00	10.83	0.00	0.50
6	0.00	4.00	4.00	0.500	-15.00	-10.81	0.00	0.50
7	5.50	0.00	5.50	0.500	-12.00	9.06	0.50	0.00
8	5.50	0.00	5.50	0.500	-12.00	-9.06	0.50	0.00
9	30.00	0.00	30.00	0.688	0.00	8.47	0.69	0.00
10	30.00	0.00	30.00	0.688	0.00	-8.47	0.69	0.00
11	0.00	29.00	29.00	0.375	15.44	0.00	0.00	0.37

Pt.	y'	z'	yo	zo	Syo	Szo	y	z	Sy	Sz
1	15.63	14.50	13.26	14.50	384.3	-656.0	13.26	14.50	384.3	-656.0
2	15.63	-14.50	13.26	-14.50	-384.3	-656.0	13.27	-14.50	-384.3	-655.9
3	-15.25	12.50	-17.61	12.50	445.8	494.1	-17.61	12.50	445.8	494.1
4	-15.25	-12.50	-17.61	-12.50	-445.8	494.1	-17.61	-12.50	-445.7	494.1

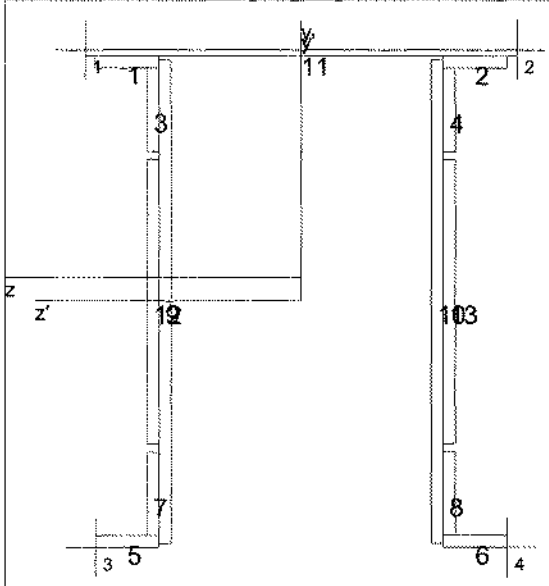

Section Number: 22

Section Type: CUSTOM
Section Name: UpperCh_22.uns
UNS File Path:
SEC File Name:
SEC File Path: x:\S1968\Calcs\LAS

Program SECGEN
Version 6. 0, Run on 10-29-2012

Property	Value
Area	109.13
Ay	87.00
Az	22.13
Iyo	8899.23
Izo	11147.03
Iyzo	0.00
2 A Cell	0.00
Ix	19.04
Iy	8899.23
Iz	11147.03
ry	9.03
rz	10.11
y' to cg	1.43
z' to cg	0.00
Beta rot	0.00 degrees

Plate	Ly'	Lz'	L	t	y'	z'	Ty	Tz
1	0.00	4.00	4.00	0.750	14.88	10.88	0.00	0.75
2	0.00	4.00	4.00	0.750	14.88	-10.88	0.00	0.75
3	5.25	0.00	5.25	0.750	11.88	9.25	0.75	0.00
4	5.25	0.00	5.25	0.750	11.88	-9.25	0.75	0.00
5	0.00	4.00	4.00	0.750	-14.88	10.88	0.00	0.75
6	0.00	4.00	4.00	0.750	-14.88	-10.88	0.00	0.75
7	5.25	0.00	5.25	0.750	-11.88	9.25	0.75	0.00
8	5.25	0.00	5.25	0.750	-11.88	-9.25	0.75	0.00
9	30.00	0.00	30.00	0.750	0.00	8.50	0.75	0.00
10	30.00	0.00	30.00	0.750	0.00	-8.50	0.75	0.00
11	0.00	27.00	27.00	0.375	15.44	0.00	0.00	0.38
12	17.50	0.00	17.50	0.750	0.00	9.25	0.75	0.00
13	17.50	0.00	17.50	0.750	0.00	-9.25	0.75	0.00

Pt.	y'	z'	yo	zo	Syo	Szo	y	z	Sy	Sz
1	15.63	13.50	14.19	13.50	659.2	-785.4	14.19	13.50	659.2	-785.4
2	15.63	-13.50	14.19	-13.50	-659.2	-785.4	14.19	-13.50	-659.2	-785.4
3	-15.25	12.88	-16.68	12.88	691.2	668.2	-16.68	12.88	691.2	668.2
4	-15.25	-12.88	-16.68	-12.88	-691.2	668.2	-16.68	-12.88	-691.2	668.2

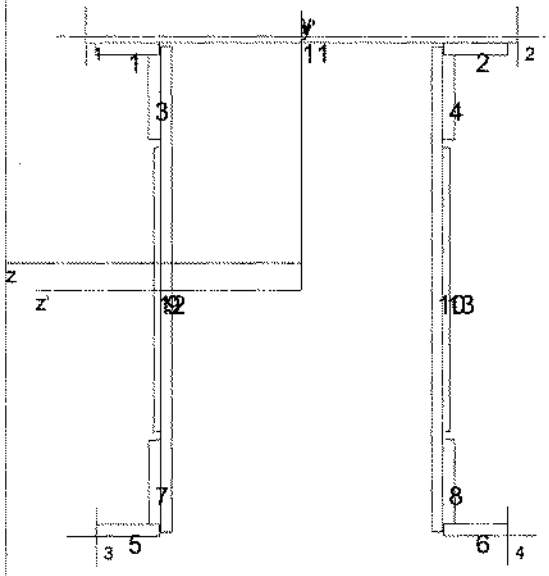

Section Number: 23

Section Type: CUSTOM
Section Name: UpperCh_23.uns
UNS File Path:
SEC File Name:
SEC File Path: x:\S1968\Calcs\LAS

Program SECGEN
Version 6. 0, Run on 10-29-2012

Property	Value
Area	94.44
Ay	72.31
Az	22.13
Iyo	7589.57
Izo	10551.83
Iyzo	0.00
2 A Cell	0.00
Ix	13.15
Iy	7589.57
Iz	10551.83
ry	8.96
rz	10.57
y' to cg	1.66
z' to cg	0.00
Beta rot	0.00 degrees

Plate	Ly'	Lz'	L	t	y'	z'	Ty	Tz
1	0.00	4.00	4.00	0.750	14.88	10.88	0.00	0.75
2	0.00	4.00	4.00	0.750	14.88	-10.88	0.00	0.75
3	5.25	0.00	5.25	0.750	11.88	9.19	0.75	0.00
4	5.25	0.00	5.25	0.750	11.88	-9.19	0.75	0.00
5	0.00	4.00	4.00	0.750	-14.88	10.88	0.00	0.75
6	0.00	4.00	4.00	0.750	-14.88	-10.88	0.00	0.75
7	5.25	0.00	5.25	0.750	-11.88	9.19	0.75	0.00
8	5.25	0.00	5.25	0.750	-11.88	-9.19	0.75	0.00
9	30.00	0.00	30.00	0.688	0.00	8.47	0.69	0.00
10	30.00	0.00	30.00	0.688	0.00	-8.47	0.69	0.00
11	0.00	27.00	27.00	0.375	15.44	0.00	0.00	0.38
12	17.50	0.00	17.50	0.438	0.00	9.03	0.44	0.00
13	17.50	0.00	17.50	0.438	0.00	-9.03	0.44	0.00

Pt.	y'	z'	yo	zo	Syo	Szo	y	z	Sy	Sz
1	15.63	13.50	13.97	13.50	562.2	-755.3	13.97	13.50	562.2	-755.3
2	15.63	-13.50	13.97	-13.50	-562.2	-755.3	13.97	-13.50	-562.2	-755.3
3	-15.25	12.88	-16.91	12.88	589.5	624.2	-16.91	12.88	589.5	624.2
4	-15.25	-12.88	-16.91	-12.88	-589.5	624.2	-16.91	-12.88	-589.5	624.2

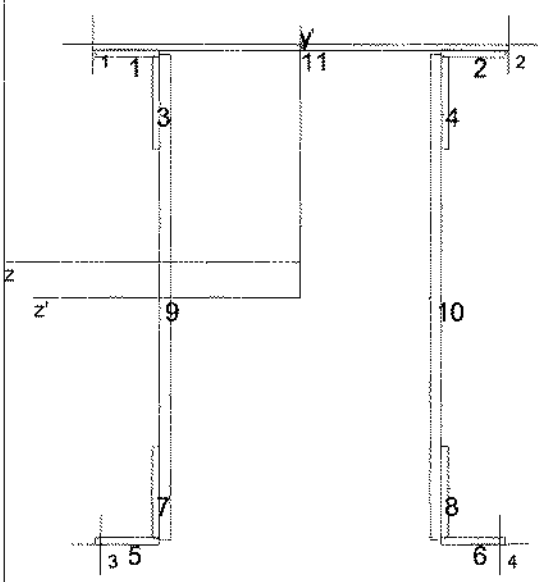

Section Number: 24

Section Type: CUSTOM
Section Name: UpperCh_24.uns
UNS File Path:
SEC File Name:
SEC File Path: x:\S1968\Calcs\LAS

Program SECGEN
Version 6. 0, Run on 10-29-2012

Property	Value
Area	67.84
Ay	51.09
Az	16.75
Iyo	5140.11
Izo	8130.04
Iyzo	0.00
2 A Cell	0.00
Ix	8.03
Iy	5140.11
Iz	8130.04
ry	8.70
rz	10.95
y' to cg	2.22
z' to cg	0.00
Beta rot	0.00 degrees

Plate	Ly'	Lz'	L	t	y'	z'	Ty	Tz
1	0.00	4.00	4.00	0.438	15.06	10.81	0.00	0.44
2	0.00	4.00	4.00	0.438	15.06	-10.81	0.00	0.44
3	5.63	0.00	5.63	0.438	12.06	9.03	0.44	0.00
4	5.63	0.00	5.63	0.438	12.06	-9.03	0.44	0.00
5	0.00	4.00	4.00	0.438	-15.06	10.81	0.00	0.44
6	0.00	4.00	4.00	0.438	-15.06	-10.81	0.00	0.44
7	5.63	0.00	5.63	0.438	-12.06	9.03	0.44	0.00
8	5.63	0.00	5.63	0.438	-12.06	-9.03	0.44	0.00
9	30.00	0.00	30.00	0.688	0.00	8.47	0.69	0.00
10	30.00	0.00	30.00	0.688	0.00	-8.47	0.69	0.00
11	0.00	26.00	26.00	0.375	15.44	0.00	0.00	0.38

Pt.	y'	z'	yo	zo	Syo	Szo	y	z	Sy	Sz
1	15.63	13.00	13.41	13.00	395.4	-606.4	13.41	13.00	395.4	-606.4
2	15.63	-13.00	13.41	-13.00	-395.4	-606.4	13.41	-13.00	-395.4	-606.4
3	-15.25	12.50	-17.47	12.50	411.2	465.4	-17.47	12.50	411.2	465.4
4	-15.25	-12.50	-17.47	-12.50	-411.2	465.4	-17.47	-12.50	-411.2	465.4

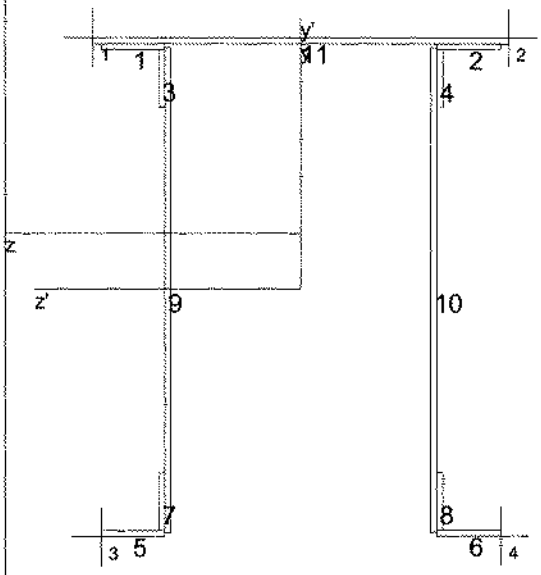

Section Number: 25

Section Type: CUSTOM
Section Name: UpperCh_25.uns
UNS File Path:
SEC File Name:
SEC File Path: x:\S1968\Calcs\LAS

Program SECGEN
Version 6. 0, Run on 10-29-2012

Property	Value
Area	43.69
Ay	27.94
Az	15.75
Iyo	3184.16
Izo	5787.72
Iyzo	0.00
2 A Cell	0.00
Ix	2.05
Iy	3184.16
Iz	5787.72
ry	8.54
rz	11.51
y' to cg	3.45
z' to cg	0.00
Beta rot	0.00 degrees

Plate	Ly'	Lz'	L	t	y'	z'	Ty	Tz
1	0.00	4.00	4.00	0.375	15.06	10.50	0.00	0.38
2	0.00	4.00	4.00	0.375	15.06	-10.50	0.00	0.38
3	3.63	0.00	3.63	0.375	13.06	8.69	0.38	0.00
4	3.63	0.00	3.63	0.375	13.06	-8.69	0.38	0.00
5	0.00	4.00	4.00	0.375	-15.06	10.50	0.00	0.38
6	0.00	4.00	4.00	0.375	-15.06	-10.50	0.00	0.38
7	3.63	0.00	3.63	0.375	-13.06	8.69	0.38	0.00
8	3.63	0.00	3.63	0.375	-13.06	-8.69	0.38	0.00
9	30.00	0.00	30.00	0.375	0.00	8.31	0.38	0.00
10	30.00	0.00	30.00	0.375	0.00	-8.31	0.38	0.00
11	0.00	26.00	26.00	0.375	15.44	0.00	0.00	0.38

Pt.	y'	z'	yo	zo	Syo	Szo	y	z	Sy	Sz
1	15.63	13.00	12.18	13.00	244.9	-475.2	12.18	13.00	244.9	-475.2
2	15.63	-13.00	12.18	-13.00	-244.9	-475.2	12.18	-13.00	-244.9	-475.2
3	-15.25	12.50	-18.70	12.50	254.7	309.6	-18.70	12.50	254.7	309.6
4	-15.25	-12.50	-18.70	-12.50	-254.7	309.6	-18.70	-12.50	-254.7	309.6

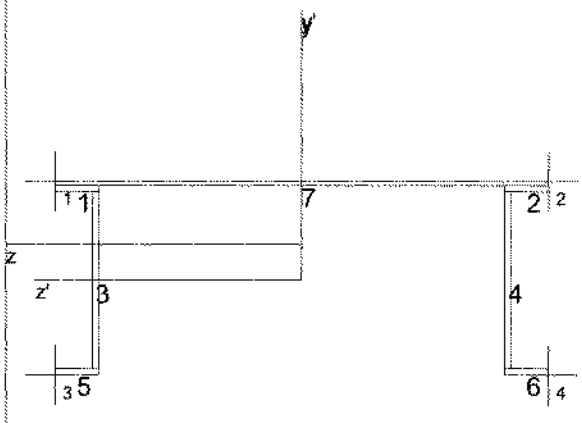

Section Number: 50

Section Type: CUSTOM
Section Name: Vert_50.uns
UNS File Path:
SEC File Name:
SEC File Path: x:\S1968\Calcs\LAS

Program SECGEN
Version 6. 0, Run on 10-29-2012

Property	Value
Area	33.34
Ay	14.00
Az	19.34
Iyo	7691.88
Izo	1052.56
Iyzo	0.00
2 A Cell	0.00
Ix	2.15
Iy	7691.88
Iz	1052.56
ry	15.19
rz	5.62
y' to cg	2.83
z' to cg	0.00
Beta rot	0.00 degrees

Plate	Ly'	Lz'	L	t	y'	z'	Ty	Tz
1	0.00	3.50	3.50	0.500	7.25	18.00	0.00	0.50
2	0.00	3.50	3.50	0.500	7.25	-18.00	0.00	0.50
3	14.00	0.00	14.00	0.500	0.00	16.50	0.50	0.00
4	14.00	0.00	14.00	0.500	0.00	-16.50	0.50	0.00
5	0.00	3.50	3.50	0.500	-7.25	18.00	0.00	0.50
6	0.00	3.50	3.50	0.500	-7.25	-18.00	0.00	0.50
7	0.00	39.50	39.50	0.313	7.66	0.00	0.00	0.31

Pt.	y'	z'	yo	zo	Syo	Szo	y	z	Sy	Sz
1	7.81	19.75	4.98	19.75	389.5	-211.4	4.98	19.75	389.5	-211.4
2	7.81	-19.75	4.98	-19.75	-389.5	-211.4	4.98	-19.75	-389.5	-211.4
3	-7.50	19.75	-10.33	19.75	389.5	101.9	-10.33	19.75	389.5	101.9
4	-7.50	-19.75	-10.33	-19.75	-389.5	101.9	-10.33	-19.75	-389.5	101.9

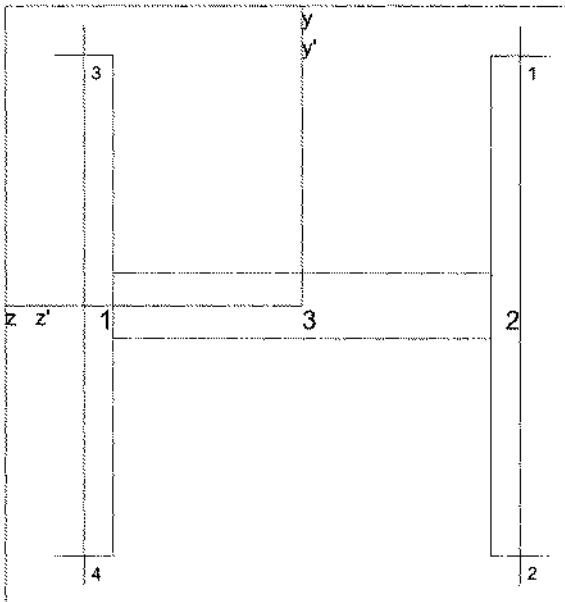

Section Number: 51

Section Type: ZI
Section Name: U2_L4
SEC File Name:
SEC File Path: x:\S1968\Calcs\LAS

Program SECGEN
Version 6. 0, Run on 11-07-2012

Property	Value
Area	62.99
Ay	34.00
Az	28.99
Iyo	2077.11
Izo	830.85
Iyzo	0.00
2 A Cell	0.00
Ix	59.39
Iy	2077.11
Iz	830.85
ry	5.74
rz	3.63
y' to cg	0.00
z' to cg	0.00
Beta rot	0.00 degrees

Plate	Ly'	Lz'	L	t	y'	z'	Ty	Tz
1	17.00	0.00	17.00	1.000	0.00	7.00	1.00	0.00
2	17.00	0.00	17.00	1.000	0.00	-7.00	1.00	0.00
3	0.00	13.00	13.00	2.230	0.00	0.00	0.00	2.23

Pt.	y'	z'	yo	zo	Syo	Szo	y	z	Sy	Sz
1	8.50	-7.50	8.50	-7.50	-276.9	-97.7	8.50	-7.50	-276.9	-97.7
2	-8.50	-7.50	-8.50	-7.50	-276.9	97.7	-8.50	-7.50	-276.9	97.7
3	8.50	7.50	8.50	7.50	276.9	-97.7	8.50	7.50	276.9	-97.7
4	-8.50	7.50	-8.50	7.50	276.9	97.7	-8.50	7.50	276.9	97.7

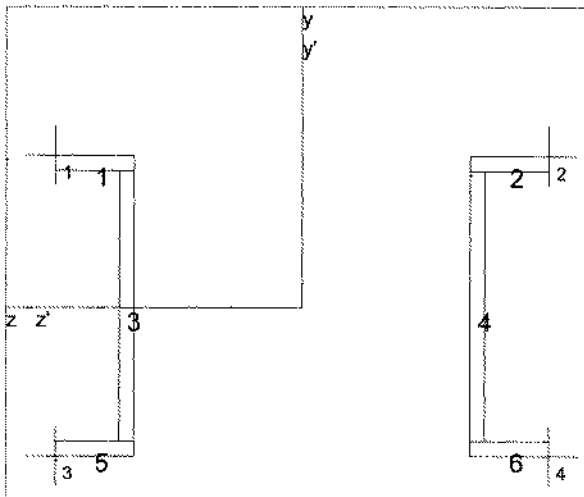

Section Number: 52

Section Type: CUSTOM
Section Name: Vert_52.uns
UNS File Path:
SEC File Name:
SEC File Path: x:\S1968\Calcs\LAS

Program SECGEN
Version 6. 0, Run on 10-29-2012

Property	Value
Area	32.25
Ay	20.25
Az	12.00
Iyo	2934.95
Izo	917.30
Iyzo	0.00
2 A Cell	0.00
Ix	6.05
Iy	2934.95
Iz	917.30
ry	9.54
rz	5.33
y' to cg	0.00
z' to cg	0.00
Beta rot	0.00 degrees

Plate	Ly'	Lz'	L	t	y'	z'	Ty	Tz
1	0.00	4.00	4.00	0.750	7.13	10.50	0.00	0.75
2	0.00	4.00	4.00	0.750	7.13	-10.50	0.00	0.75
3	13.50	0.00	13.50	0.750	0.00	8.88	0.75	0.00
4	13.50	0.00	13.50	0.750	0.00	-8.88	0.75	0.00
5	0.00	4.00	4.00	0.750	-7.13	10.50	0.00	0.75
6	0.00	4.00	4.00	0.750	-7.13	-10.50	0.00	0.75

Pt.	y'	z'	yo	zo	Syo	Szo	y	z	Sy	Sz
1	7.50	12.50	7.50	12.50	234.8	-122.3	7.50	12.50	234.8	-122.3
2	7.50	-12.50	7.50	-12.50	-234.8	-122.3	7.50	-12.50	-234.8	-122.3
3	-7.50	12.50	-7.50	12.50	234.8	122.3	-7.50	12.50	234.8	122.3
4	-7.50	-12.50	-7.50	-12.50	-234.8	122.3	-7.50	-12.50	-234.8	122.3

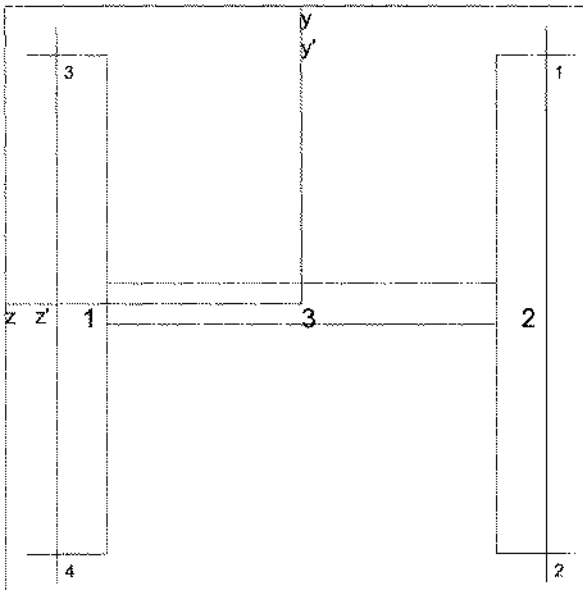

Section Number: 53

Section Type: ZI
Section Name: L4_U6
SEC File Name:
SEC File Path: x:\S1968\Calcs\LAS

Program SECGEN
Version 6. 0, Run on 10-29-2012

Property	Value
Area	68.54 ← MATCHES (E) DWG
Ay	52.00
Az	16.54
Iyo	2870.93
Izo	1111.70
Iyzo	0.00
2 A Cell	0.00
Ix	55.23
Iy	2870.93
Iz	1111.70
rY	6.47
rz	4.03
y' to cg	0.00
z' to cg	0.00
Beta rot	0.00 degrees

Plate	Ly'	Lz'	L	t	y'	z'	Ty	Tz
1	16.00	0.00	16.00	1.625	0.00	7.13	1.63	0.00
2	16.00	0.00	16.00	1.625	0.00	-7.13	1.63	0.00
3	0.00	12.63	12.63	1.310	0.00	0.00	0.00	1.31

Pt.	y'	z'	yo	zo	Syo	Szo	y	z	Sy	Sz
1	8.00	-7.94	8.00	-7.94	-361.7	-139.0	8.00	-7.94	-361.7	-139.0
2	-8.00	-7.94	-8.00	-7.94	-361.7	139.0	-8.00	-7.94	-361.7	139.0
3	8.00	7.94	8.00	7.94	361.7	-139.0	8.00	7.94	361.7	-139.0
4	-8.00	7.94	-8.00	7.94	361.7	139.0	-8.00	7.94	361.7	139.0

SECTION IS SIMPLIFIED

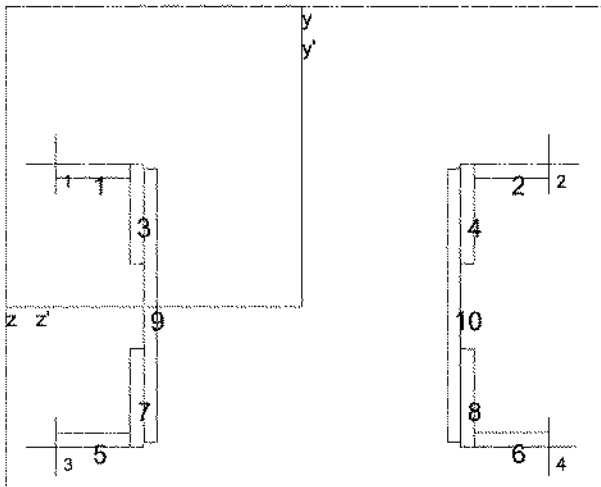

Section Number: 54

Section Type: CUSTOM
Section Name: Vert_54.uns
UNS File Path:
SEC File Name:
SEC File Path: x:\S1968\Calcs\LAS

Program SECGEN
Version 6. 0, Run on 10-29-2012

Property	Value
Area	47.69 ← CLOSE OK
Ay	35.69
Az	12.00
Iyo	4103.18
Izo	1369.56
Iyzo	0.00
2 A Cell	0.00
Ix	8.34
Iy	4103.18
Iz	1369.56
ry	9.28
rz	5.36
y' to cg	0.00
z' to cg	0.00
Beta rot	0.00 degrees

Plate	Ly'	Lz'	L	t	y'	z'	Ty	Tz
1	0.00	4.00	4.00	0.750	7.13	11.25	0.00	0.75
2	0.00	4.00	4.00	0.750	7.13	-11.25	0.00	0.75
3	5.25	0.00	5.25	0.750	4.88	8.88	0.75	0.00
4	5.25	0.00	5.25	0.750	4.88	-8.88	0.75	0.00
5	0.00	4.00	4.00	0.750	-7.13	11.25	0.00	0.75
6	0.00	4.00	4.00	0.750	-7.13	-11.25	0.00	0.75
7	5.25	0.00	5.25	0.750	-4.88	8.88	0.75	0.00
8	5.25	0.00	5.25	0.750	-4.88	-8.88	0.75	0.00
9	14.50	0.00	14.50	0.688	0.00	8.16	0.69	0.00
10	14.50	0.00	14.50	0.688	0.00	-8.16	0.69	0.00

Pt.	y'	z'	yo	zo	Syo	Szo	y	z	Sy	Sz
1	7.50	13.25	7.50	13.25	309.7	-182.6	7.50	13.25	309.7	-182.6
2	7.50	-13.25	7.50	-13.25	-309.7	-182.6	7.50	-13.25	-309.7	-182.6
3	-7.50	13.25	-7.50	13.25	309.7	182.6	-7.50	13.25	309.7	182.6
4	-7.50	-13.25	-7.50	-13.25	-309.7	182.6	-7.50	-13.25	-309.7	182.6

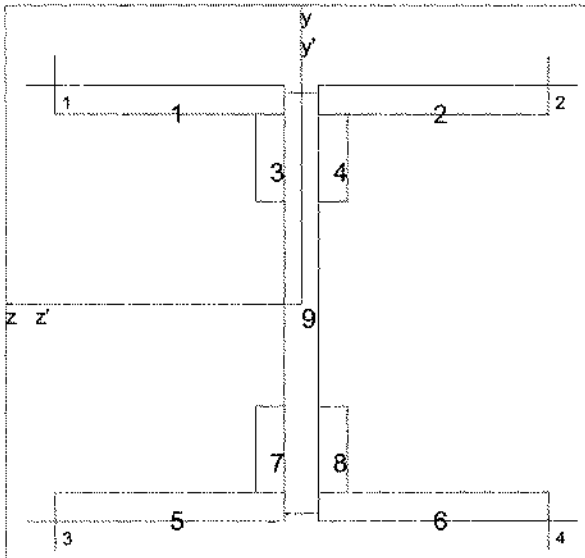

Section Number: 55

Section Type: CUSTOM
Section Name: Vert.55.uns
UNS File Path:
SEC File Name:
SEC File Path: x:\S1968\Calcs\LAS

Program SECGEN
Version 6. 0, Run on 10-29-2012

Property	Value
Area	61.22
Ay	29.22
Az	32.00
Iyo	863.34
Izo	2181.35
Iyzo	0.00
2 A Cell	0.00
Ix	22.76
Iy	863.34
Iz	2181.35
ry	3.76
rz	5.97
y' to cg	0.00
z' to cg	0.00
Beta rot	0.00 degrees

Plate	Ly'	Lz'	L	t	y'	z'	Ty	Tz
1	0.00	8.00	8.00	1.000	7.00	4.59	0.00	1.00
2	0.00	8.00	8.00	1.000	7.00	-4.59	0.00	1.00
3	3.00	0.00	3.00	1.000	5.00	1.09	1.00	0.00
4	3.00	0.00	3.00	1.000	5.00	-1.09	1.00	0.00
5	0.00	8.00	8.00	1.000	-7.00	4.59	0.00	1.00
6	0.00	8.00	8.00	1.000	-7.00	-4.59	0.00	1.00
7	3.00	0.00	3.00	1.000	-5.00	1.09	1.00	0.00
8	3.00	0.00	3.00	1.000	-5.00	-1.09	1.00	0.00
9	14.50	0.00	14.50	1.188	0.00	0.00	1.19	0.00

Pt.	y'	z'	yo	zo	Syo	Szo	y	z	Sy	Sz
1	7.50	8.59	7.50	8.59	100.5	-290.8	7.50	8.59	100.5	-290.8
2	7.50	-8.59	7.50	-8.59	-100.5	-290.8	7.50	-8.59	-100.5	-290.8
3	-7.50	8.59	-7.50	8.59	100.5	290.8	-7.50	8.59	100.5	290.8
4	-7.50	-8.59	-7.50	-8.59	-100.5	290.8	-7.50	-8.59	-100.5	290.8

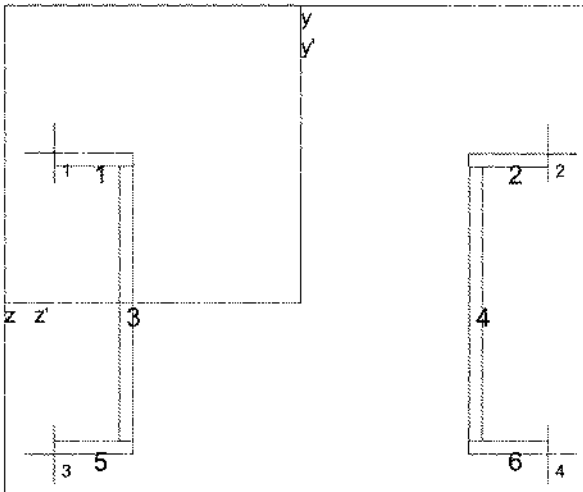

Section Number: 56

Section Type: CUSTOM
Section Name: Vert_56.uns
UNS File Path:
SEC File Name:
SEC File Path: x:\S1968\Calcs\LAS

Program SECGEN
Version 6. 0, Run on 10-29-2012

Property	Value
Area	29.02
Ay	18.30
Az	10.72
Iyo	2631.48
Izo	835.36
Iyzo	0.00
2 A Cell	0.00
Ix	4.34
Iy	2631.48
Iz	835.36
ry	9.52
rz	5.36
y' to cg	0.00
z' to cg	0.00
Beta rot	0.00 degrees

Plate	Ly'	Lz'	L	t	y'	z'	Ty	Tz
1	0.00	4.00	4.00	0.670	7.17	10.50	0.00	0.67
2	0.00	4.00	4.00	0.670	7.17	-10.50	0.00	0.67
3	13.66	0.00	13.66	0.670	0.00	8.85	0.67	0.00
4	13.66	0.00	13.66	0.670	0.00	-8.85	0.67	0.00
5	0.00	4.00	4.00	0.670	-7.17	10.50	0.00	0.67
6	0.00	4.00	4.00	0.670	-7.17	-10.50	0.00	0.67

Pt.	y'	z'	yo	zo	Syo	Szo	y	z	Sy	Sz
1	7.50	12.50	7.50	12.50	210.5	-111.4	7.50	12.50	210.5	-111.4
2	7.50	-12.50	7.50	-12.50	-210.5	-111.4	7.50	-12.50	-210.5	-111.4
3	-7.50	12.50	-7.50	12.50	210.5	111.4	-7.50	12.50	210.5	111.4
4	-7.50	-12.50	-7.50	-12.50	-210.5	111.4	-7.50	-12.50	-210.5	111.4

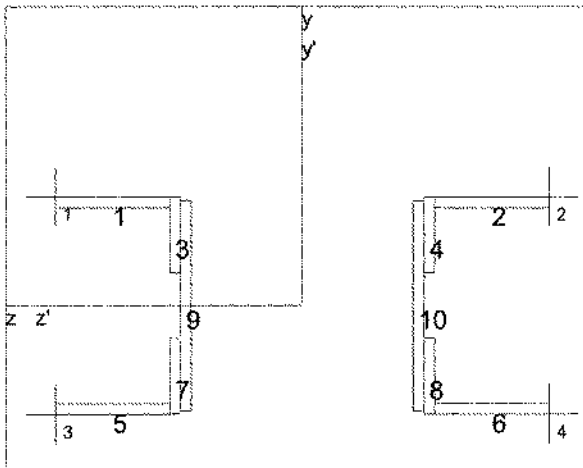

Section Number: 57

Section Type: CUSTOM
Section Name: Vert_57.uns
UNS File Path:
SEC File Name:
SEC File Path: x:\S1968\Calcs\LAS

Program SECGEN
Version 6. 0. Run on 10-29-2012

Property	Value
Area	61.50
Ay	37.50
Az	24.00
Iyo	7019.66
Izo	2011.06
Iyzo	0.00
2 A Cell	0.00
Ix	11.53
Iy	7019.66
Iz	2011.06
ry	10.68
rz	5.72
y' to cg	0.00
z' to cg	0.00
Beta rot	0.00 degrees

Plate	Ly'	Lz'	L	t	y'	z'	Ty	Tz
1	0.00	8.00	8.00	0.750	7.13	13.25	0.00	0.75
2	0.00	8.00	8.00	0.750	7.13	-13.25	0.00	0.75
3	5.25	0.00	5.25	0.750	4.88	8.88	0.75	0.00
4	5.25	0.00	5.25	0.750	4.88	-8.88	0.75	0.00
5	0.00	8.00	8.00	0.750	-7.13	13.25	0.00	0.75
6	0.00	8.00	8.00	0.750	-7.13	-13.25	0.00	0.75
7	5.25	0.00	5.25	0.750	-4.88	8.88	0.75	0.00
8	5.25	0.00	5.25	0.750	-4.88	-8.88	0.75	0.00
9	14.50	0.00	14.50	0.750	0.00	8.13	0.75	0.00
10	14.50	0.00	14.50	0.750	0.00	-8.13	0.75	0.00

Pt.	y'	z'	yo	zo	Syo	Szo	y	z	Sy	Sz
1	7.50	17.25	7.50	17.25	406.9	-268.1	7.50	17.25	406.9	-268.1
2	7.50	-17.25	7.50	-17.25	-406.9	-268.1	7.50	-17.25	-406.9	-268.1
3	-7.50	17.25	-7.50	17.25	406.9	268.1	-7.50	17.25	406.9	268.1
4	-7.50	-17.25	-7.50	-17.25	-406.9	268.1	-7.50	-17.25	-406.9	268.1

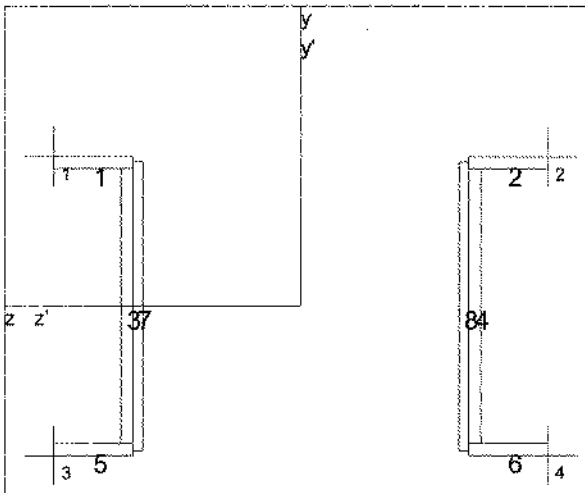

Section Number: 58

Section Type: CUSTOM
Section Name: Vert_58.uns
UNS File Path:
SEC File Name:
SEC File Path: x:\S1968\Calcs\LAS

Program SECGEN
Version 6. 0, Run on 10-29-2012

Property	Value
Area	40.66
Ay	31.06
Az	9.60
Iyo	3341.31
Izo	1014.81
Iyzo	0.00
2 A Cell	0.00
Ix	4.35
Iy	3341.31
Iz	1014.81
ry	9.07
rz	5.00
y' to cg	0.00
z' to cg	0.00
Beta rot	0.00 degrees

Plate	Ly'	Lz'	L	t	y'	z'	Ty	Tz
1	0.00	4.00	4.00	0.600	7.20	10.50	0.00	0.60
2	0.00	4.00	4.00	0.600	7.20	-10.50	0.00	0.60
3	13.80	0.00	13.80	0.600	0.00	8.80	0.60	0.00
4	13.80	0.00	13.80	0.600	0.00	-8.80	0.60	0.00
5	0.00	4.00	4.00	0.600	-7.20	10.50	0.00	0.60
6	0.00	4.00	4.00	0.600	-7.20	-10.50	0.00	0.60
7	14.50	0.00	14.50	0.500	0.00	8.25	0.50	0.00
8	14.50	0.00	14.50	0.500	0.00	-8.25	0.50	0.00

Pt.	y'	z'	yo	zo	Syo	Szo	y	z	Sy	Sz
1	7.50	12.50	7.50	12.50	267.3	-135.3	7.50	12.50	267.3	-135.3
2	7.50	-12.50	7.50	-12.50	-267.3	-135.3	7.50	-12.50	-267.3	-135.3
3	-7.50	12.50	-7.50	12.50	267.3	135.3	-7.50	12.50	267.3	135.3
4	-7.50	-12.50	-7.50	-12.50	-267.3	135.3	-7.50	-12.50	-267.3	135.3

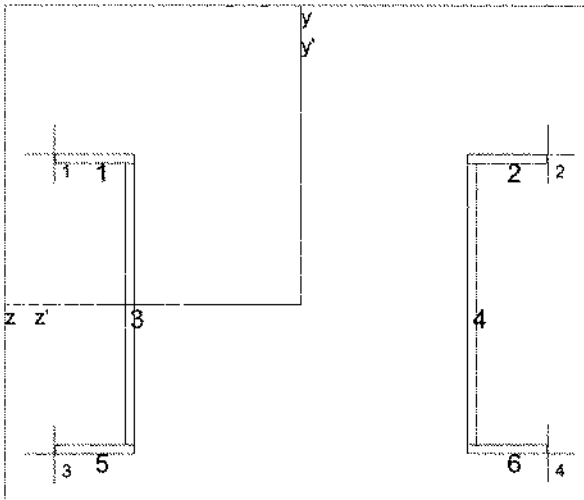

Section Number: 59

Section Type: CUSTOM
Section Name: Vert_59.uns
UNS File Path:
SEC File Name:
SEC File Path: x:\S1968\Calcs\LAS

Program SECGEN
Version 6. 0, Run on 10-29-2012

Property	Value
Area	19.89
Ay	12.69
Az	7.20
Iyo	1746.44
Izo	591.43
Iyzo	0.00
2 A Cell	0.00
Ix	1.34
Iy	1746.44
Iz	591.43
ry	9.37
rz	5.45
y' to cg	0.00
z' to cg	0.00
Beta rot	0.00 degrees

Plate	Ly'	Lz'	L	t	y'	z'	Ty	Tz
1	0.00	4.00	4.00	0.450	7.28	10.44	0.00	0.45
2	0.00	4.00	4.00	0.450	7.28	-10.44	0.00	0.45
3	14.10	0.00	14.10	0.450	0.00	8.66	0.45	0.00
4	14.10	0.00	14.10	0.450	0.00	-8.66	0.45	0.00
5	0.00	4.00	4.00	0.450	-7.28	10.44	0.00	0.45
6	0.00	4.00	4.00	0.450	-7.28	-10.44	0.00	0.45

Pt.	y'	z'	yo	zo	Syo	Szo	y	z	Sy	Sz
1	7.50	12.50	7.50	12.50	139.7	-78.9	7.50	12.50	139.7	-78.9
2	7.50	-12.50	7.50	-12.50	-139.7	-78.9	7.50	-12.50	-139.7	-78.9
3	-7.50	12.50	-7.50	12.50	139.7	78.9	-7.50	12.50	139.7	78.9
4	-7.50	-12.50	-7.50	-12.50	-139.7	78.9	-7.50	-12.50	-139.7	78.9

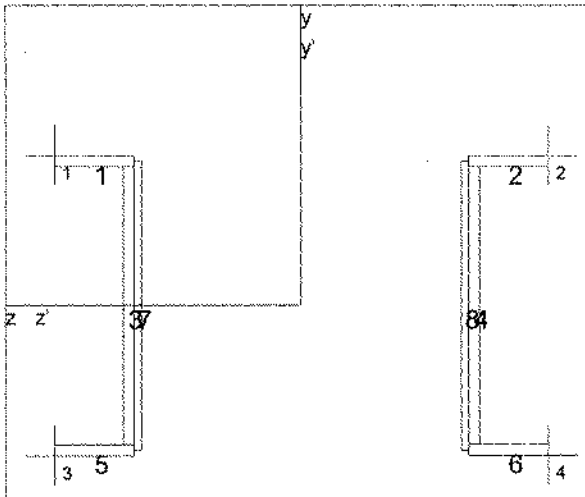

Section Number: 60

Section Type: CUSTOM
Section Name: Vert_60.uns
UNS File Path:
SEC File Name:
SEC File Path: x:\S1968\Calcs\LAS

Program SECGEN
Version 6. 0, Run on 11-07-2012

Property	Value
Area	34.55
Ay	25.91
Az	8.64
Iyo	2833.30
Izo	885.14
Iyzo	0.00
2 A Cell	0.00
Ix	2.81
Iy	2833.30
Iz	885.14
ry	9.06
rz	5.06
y' to cg	0.00
z' to cg	0.00
Beta rot	0.00 degrees

Plate	Ly'	Lz'	L	t	y'	z'	Ty	Tz
1	0.00	4.00	4.00	0.540	7.23	10.44	0.00	0.54
2	0.00	4.00	4.00	0.540	7.23	-10.44	0.00	0.54
3	13.92	0.00	13.92	0.540	0.00	8.71	0.54	0.00
4	13.92	0.00	13.92	0.540	0.00	-8.71	0.54	0.00
5	0.00	4.00	4.00	0.540	-7.23	10.44	0.00	0.54
6	0.00	4.00	4.00	0.540	-7.23	-10.44	0.00	0.54
7	14.50	0.00	14.50	0.375	0.00	8.25	0.38	0.00
8	14.50	0.00	14.50	0.375	0.00	-8.25	0.38	0.00

Pt.	y'	z'	yo	zo	Syo	Szo	y	z	Sy	Sz
1	7.50	12.44	7.50	12.44	227.8	-118.0	7.50	12.44	227.8	-118.0
2	7.50	-12.44	7.50	-12.44	-227.8	-118.0	7.50	-12.44	-227.8	-118.0
3	-7.50	12.44	-7.50	12.44	227.8	118.0	-7.50	12.44	227.8	118.0
4	-7.50	-12.44	-7.50	-12.44	-227.8	118.0	-7.50	-12.44	-227.8	118.0

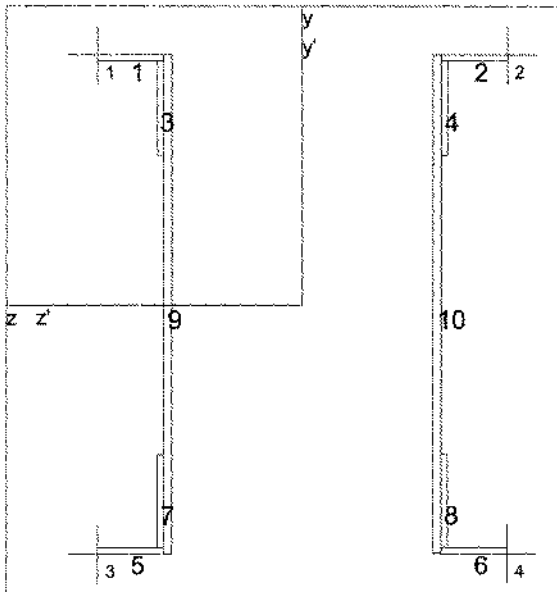

Section Number: 37

Section Type: CUSTOM
Section Name: Vert_37.uns
UNS File Path:
SEC File Name:
SEC File Path: x:\S1968\Calcs\LAS

Program SECGEN
Version 6. 0, Run on 10-29-2012

Property	Value
Area	44.44
Ay	38.44
Az	6.00
Iyo	3301.10
Izo	4766.11
Iyzo	0.00
2 A Cell	0.00
Ix	3.18
Iy	3301.10
Iz	4766.11
ry	8.62
rz	10.36
y' to cg	0.00
z' to cg	0.00
Beta rot	0.00 degrees

Plate	Ly'	Lz'	L	t	y'	z'	Ty	Tz
1	0.00	4.00	4.00	0.375	14.81	10.44	0.00	0.38
2	0.00	4.00	4.00	0.375	14.81	-10.44	0.00	0.38
3	5.63	0.00	5.63	0.375	11.81	8.63	0.38	0.00
4	5.63	0.00	5.63	0.375	11.81	-8.63	0.38	0.00
5	0.00	4.00	4.00	0.375	-14.81	10.44	0.00	0.38
6	0.00	4.00	4.00	0.375	-14.81	-10.44	0.00	0.38
7	5.63	0.00	5.63	0.375	-11.81	8.63	0.38	0.00
8	5.63	0.00	5.63	0.375	-11.81	-8.63	0.38	0.00
9	30.00	0.00	30.00	0.500	0.00	8.19	0.50	0.00
10	30.00	0.00	30.00	0.500	0.00	-8.19	0.50	0.00

Pt.	y'	z'	yo	zo	Syo	Szo	y	z	Sy	Sz
1	15.00	12.44	15.00	12.44	265.4	-317.7	15.00	12.44	265.4	-317.7
2	15.00	-12.44	15.00	-12.44	-265.4	-317.7	15.00	-12.44	-265.4	-317.7
3	-15.00	12.44	-15.00	12.44	265.4	317.7	-15.00	12.44	265.4	317.7
4	-15.00	-12.44	-15.00	-12.44	-265.4	317.7	-15.00	-12.44	-265.4	317.7

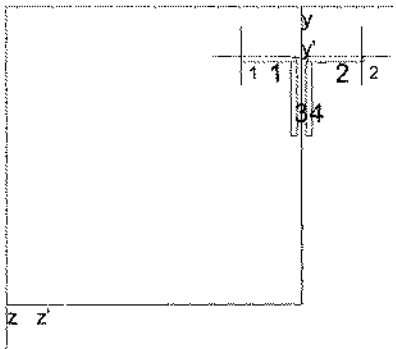

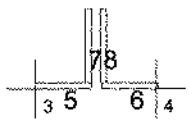

Section Number: 30

Section Type: CUSTOM
Section Name: Vert_30.uns
UNS File Path:
SEC File Name:
SEC File Path: x:\S1968\Calcs\LAS

Program SECGEN
Version 6. 0, Run on 11-07-2012

Property	Value
Area	12.19
Ay	6.94
Az	5.25
Iyo	29.71
Izo	2361.16
Iyzo	0.00
2 A Cell	0.00
Ix	0.57
Iy	29.71
Iz	2361.16
ry	1.56
rz	13.92
y' to cg	0.00
z' to cg	-0.02
Beta rot	0.00 degrees

Plate	Ly'	Lz'	L	t	y'	z'	Ty	Tz
1	0.00	3.50	3.50	0.375	15.25	2.03	0.00	0.38
2	0.00	3.50	3.50	0.375	15.25	-2.13	0.00	0.38
3	4.63	0.00	4.63	0.375	12.75	0.47	0.38	0.00
4	4.63	0.00	4.63	0.375	12.75	-0.47	0.38	0.00
5	0.00	3.50	3.50	0.375	-15.25	2.03	0.00	0.38
6	0.00	3.50	3.50	0.375	-15.25	-2.13	0.00	0.38
7	4.63	0.00	4.63	0.375	-12.75	0.47	0.38	0.00
8	4.63	0.00	4.63	0.375	-12.75	-0.47	0.38	0.00

Pt.	y'	z'	yo	zo	Syo	Szo	y	z	Sy	Sz
1	15.44	3.78	15.44	3.80	7.8	-152.9	15.44	3.80	7.8	-152.9
2	15.44	-3.78	15.44	-3.76	-7.9	-152.9	15.44	-3.76	-7.9	-152.9
3	-15.44	3.78	-15.44	3.80	7.8	152.9	-15.44	3.80	7.8	152.9
4	-15.44	-3.78	-15.44	-3.76	-7.9	152.9	-15.44	-3.76	-7.9	152.9

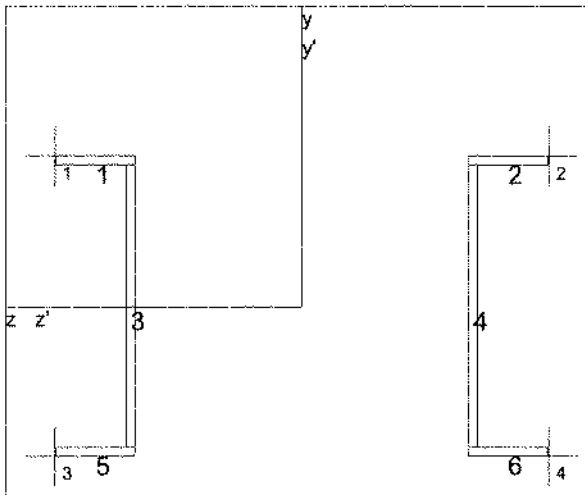

Section Number: 61

Section Type: CUSTOM
Section Name: Vert_61.uns
UNS File Path:
SEC File Name:
SEC File Path: x:\S1968\Calcs\LAS

Program SECGEN
Version 6. 0, Run on 10-29-2012

Property	Value
Area	19.89
Ay	12.69
Az	7.20
Iyo	1746.44
Izo	591.43
Iyzo	0.00
2 A Cell	0.00
Ix	1.34
Iy	1746.44
Iz	591.43
ry	9.37
rz	5.45
y' to cg	0.00
z' to cg	0.00
Beta rot	0.00 degrees

Plate	Ly'	Lz'	L	t	y'	z'	Ty	Tz
1	0.00	4.00	4.00	0.450	7.28	10.44	0.00	0.45
2	0.00	4.00	4.00	0.450	7.28	-10.44	0.00	0.45
3	14.10	0.00	14.10	0.450	0.00	8.66	0.45	0.00
4	14.10	0.00	14.10	0.450	0.00	-8.66	0.45	0.00
5	0.00	4.00	4.00	0.450	-7.28	10.44	0.00	0.45
6	0.00	4.00	4.00	0.450	-7.28	-10.44	0.00	0.45

Pt.	y'	z'	yo	zo	Syo	Szo	y	z	Sy	Sz
1	7.50	12.50	7.50	12.50	139.7	-78.9	7.50	12.50	139.7	-78.9
2	7.50	-12.50	7.50	-12.50	-139.7	-78.9	7.50	-12.50	-139.7	-78.9
3	-7.50	12.50	-7.50	12.50	139.7	78.9	-7.50	12.50	139.7	78.9
4	-7.50	-12.50	-7.50	-12.50	-139.7	78.9	-7.50	-12.50	-139.7	78.9

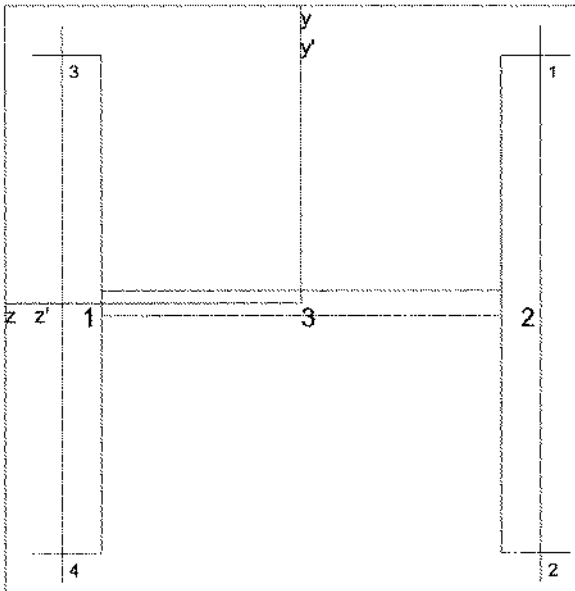

Section Number: 74

Section Type: ZI
Section Name: 14_CB_167
SEC File Name:
SEC File Path: x:\S1968\Calcs\LAS

Program SECGEN
Version 6. 0, Run on 11-07-2012

Property	Value
Area	48.79
Ay	38.94
Az	9.85
Iyo	2009.34
Izo	790.15
Iyzo	0.00
2 A Cell	0.00
Ix	22.21
Iy	2009.34
Iz	790.15
ry	6.42
rz	4.02
y' to cg	0.00
z' to cg	0.00
Beta rot	0.00 degrees

Plate	Ly'	Lz'	L	t	y'	z'	Ty	Tz
1	15.60	0.00	15.60	1.248	0.00	6.94	1.25	0.00
2	15.60	0.00	15.60	1.248	0.00	-6.94	1.25	0.00
3	0.00	12.63	12.63	0.780	0.00	0.00	0.00	0.78

Pt.	y'	z'	yo	zo	Syo	Szo	y	z	Sy	Sz
1	7.80	-7.56	7.80	-7.56	-265.8	-101.3	7.80	-7.56	-265.8	-101.3
2	-7.80	-7.56	-7.80	-7.56	-265.8	101.3	-7.80	-7.56	-265.8	101.3
3	7.80	7.56	7.80	7.56	265.8	-101.3	7.80	7.56	265.8	-101.3
4	-7.80	7.56	-7.80	7.56	265.8	101.3	-7.80	7.56	265.8	101.3

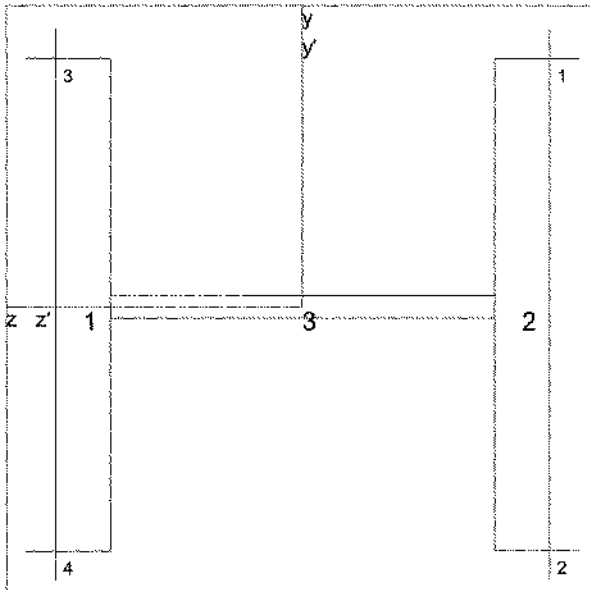

Section Number: 75

Section Type: ZI
Section Name: 14_CB_158_2PLS_16X5/8
SEC File Name:
SEC File Path: x:\S1968\Calcs\LAS

Program SECGEN
Version 6. 0, Run on 10-29-2012

Property	Value
Area	66.81
Ay	57.60
Az	9.21
Iyo	3132.11
Izo	1229.21
Iyzo	0.00
2 A Cell	0.00
Ix	63.84
Iy	3132.11
Iz	1229.21
rY	6.85
rz	4.29
y' to cg	0.00
z' to cg	0.00
Beta rot	0.00 degrees

Plate	Ly'	Lz'	L	t	y'	z'	Ty	Tz
1	16.00	0.00	16.00	1.800	0.00	7.21	1.80	0.00
2	16.00	0.00	16.00	1.800	0.00	-7.21	1.80	0.00
3	0.00	12.62	12.62	0.730	0.00	0.00	0.00	0.73

Pt.	y'	z'	yo	zo	Syo	Szo	y	z	Sy	Sz
1	8.00	-8.11	8.00	-8.11	-386.2	-153.7	8.00	-8.11	-386.2	-153.7
2	-8.00	-8.11	-8.00	-8.11	-386.2	153.7	-8.00	-8.11	-386.2	153.7
3	8.00	8.11	8.00	8.11	386.2	-153.7	8.00	8.11	386.2	-153.7
4	-8.00	8.11	-8.00	8.11	386.2	153.7	-8.00	8.11	386.2	153.7

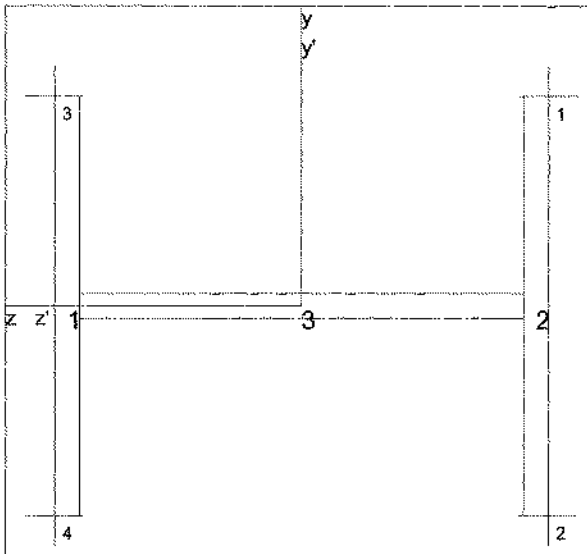

Section Number: 80

Section Type: ZI
Section Name: 14_CB_111_10_0.5
SEC File Name:
SEC File Path: x:\S1968\Calcs\LAS

Program SECGEN
Version 6. 0, Run on 10-29-2012

Property	Value
Area	38.98 ← CLOSE OK.
Ay	25.55
Az	13.43
Iyo	2012.70
Izo	454.68
Iyzo	0.00
2 A Cell	0.00
Ix	9.83
Iy	2012.70
Iz	454.68
ry	7.19
rz	3.42
y' to cg	0.00
z' to cg	0.00
Beta rot	0.00 degrees

Plate	Ly'	Lz'	L	t	y'	z'	Ty	Tz
1	14.60	0.00	14.60	0.875	0.00	8.25	0.88	0.00
2	14.60	0.00	14.60	0.875	0.00	-8.25	0.88	0.00
3	0.00	15.62	15.62	0.860	0.00	0.00	0.00	0.86

Pt.	y'	z'	yo	zo	Syo	Szo	y	z	Sy	Sz
1	7.30	-8.69	7.30	-8.69	-231.7	-62.3	7.30	-8.69	-231.7	-62.3
2	-7.30	-8.69	-7.30	-8.69	-231.7	62.3	-7.30	-8.69	-231.7	62.3
3	7.30	8.69	7.30	8.69	231.7	-62.3	7.30	8.69	231.7	-62.3
4	-7.30	8.69	-7.30	8.69	231.7	62.3	-7.30	8.69	231.7	62.3

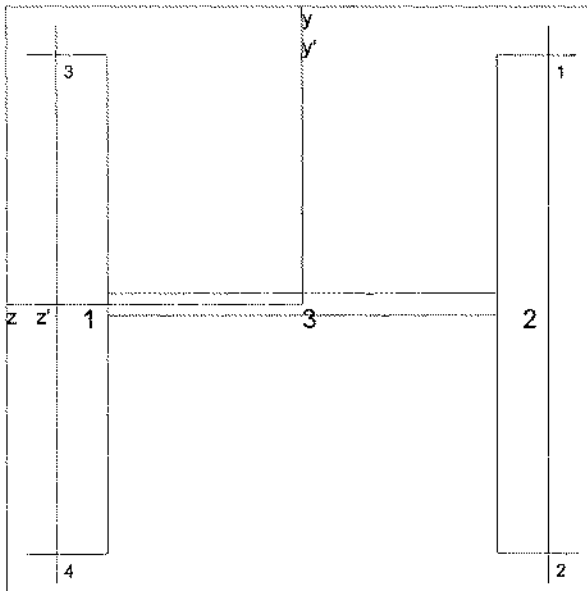

Section Number: 84

Section Type: ZI
Section Name: 14_CB_150_2PLS_16X9/16
SEC File Name:
SEC File Path: x:\S1968\Calcs\LAS

Program SECGEN
Version 6.0, Run on 10-29-2012

Property	Value
Area	62.21
Ay	53.44
Az	8.77
Iyo	2856.99
Izo	1140.41
Iyzo	0.00
2 A Cell	0.00
Ix	51.09
Iy	2856.99
Iz	1140.41
ry	6.78
rz	4.28
y' to cg	0.00
z' to cg	0.00
Beta rot	0.00 degrees

Plate	Ly'	Lz'	L	t	y'	z'	Ty	Tz
1	16.00	0.00	16.00	1.670	0.00	7.15	1.67	0.00
2	16.00	0.00	16.00	1.670	0.00	-7.15	1.67	0.00
3	0.00	12.62	12.62	0.695	0.00	0.00	0.00	0.70

Pt.	y'	z'	yo	zo	Syo	Szo	y	z	Sy	Sz
1	8.00	-7.98	8.00	-7.98	-358.0	-142.6	8.00	-7.98	-358.0	-142.6
2	-8.00	-7.98	-8.00	-7.98	-358.0	142.6	-8.00	-7.98	-358.0	142.6
3	8.00	7.98	8.00	7.98	358.0	-142.6	8.00	7.98	358.0	-142.6
4	-8.00	7.98	-8.00	7.98	358.0	142.6	-8.00	7.98	358.0	142.6

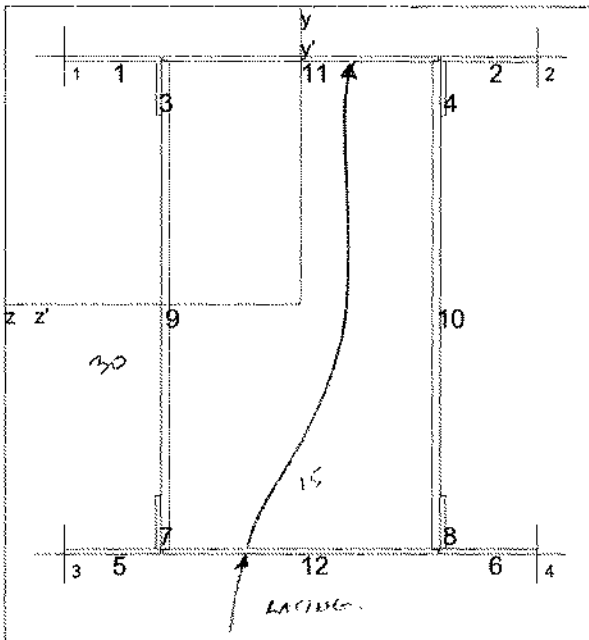

ADDED TO SEC 10 TO COMPUTE I_x

Section Number: 100

Section Type: CUSTOM
Section Name: Section_100.uns
UNS File Path:
SEC File Name:
SEC File Path: x:\S1968\Calcs\LAS

THIS SECTION IS USED FOR COMPUTING I_x FOR CHORD SECTIONS.

Program SECGEN
Version 6. 0, Run on 10-31-2012

Property	Value
Area	52.30
Ay	34.18
Az	18.13
Iyo	3719.12
Izo	7118.98
Iyzo	0.00
2 A Cell	1011.30
Ix	4486.57
Iy	3719.12
Iz	7118.98
ry	8.43
rz	11.67
y' to cg	0.00
z' to cg	0.00
Beta rot	0.00 degrees

USE I_x = 5000 FOR ALL BOOM CHORD SECTIONS

Plate	Ly'	Lz'	L	t	y'	z'	Ty	Tz
1	0.00	6.00	6.00	0.313	15.09	11.63	0.00	0.31
2	0.00	6.00	6.00	0.313	15.09	-11.63	0.00	0.31
3	3.34	0.00	3.34	0.313	13.27	8.78	0.31	0.00
4	3.34	0.00	3.34	0.313	13.27	-8.78	0.31	0.00
5	0.00	6.00	6.00	0.313	-15.09	11.63	0.00	0.31
6	0.00	6.00	6.00	0.313	-15.09	-11.63	0.00	0.31
7	3.34	0.00	3.34	0.313	-13.27	8.78	0.31	0.00
8	3.34	0.00	3.34	0.313	-13.27	-8.78	0.31	0.00
9	30.00	0.00	30.00	0.500	0.00	8.38	0.50	0.00
10	30.00	0.00	30.00	0.500	0.00	-8.38	0.50	0.00
11	0.00	17.00	17.00	0.313	15.09	0.00	0.00	0.31
12	0.00	17.00	17.00	0.313	-15.09	0.00	0.00	0.31

Pt.	y'	z'	yo	zo	Syo	Szo	y	z	Sy	Sz
1	15.25	14.63	15.25	14.63	254.3	-466.8	15.25	14.63	254.3	-466.8
2	15.25	-14.63	15.25	-14.63	-254.3	-466.8	15.25	-14.63	-254.3	-466.8
3	-15.25	14.63	-15.25	14.63	254.3	466.8	-15.25	14.63	254.3	466.8
4	-15.25	-14.63	-15.25	-14.63	-254.3	466.8	-15.25	-14.63	-254.3	466.8

MANUALLY ENTERED. **SECTION PROPERTIES**

LAS Sec No.	DESCRIPTION	AREA	AXIS 1 - 1			AXIS 2 - 2		
			I	S	r	I	S	r
		Sq.In.	In.^{4}	In.3	In.	In.^{4}	In.3	In.
76	14 CB142	41.73	1667.8	226.2	6.32	658.9	85	3.97
78	14 CB 87	25.56	966.9	138.1	6.15	349.7	48.2	3.70
79	14 CB 61	17.94	641.5	92.2	5.98	107.3	21.5	2.45
81	14 CB 53	15.59	542.1	77.8	5.90	57.5	14.3	1.92
82	14 CB 43	12.65	429.0	62.7	5.82	45.1	11.3	1.89
83	14 CB 43	12.65	429.0	62.7	5.82	45.1	11.3	1.89
85	14 CB 68	20.00	724.1	103.0	6.02	121.2	24.1	2.46
90	14 CB 30	8.81	289.6	41.8	5.73	17.5	5.2	1.41
91	14 CB 202	59.38	2538.1	324.8	6.54	979.8	124.4	4.06
92	14 CB 255	74.99	3280.0	405.1	6.61	1247.0	158.0	4.08

Data from AISC Iron and Steel Beams 1873-1952

14 CB 142

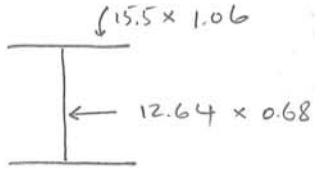

#76.

$$I_x = \frac{1}{3}\left[15.5 \times 1.06^3 \times 2 + 12.64 \times 0.68^3\right] = 13.6 \text{ in}^3$$

14CB 87

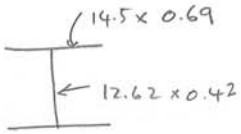

#78

$$I_x = 3.5 \text{ in}^4$$

---

14 CB 61

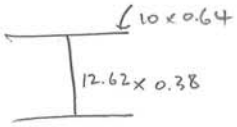

#79

$$I_x = 2.0$$

14CB 53

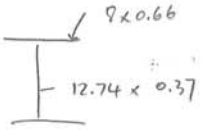

81

$$I_x = 1.7$$

14CB 43 USED $I_x = 1.5$ #82

14 CB 202

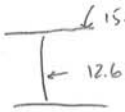

$I_x = 38.7$ # 91

CB14255

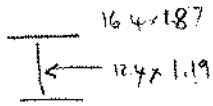

$I_x = 78.5$ # 92

Purpose

The purpose of this calculation is to determine the section properties for a beam element representing the tower structure for use in the boom analysis.

Calculation Approach:

Displacements and rotations at the top center of the tower were calculated for parameter loads (Py, Px, My, and Mz) applied in the tower FEA. The tower member section properties were calculated based on these parameter loads and the calculated displacements and rotations. Refer to the next three pages.

The section properties are consistent with the tower beam element local coordinate system, which matches the boom global coordinate system. Refer to Section 4.1.2 – Model Overview for additional information.

Section Properties For Tower Member In Boom Model

L =	1,518.5 in
A =	606 in^2
Ay =	53.5 in^2
Az =	53.5 in^2
Ix =	11.2 x 10^6 in^4
Iy =	36.4 x 10^6 in^4
Iz =	36.4 x 10^6 in^4

TOWER STIFFNESS

AXIAL

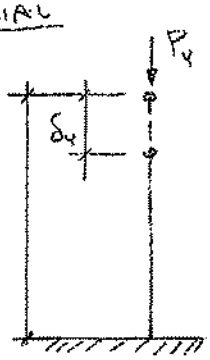

$L = 126'\text{-}6\tfrac{1}{2}''$

$P_Y = 10{,}000^K$

$\delta_Y = 0.847''$

PROVIDED BY STV.
REFER TO STV EMAIL DATED
11/21/12 BY NEIL HANER

BENDING

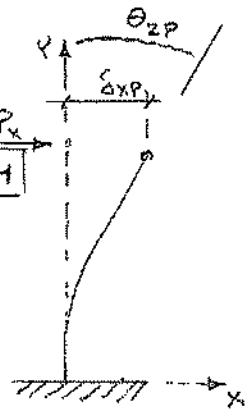

$P_X = 1{,}000^K$

$\delta_{XP} = 3.479''$

$\theta_{ZP} = -1.07\times10^{-3}$

TORSION

PLAN

$M_Y = 10{,}000$ FE-K

$\theta_Y = 1.38\times10^{-3}$

PROVIDED BY STV

TOWER STIFFNESS

ROTATION

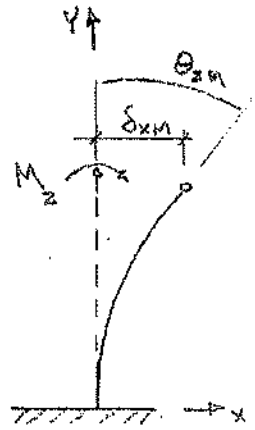

M_z = 10,000 FT-K

δ_{xM} = 0.128"

θ_{zM} = 1.535×10^{-4}

PROVIDED BY STV.
REFER TO STV EMAIL DATED 11/21/12 BY NEIL HANER

NOTE: X AXIS IN N-S DIRECTION.
Y AXIS VERTICAL
Z AXIS IN E-W DIRECTION

θ IN RADIANS

TOWER PROPERTIES

Ref. STV Email. 11-21-12

From: N.C Hance To D. Lind

AXIAL

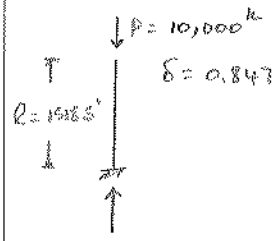

$$A = \frac{Pl}{\delta E} = \frac{10{,}000^{k} \times 1518.5''}{0.847 \times 29{,}600} = 606 \text{ in}^2$$

(Avg: $96 \times 8 = 768 \text{ in}^2$) ✓.

Flexure

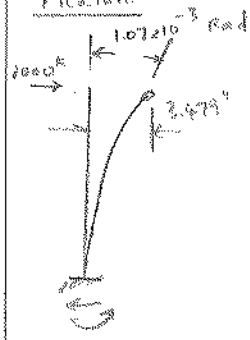

$$\theta = \frac{Pl^2}{2EI} \Rightarrow I = \frac{Pl^2}{2E\theta} = \frac{1000^{k} \times 1518.5^{2} \text{ in}^2}{2 \times 29{,}600 \times 1.07\times10^{-3} \frac{k}{in^2}} = 36.4\times10^{6} \text{ in}^4$$

$$\frac{Pl^3}{3EI} = \frac{1000 \times 1518.5^3}{3 \times 29{,}600 \times 36.4\times10^6} = 1.08''.$$

Deflection due to shear $= 3.479 - 1.08 = 2.4'' = \delta_v$

$$\delta_v = \frac{Pl}{A_v G} \Rightarrow A_v = \frac{Pl}{\delta_v \times 0.4E} = \frac{1000 \times 1518.5}{2.4 \times 0.4 \times 29{,}600}$$

$$= 53.5 \text{ in}^2.$$

TORSION

$T = 10{,}000 \text{ k}'$

$\theta = 1.38\times10^{-3}$ Rad

$$\theta = \frac{Tl}{GJ} \Rightarrow J = \frac{Tl}{\theta G} = \frac{10{,}000 \times 12^{k''} \times 1518.5''}{1.38\times10^{-3} \times 0.4 \times 29{,}600 \ k/in^2} = 11.2\times10^{6} \text{ in}^4$$

FROM ROTATION.

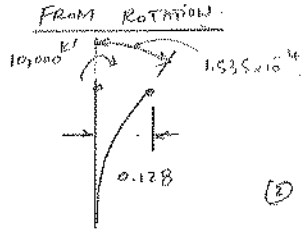

① Rotation: $1 \times \theta = \frac{Ml}{EI} \Rightarrow I = \frac{Ml}{E\theta} = \frac{10{,}000 \times 12^{k''} \times 1518.5''}{29{,}600 \times 1.535\times10^{-4} \ k/in^2}$

$$= 40.1\times10^{6} \text{ in}^4$$

② Deflection: $1 \times \delta = \frac{Ml^2}{2EI} \Rightarrow I = \frac{Ml^2}{2E\delta} = \frac{10{,}000 \times 12 \times 1518.5^2}{2 \times 29{,}600 \times 0.128} = 36.5\times10^{6} \text{ in}^4$

✓

```
1   A=500 IX=100000 IY=100000  IZ=100000 T=ASYM NPTS=1 \
     SYY=10000  SZZ=10000        NM=ARTIFICIAL_SECTION_SP
7   A=1 IX=100000 IY=100000  IZ=100000 T=ASYM NPTS=1 \
     SYY=1000000  SZZ=1000000        NM=ARTIFICIAL_SECTION_SP
5   A=606, 53, 53 IX=11200000 IY=36400000  IZ=36400000 T=ASYM NPTS=1 \
     SYY=1000000  SZZ=1000000        NM=ARTIFICIAL_SECTION_SP
10 A=41.68 AYN=34.18 AZN=7.50 2A=0.00  \
     IX=2.88 IY=3463.24 IZ=4698.21 \
     NPTS=4 \
     SYY= 236.80 -236.80 236.80 -236.80 \
     SZZ= -308.08 -308.08 308.08 308.08 \
     T=ASYM LPY=16.00 LPZ=15.96 NM=LowerCh_10.uns
11 A=83.61 AYN=67.11 AZN=16.50 2A=0.00  \
     IX=18.30 IY=6977.81 IZ=9709.55 \
     NPTS=4 \
     SYY= 477.12 -477.12 477.12 -477.12 \
     SZZ= -636.69 -636.69 636.69 636.69 \
     T=ASYM LPY=16.00 LPZ=15.96 NM=LowerCh_11.uns
13 A=126.42 AYN=109.92 AZN=16.50 2A=0.00  \
     IX=42.18 IY=10275.41 IZ=11729.89 \
     NPTS=4 \
     SYY= 696.64 -696.64 696.64 -696.64 \
     SZZ= -769.17 -769.17 769.17 769.17 \
     T=ASYM LPY=16.00 LPZ=15.96 NM=LowerCh_13.uns
14 A=65.94 AYN=50.94 AZN=15.00 2A=0.00  \
     IX=8.59 IY=5738.30 IZ=8082.98 \
     NPTS=4 \
     SYY= 392.36 -392.36 392.36 -392.36 \
     SZZ= -530.03 -530.03 530.03 530.03 \
     T=ASYM LPY=16.00 LPZ=15.96 NM=LowerCh_14.uns
15 A=41.68 AYN=34.18 AZN=7.50 2A=0.00  \
     IX=2.88 IY=3463.24 IZ=4698.21 \
     NPTS=4 \
     SYY= 236.80 -236.80 236.80 -236.80 \
     SZZ= -308.08 -308.08 308.08 308.08 \
     T=ASYM LPY=16.00 LPZ=15.96 NM=LowerCh_15.uns
16 A=8.36 AYN=3.98 AZN=4.38 2A=0.00  \
     IX=0.27 IY=704.38 IZ=1709.58 \
     NPTS=4 \
     SYY= 60.59 -60.59 60.59 -60.59 \
     SZZ= -112.10 -112.10 112.10 112.10 \
     T=ASYM LPY=16.00 LPZ=15.96 NM=LowerCh_16.uns
20 A=44.81 AYN=27.94 AZN=16.88 2A=0.00  \
     IX=2.10 IY=3397.06 IZ=5945.47 \
     NPTS=4 \
     SYY= 234.28 -234.28 271.77 -271.77 \
     SZZ= -500.52 -500.52 312.98 312.98 \
     T=ASYM LPY=16.00 LPZ=15.96 NM=UpperCh_20.uns
21 A=71.13 AYN=52.25 AZN=18.88 2A=0.00  \
     IX=8.59 IY=5572.43 IZ=8701.20 \
     NPTS=4 \
     SYY= 384.31 -384.30 445.84 -445.75 \
     SZZ= -656.00 -655.94 494.08 494.11 \
     T=ASYM LPY=16.00 LPZ=15.96 NM=UpperCh_21.uns
22 A=109.13 AYN=87.00 AZN=22.13 2A=0.00  \
     IX=19.04 IY=8899.23 IZ=11147.03 \
     NPTS=4 \
     SYY= 659.20 -659.20 691.20 -691.20 \
     SZZ= -785.41 -785.41 668.19 668.19 \
     T=ASYM LPY=16.00 LPZ=15.96 NM=UpperCh_22.uns
23 A=94.44 AYN=72.31 AZN=22.13 2A=0.00  \
     IX=13.15 IY=7589.57 IZ=10551.83 \
     NPTS=4 \
     SYY= 562.19 -562.19 589.48 -589.48 \
     SZZ= -755.33 -755.33 624.18 624.18 \
     T=ASYM LPY=16.00 LPZ=15.96 NM=UpperCh_23.uns
24 A=67.84 AYN=51.09 AZN=16.75 2A=0.00  \
     IX=8.03 IY=5140.11 IZ=8130.04 \
     NPTS=4 \
     SYY= 395.39 -395.39 411.21 -411.21 \
     SZZ= -606.43 -606.43 465.41 465.41 \
     T=ASYM LPY=16.00 LPZ=15.96 NM=UpperCh_24.uns
25 A=43.69 AYN=27.94 AZN=15.75 2A=0.00  \
     IX=2.05 IY=3184.16 IZ=5787.72 \
     NPTS=4 \
     SYY= 244.94 -244.94 254.73 -254.73 \
```

← Artificial - Rigid.

PROPS.DAT FILE

← Artificial tower member based on Tower FEA

LOWER CHORDS

UPPER CHORDS

```
     SZZ= -475.19 -475.19 309.58 309.58 \
     T=ASYM LPY=16.00 LPZ=15.96 NM=UpperCh_25.uns
30 A=12.19 AYN=6.94 AZN=5.25 2A=0.00  \
     IX=0.57 IY=29.71 IZ=2361.16 \
     NPTS=4 \
     SYY= 7.81 -7.90 7.81 -7.90 \
     SZZ= -152.95 -152.95 152.95 152.95 \
     T=ASYM LPY=16.00 LPZ=15.96 NM=Vert_30.uns
31 A=44.44 AYN=38.44 AZN=6.00 2A=0.00  \
     IX=3.18 IY=3301.10 IZ=4766.11 \
     NPTS=4 \
     SYY= 265.41 -265.41 265.41 -265.41 \
     SZZ= -317.74 -317.74 317.74 317.74 \
     T=ASYM LPY=14.60 LPZ=17.37 NM=Vert_37.uns
32 A=44.44 AYN=38.44 AZN=6.00 2A=0.00  \
     IX=3.18 IY=3301.10 IZ=4766.11 \
     NPTS=4 \
     SYY= 265.41 -265.41 265.41 -265.41 \
     SZZ= -317.74 -317.74 317.74 317.74 \
     T=ASYM LPY=14.60 LPZ=17.37 NM=Vert_37.uns
33 A=44.44 AYN=38.44 AZN=6.00 2A=0.00  \
     IX=3.18 IY=3301.10 IZ=4766.11 \
     NPTS=4 \
     SYY= 265.41 -265.41 265.41 -265.41 \
     SZZ= -317.74 -317.74 317.74 317.74 \
     T=ASYM LPY=14.60 LPZ=17.37 NM=Vert_37.uns
34 A=44.44 AYN=38.44 AZN=6.00 2A=0.00  \
     IX=3.18 IY=3301.10 IZ=4766.11 \
     NPTS=4 \
     SYY= 265.41 -265.41 265.41 -265.41 \
     SZZ= -317.74 -317.74 317.74 317.74 \
     T=ASYM LPY=14.60 LPZ=17.37 NM=Vert_37.uns
35 A=44.44 AYN=38.44 AZN=6.00 2A=0.00  \
     IX=3.18 IY=3301.10 IZ=4766.11 \
     NPTS=4 \
     SYY= 265.41 -265.41 265.41 -265.41 \
     SZZ= -317.74 -317.74 317.74 317.74 \
     T=ASYM LPY=14.60 LPZ=17.37 NM=Vert_37.uns
36 A=44.44 AYN=38.44 AZN=6.00 2A=0.00  \
     IX=3.18 IY=3301.10 IZ=4766.11 \
     NPTS=4 \
     SYY= 265.41 -265.41 265.41 -265.41 \
     SZZ= -317.74 -317.74 317.74 317.74 \
     T=ASYM LPY=14.60 LPZ=17.37 NM=Vert_37.uns
37 A=44.44 AYN=38.44 AZN=6.00 2A=0.00  \
     IX=3.18 IY=3301.10 IZ=4766.11 \
     NPTS=4 \
     SYY= 265.41 -265.41 265.41 -265.41 \
     SZZ= -317.74 -317.74 317.74 317.74 \
     T=ASYM LPY=16.00 LPZ=15.96 NM=Vert_37.uns
38 A=44.44 AYN=38.44 AZN=6.00 2A=0.00  \
     IX=3.18 IY=3301.10 IZ=4766.11 \
     NPTS=4 \
     SYY= 265.41 -265.41 265.41 -265.41 \
     SZZ= -317.74 -317.74 317.74 317.74 \
     T=ASYM LPY=14.60 LPZ=17.37 NM=Vert_37.uns
39 A=44.44 AYN=38.44 AZN=6.00 2A=0.00  \
     IX=3.18 IY=3301.10 IZ=4766.11 \
     NPTS=4 \
     SYY= 265.41 -265.41 265.41 -265.41 \
     SZZ= -317.74 -317.74 317.74 317.74 \
     T=ASYM LPY=14.60 LPZ=17.37 NM=Vert_37.uns
40 A=44.44 AYN=38.44 AZN=6.00 2A=0.00  \
     IX=3.18 IY=3301.10 IZ=4766.11 \
     NPTS=4 \
     SYY= 265.41 -265.41 265.41 -265.41 \
     SZZ= -317.74 -317.74 317.74 317.74 \
     T=ASYM LPY=14.60 LPZ=17.37 NM=Vert_37.uns
41 A=44.44 AYN=38.44 AZN=6.00 2A=0.00  \
     IX=3.18 IY=3301.10 IZ=4766.11 \
     NPTS=4 \
     SYY= 265.41 -265.41 265.41 -265.41 \
     SZZ= -317.74 -317.74 317.74 317.74 \
     T=ASYM LPY=14.60 LPZ=17.37 NM=Vert_37.uns
42 A=44.44 AYN=38.44 AZN=6.00 2A=0.00  \
     IX=3.18 IY=3301.10 IZ=4766.11 \
```

UPPER BRACES

Duplicates of #37

```
     NPTS=4 \
     SYY= 265.41 -265.41 265.41 -265.41 \
     SZZ= -317.74 -317.74 317.74 317.74 \
     T=ASYM LPY=14.60 LPZ=17.37 NM=Vert_37.uns
50 A=33.34 AYN=14.00 AZN=19.34 2A=0.00  \
     IX=2.15 IY=7691.88 IZ=1052.56 \
     NPTS=4 \
     SYY= 389.46 -389.46 389.46 -389.46 \
     SZZ= -211.44 -211.44 101.85 101.85 \
     T=ASYM LPY=16.00 LPZ=15.96 NM=Vert_50.uns
51 A=62.99 AYN=34.00 AZN=28.99 2A=0.00  \
     IX=59.39 IY=2077.11 IZ=830.85 \
     NPTS=4 \
     SYY= -276.95 -276.95 276.95 276.95 \
     SZZ= -97.75 97.75 -97.75 97.75 \
     T=ASYM LPY=17.00 LPZ=15.00 NM=U2_L4
52 A=32.25 AYN=20.25 AZN=12.00 2A=0.00  \
     IX=6.05 IY=2934.95 IZ=917.30 \
     NPTS=4 \
     SYY= 234.80 -234.80 234.80 -234.80 \
     SZZ= -122.31 -122.31 122.31 122.31 \
     T=ASYM LPY=17.00 LPZ=15.00 NM=Vert_52.uns
53 A=68.54 AYN=52.00 AZN=16.54 2A=0.00  \
     IX=55.23 IY=2870.93 IZ=1111.70 \
     NPTS=4 \
     SYY= -361.69 -361.69 361.69 361.69 \
     SZZ= -138.96 138.96 -138.96 138.96 \
     T=ASYM LPY=16.00 LPZ=15.88 NM=L4_U6
54 A=47.69 AYN=35.69 AZN=12.00 2A=0.00  \
     IX=8.34 IY=4103.18 IZ=1369.56 \
     NPTS=4 \
     SYY= 309.67 -309.67 309.67 -309.67 \
     SZZ= -182.61 -182.61 182.61 182.61 \
     T=ASYM LPY=16.00 LPZ=15.88 NM=Vert_54.uns
55 A=61.22 AYN=29.22 AZN=32.00 2A=0.00  \
     IX=22.76 IY=863.34 IZ=2181.35 \
     NPTS=4 \
     SYY= 100.46 -100.46 100.46 -100.46 \
     SZZ= -290.85 -290.85 290.85 290.85 \
     T=ASYM LPY=16.00 LPZ=15.88 NM=Vert_55.uns
56 A=29.02 AYN=18.30 AZN=10.72 2A=0.00  \
     IX=4.34 IY=2631.46 IZ=835.36 \
     NPTS=4 \
     SYY= 210.52 -210.52 210.52 -210.52 \
     SZZ= -111.38 -111.38 111.38 111.38 \
     T=ASYM LPY=16.00 LPZ=15.88 NM=Vert_56.uns
57 A=61.50 AYN=37.50 AZN=24.00 2A=0.00  \
     IX=11.53 IY=7019.66 IZ=2011.06 \
     NPTS=4 \
     SYY= 406.94 -406.94 406.94 -406.94 \
     SZZ= -268.14 -268.14 268.14 268.14 \
     T=ASYM LPY=16.00 LPZ=15.88 NM=Vert_57.uns
58 A=40.66 AYN=31.06 AZN=9.60 2A=0.00  \
     IX=4.35 IY=3341.31 IZ=1014.81 \
     NPTS=4 \
     SYY= 267.30 -267.30 267.30 -267.30 \
     SZZ= -135.31 -135.31 135.31 135.31 \
     T=ASYM LPY=16.00 LPZ=15.88 NM=Vert_58.uns
59 A=19.89 AYN=12.69 AZN=7.20 2A=0.00  \
     IX=1.34 IY=1746.44 IZ=591.43 \
     NPTS=4 \
     SYY= 139.71 -139.71 139.71 -139.71 \
     SZZ= -78.86 -78.86 78.86 78.86 \
     T=ASYM LPY=16.00 LPZ=15.88 NM=Vert_59.uns
60 A=34.55 AYN=25.91 AZN=8.64 2A=0.00  \
     IX=2.81 IY=2833.30 IZ=885.14 \
     NPTS=4 \
     SYY= 227.80 -227.80 227.80 -227.80 \
     SZZ= -118.02 -118.02 118.02 118.02 \
     T=ASYM LPY=16.00 LPZ=15.88 NM=Vert_60.uns
61 A=19.89 AYN=12.69 AZN=7.20 2A=0.00  \
     IX=1.34 IY=1746.44 IZ=591.43 \
     NPTS=4 \
     SYY= 139.71 -139.71 139.71 -139.71 \
     SZZ= -78.86 -78.86 78.86 78.86 \
     T=ASYM LPY=16.00 LPZ=15.88 NM=Vert_61.uns
```

```
70 A=11.17 AYN=12.00 AZN=3.75 2A=0.00  \
     IX=1.18 IY=385.3 IZ=24.6 \
     NPTS=4 \
     SYY= -54.60 -54.60 54.60 54.60 \
     SZZ= -7.30 7.30 -7.30 7.30 \
     T=ASYM LPY=12.00 LPZ=11.00 NM=14_CB_38
71 A=11.17 AYN=12.00 AZN=3.75 2A=0.00  \
     IX=1.18 IY=385.3 IZ=24.6 \
     NPTS=4 \
     SYY= -54.60 -54.60 54.60 54.60 \
     SZZ= -7.30 7.30 -7.30 7.30 \
     T=ASYM LPY=12.00 LPZ=11.00 NM=14_CB_38
72 A=11.17 AYN=12.00 AZN=3.75 2A=0.00  \
     IX=1.18 IY=385.3 IZ=24.6 \
     NPTS=4 \
     SYY= -54.60 -54.60 54.60 54.60 \
     SZZ= -7.30 7.30 -7.30 7.30 \
     T=ASYM LPY=12.00 LPZ=11.00 NM=14_CB_38
73 A=11.17 AYN=12.00 AZN=3.75 2A=0.00  \
     IX=1.18 IY=385.3 IZ=24.6 \
     NPTS=4 \
     SYY= -54.60 -54.60 54.60 54.60 \
     SZZ= -7.30 7.30 -7.30 7.30 \
     T=ASYM LPY=12.00 LPZ=11.00 NM=14_CB_38
74 A=49.09 AYN=40.00 AZN=9.09 2A=0.00  \
     IX=22.40 IY=2051.10 IZ=853.73 \
     NPTS=4 \
     SYY= -271.22 -271.22 271.22 271.22 \
     SZZ= -106.72 106.72 -106.72 106.72 \
     T=ASYM LPY=16.00 LPZ=15.13 NM=14_CB_167
75 A=66.81 AYN=57.60 AZN=9.21 2A=0.00  \
     IX=63.84 IY=3132.11 IZ=1229.21 \
     NPTS=4 \
     SYY= -386.20 -386.20 386.20 386.20 \
     SZZ= -153.65 153.65 -153.65 153.65 \
     T=ASYM LPY=16.00 LPZ=16.22 NM=14_CB_158_2PLS_16X3/8
76 A=41.7 \
     IX=22.40 IY=1667.8 IZ=658.9 \
     NPTS=4 \
     SYY= -226.2 -226.2 226.2 226.2 \
     SZZ= -85.0 85.0 -85.0 85.0 \
     T=ASYM NM=14_CB_142
78 A=25.6 \
     IX=22.40 IY=966.9 IZ=349.7 \
     NPTS=4 \
     SYY= -138.1 -138.1 138.1 138.1 \
     SZZ= -48.2 48.2 -48.2 48.2 \
     T=ASYM NM=14_CB_87
79 A=17.94 \
     IX=22.40 IY=641.5 IZ=107.3 \
     NPTS=4 \
     SYY= -92.2 -92.2 92.2 92.2 \
     SZZ= -21.5 21.5 -21.5 21.5 \
     T=ASYM NM=14_CB_61
80 A=38.98 AYN=25.55 AZN=13.43 2A=0.00  \
     IX=9.83 IY=2012.70 IZ=454.68 \
     NPTS=4 \
     SYY= -231.74 -231.74 231.74 231.74 \
     SZZ= -62.29 62.29 -62.29 62.29 \
     T=ASYM LPY=14.60 LPZ=17.37 NM=14_CB_111_10_0.5
81 A=15.59 \
     IX=22.40 IY=542.1 IZ=57.5 \
     NPTS=4 \
     SYY= -77.8 -77.8 77.8 77.8 \
     SZZ= -14.3 14.3 -14.3 14.3 \
     T=ASYM NM=14_CB_53
82 A=12.65 \
     IX=22.40 IY=429 IZ=45.1 \
     NPTS=4 \
     SYY= -62.7 -62.7 62.7 62.7 \
     SZZ= -11.3 11.3 -11.3 11.3 \
     T=ASYM NM=14_CB_43
83 A=12.65 \
     IX=22.40 IY=429 IZ=45.1 \
     NPTS=4 \
     SYY= -62.7 -62.7 62.7 62.7 \
```

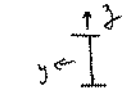

Duplicates of # 70.

Simplified.

MANUALLY ENTERED SECTION DATA
SEE EXCEL GRID

Note: I_x for sections 76, 83 & 85 are approximate.
Insignificant effect. ok

```
     SZZ= -11.3 11.3 -11.3 11.3 \
     T=ASYM NM=14_CB_43
84 A=62.21 AYN=53.44 AZN=8.77 2A=0.00  \
     IX=51.09 IY=2856.99 IZ=1140.41 \
     NPTS=4 \
     SYY= -358.02 -358.02 358.02 358.02 \
     SZZ= -142.55 142.55 -142.55 142.55 \
     T=ASYM LPY=16.00 LPZ=15.96 NM=14_CB_150_2PLS_16X9/16
85 A=20.0 \
     IX=22.40 IY=724.1 IZ=121.2 \
     NPTS=4 \
     SYY= -103 -103 103 103 \
     SZZ= -24.1 24.1 -24.1 24.1 \
     T=ASYM NM=14_CB_68
90 A=8.81 \
     IX=1.18 IY=289.6 IZ=17.5 \
     NPTS=4 \
     SYY= -41.8 -41.8 41.8 41.8 \
     SZZ= -5.20 5.20 -5.20 5.20 \
     T=ASYM NM=14_CB_30
91 A=59.38 \
     IX=22.40 IY=2538.1 IZ=979.8 \
     NPTS=4 \
     SYY= -324.8 -324.8 324.8 324.8 \
     SZZ= -124.4 124.4 -124.4 124.4 \
     T=ASYM NM=14_CB_202
92 A=74.99 \
     IX=22.40 IY=3280 IZ=1247 \
     NPTS=4 \
     SYY= -405.1 -405.1 405.1 405.1 \
     SZZ= -158.0 158.0 -158.0 158.0 \
     T=ASYM NM=14_CB_255
700 A=67.73 \
     IX=40 IY=871 IZ=14988 \
     NPTS=4 \
     SYY= -105.7 105.7 -105.7 105.7 \
     SZZ= -835.5 -835.5 835.5 835.5 \
     T=ASYM NM=36_CB_230
701 A=44.16 \
     IX=40 IY=250.4 IZ=9012 \
     NPTS=4 \
     SYY= -41.8 41.8 -41.8 41.8 \
     SZZ= -502.9 -502.9 502.9 502.9 \
     T=ASYM NM=36_CB_150
```

4-1-4
Loads

Loading

Approach

Dead Load (DLY, DLX, & DLZ) - The weights shown in the original American Bridge design calculations and drawings are used. These loads are applied throughout the model as uniform and point loads. DLY is the dead load applied in the vertical down (-Y) direction. DLX and DLZ are the dead load applied in the horizontal X and Z directions respectively.

Wind Load (WLX & WLZ) – Wind loads are calculated the wind load based on SEI/ASCE 7-05 and shape coefficient factors based on FEM 1.004 (Federation Europeenne De La Manutention, FEM 1.004, *Recommendation for the Calculation of Wind Loads on Crane Structures*, FEM Section 1, 2000. Refer to the Review Criteria at the beginning of the calculations.

Calculated wind loads compared well with the loads in the original American Bridge design calculations and drawings.

Earthquake Load – Lateral 1.0g inertia loads are applied as Dead Loads, see above. Load combinations are used to combine these parameter loads.

Operating Loads – Not considered.

DEAD LOAD SUMMARY

Units: kips, inches

GROUP	WEIGHT	X C.G.	Y C.G.	Z C.G.
STRUCTURE LOADS				
LowerChord	171.40	413.74	139.37	0.00
Upper Chord	265.40	395.50	588.00	0.00
Diagonals	290.72	217.96	355.19	0.00
Trans. Braces	297.67	361.42	322.55	0.45
Verticals	161.05	243.12	358.94	2.61
Top Cross Ties	95.76	502.00	588.00	0.00
Top Bracings	65.10	493.38	588.00	0.00
Trolley Girder	152.08	1200.09	237.00	0.00
Misc	0.00	0.00	0.00	0.00
SUBTOTAL STRUCTURE	1499.20	432.89	378.64	0.37
MISC. LOADS				
Counter Wt	192.20	-1440.00	393.00	192.00
Counter Wt	221.80	-1440.00	393.00	-192.00
Misc Pannel 2	128.00	-1072.00	364.50	0.00
Misc Pannel 4	120.00	-704.00	336.00	0.00
Misc Pannel 6	240.00	-336.00	336.00	0.00
Misc Pannel 8	120.00	0.00	336.00	0.00
Misc Pannel 10	240.00	336.00	336.00	0.00
Misc Pannel 0	80.00	-1440.00	393.00	0.00
Misc Pannel 3	120.00	-888.00	350.25	0.00
Misc Pannel 5	68.00	-520.00	336.00	0.00
Misc Pannel 12	60.00	680.00	336.00	0.00
Trolley A	38.00	2304.08	237.00	0.00
Trolley B	95.00	596.00	237.00	0.00
Trolley C	95.00	84.00	237.00	0.00
15 T Crane	248.00	-1247.00	828.00	0.00
SUBTOTAL MISC.	2066.00	-576.61	400.36	-2.75
TOTAL LOAD	3565.20	-152.11	391.22	-1.44

American Bridge 3564 k

DEAD LOAD DETAIL

Units: kips, inches

Group	Member	Length	Area	Factor	Length Factor	Addl'Uni Load	Uni Load	Weight	X c.g.	Y c.g.	Z c.g.
LowerChord	L0N TO L3N	744.80	41.70	1.650	1.00	0.00000	0.01949	14.52	-1072.00	141.10	192.00
	L4N TO L5N	368.00	83.60	1.650	1.00	0.00000	0.03909	14.38	-520.00	84.00	192.00
	L6N TO L9N	672.00	500.00	0.000	1.00	0.00000	0.00000	0.00	0.00	0.00	0.00
	L10N TO L11N	344.00	126.40	1.650	1.00	0.00000	0.05910	20.34	508.00	84.00	192.00
	L12N TO L15N	704.80	65.90	1.650	1.00	0.00000	0.03083	21.72	1024.00	160.50	192.00
	L16N TO L19N	688.00	41.70	1.650	1.00	0.00000	0.01949	13.40	1712.00	237.00	192.00
	L20N TO L21N	344.00	8.40	1.650	1.00	0.00000	0.00391	1.34	2228.00	237.00	192.00
	L0F TO L3F	744.80	41.70	1.650	1.00	0.00000	0.01949	14.52	-1072.00	141.10	-192.00
	L4F TO L5F	368.00	83.60	1.650	1.00	0.00000	0.03909	14.38	-520.00	84.00	-192.00
	L6F TO L9F	672.00	500.00	0.000	1.00	0.00000	0.00000	0.00	0.00	0.00	0.00
	L10F TO L11F	344.00	126.40	1.650	1.00	0.00000	0.05910	20.34	508.00	84.00	-192.00
	L12F TO L15F	704.80	65.90	1.650	1.00	0.00000	0.03083	21.72	1024.00	160.50	-192.00
	L16F TO L19F	688.00	41.70	1.650	1.00	0.00000	0.01949	13.40	1712.00	237.00	-192.00
	L20F TO L21F	344.00	8.40	1.650	1.00	0.00000	0.00391	1.34	2228.00	237.00	-192.00
Upper Chord	U0N TO U1N	368.00	44.80	1.650	1.00	0.00000	0.02095	7.70	-1256.00	588.00	192.00
	U2N TO U5N	736.00	71.10	1.650	1.00	0.00000	0.03325	24.48	-704.00	588.00	192.00
	U6N TO U9N	672.00	109.10	1.650	1.00	0.00000	0.05102	34.28	0.00	588.00	192.00
	U10N TO U13N	688.00	94.40	1.650	1.00	0.00000	0.04415	30.36	680.00	588.00	192.00
	U14N TO U17N	688.00	67.80	1.650	1.00	0.00000	0.03172	21.84	1368.00	588.00	192.00
	U18N TO U21N	688.00	43.70	1.650	1.00	0.00000	0.02043	14.04	2056.00	588.00	192.00
	U0F TO U1F	368.00	44.80	1.650	1.00	0.00000	0.02095	7.70	-1256.00	588.00	-192.00
	U2F TO U5F	736.00	71.10	1.650	1.00	0.00000	0.03325	24.48	-704.00	588.00	-192.00
	U6F TO U9F	672.00	109.10	1.650	1.00	0.00000	0.05102	34.28	0.00	588.00	-192.00
	U10F TO U13F	688.00	94.40	1.650	1.00	0.00000	0.04415	30.36	680.00	588.00	-192.00
	U14F TO U17F	688.00	67.80	1.650	1.00	0.00000	0.03172	21.84	1368.00	588.00	-192.00
	U18F TO U21F	688.00	43.70	1.650	1.00	0.00000	0.02043	14.04	2056.00	588.00	-192.00
Diagonals	D0N TO D1N	536.20	39.80	1.650	1.00	0.00000	0.01822	9.78	-1256.00	393.00	192.00
	D2N TO D3N	624.00	63.00	1.650	1.00	0.00000	0.02945	18.38	-888.00	336.00	192.00
	D4N TO D5N	624.00	68.50	1.650	1.00	0.00000	0.03204	20.00	-520.00	336.00	192.00
	D6N TO D7N	605.80	61.20	1.650	1.00	0.00000	0.02862	17.34	-168.00	336.00	192.00
	D8N TO D9N	605.80	49.10	1.650	1.00	0.00000	0.02295	13.90	168.00	336.00	192.00
	D10N TO D11N	610.20	66.80	1.650	1.00	0.00000	0.03123	19.06	508.00	336.00	192.00
	D12N TO D13N	610.20	62.20	1.650	1.00	0.00000	0.02908	17.74	852.00	336.00	192.00
	D14N TO D17N	982.80	41.70	1.650	1.00	0.00000	0.01949	19.16	1368.00	412.60	192.00
	D18N TO D19N	491.40	25.60	1.650	1.00	0.00000	0.01197	5.88	1884.00	412.60	192.00
	D20N TO D21N	491.40	17.90	1.650	1.00	0.00000	0.00839	4.12	2228.00	412.60	192.00
	D0F TO D1F	536.20	39.00	1.650	1.00	0.00000	0.01822	9.78	-1256.00	393.00	-192.00
	D2F TO D3F	624.00	63.00	1.650	1.00	0.00000	0.02945	18.38	-888.00	336.00	-192.00
	D4F TO D5F	624.00	68.50	1.650	1.00	0.00000	0.03204	20.00	-520.00	336.00	-192.00
	D6F TO D7F	605.80	61.20	1.650	1.00	0.00000	0.02862	17.34	-168.00	336.00	-192.00
	D8F TO D9F	605.80	49.10	1.650	1.00	0.00000	0.02295	13.90	168.00	336.00	-192.00
	D10F TO D11F	610.20	66.80	1.650	1.00	0.00000	0.03123	19.06	508.00	336.00	-192.00
	D12F TO D13F	610.20	62.20	1.650	1.00	0.00000	0.02908	17.74	852.00	336.00	-192.00
	D14F TO D17F	982.80	41.70	1.650	1.00	0.00000	0.01949	19.16	1368.00	412.60	-192.00
	D18F TO D19F	491.40	25.60	1.650	1.00	0.00000	0.01197	5.88	1884.00	412.60	-192.00
	D20F TO D21F	491.40	17.90	1.650	1.00	0.00000	0.00839	4.12	2228.00	412.60	-192.00
Trans. Braces	UN1 TO NL1	418.50	11.20	1.650	1.00	0.00000	0.00522	2.19	-1256.00	378.70	-192.00
Verticals	LN0	210.00	33.30	1.650	1.00	0.00000	0.01559	3.27	-1440.00	303.00	192.00
	LN4	252.00	32.30	1.650	1.00	0.00000	0.01508	3.80	-704.00	210.00	192.00
	NU0	180.00	33.30	1.650	1.00	0.00000	0.01559	2.81	-1440.00	498.00	192.00
	NU4	252.00	32.30	1.650	1.00	0.00000	0.01508	3.80	-704.00	462.00	192.00
	NL0	210.00	33.30	1.650	1.00	0.00000	0.01559	3.27	-1440.00	303.00	-192.00
	V4F TO FU39	504.00	32.30	1.650	1.00	0.00000	0.01508	7.60	-704.00	336.00	-192.00
	GN0	180.00	33.30	1.650	1.00	0.00000	0.01559	2.81	-1440.00	498.00	-192.00
	LM6 TO ML6	1008.00	47.70	1.650	1.00	0.00000	0.02230	22.46	-336.00	336.00	0.00
	LM8 TO ML8	1008.00	29.00	1.650	1.00	0.00000	0.01357	13.70	0.00	336.00	0.00
	LM10 TO ML10	1008.00	61.50	1.650	1.00	0.00000	0.02875	28.98	336.00	336.00	0.00
	LM12 TO ML12	1008.00	40.70	1.650	1.00	0.00000	0.01901	19.16	680.00	336.00	0.00
	LM14 TO ML14	855.00	19.90	1.650	1.00	0.00000	0.00930	7.94	1024.00	374.30	0.00
	LN16 TO UN16	549.00	34.60	1.650	1.00	0.00000	0.01615	8.87	1368.00	440.10	53.50
	LN18 TO NL22	2106.00	19.90	1.650	1.00	0.00000	0.00930	19.56	2056.00	412.60	0.00
	NL16	153.00	34.60	1.650	1.00	0.00000	0.01615	2.47	1368.00	313.50	-192.00

Group	Member	Length	Area	Factor	Length Factor	Addl'Uni Load	Uni Load	Weight	X c.g.	Y c.g.	Z c.g.
	LN2 TO NL2	894.00	20.00	1.650	1.00	0.00000	0.00935	8.36	-1072.00	364.70	0.00
	MU1 TO LN1	418.50	11.20	1.650	1.00	0.00000	0.00522	2.19	-1256.00	378.70	192.00
Top Cross Ties	HON TO H22F	4608.00	44.40	1.650	1.00	0.00000	0.02078	95.76	502.00	588.00	0.00
Top Bracings	U8X TO U21X	11419.40	12.20	1.650	1.00	0.00000	0.00570	65.10	493.40	588.00	0.00
Trans. Braces	NP6 TO QP6	384.00	8.80	1.650	1.00	0.00000	0.00412	1.58	-336.00	390.00	0.00
	MR6 TO RL22	1991.00	44.20	1.650	1.00	0.00000	0.02064	41.02	901.40	231.90	0.00
	TR6 TO RT6	1042.20	59.40	1.650	1.00	0.00000	0.02776	28.92	-336.00	336.10	0.00
	PC6 TO RL6	1004.20	8.80	1.650	1.00	0.00000	0.00412	4.14	-336.00	380.10	0.00
	LT6 TO TL6	264.00	500.00	0.000	1.00	0.00000	0.00000	0.00	0.00	0.00	0.00
	NP8 TO RL8	2242.40	8.80	1.650	1.00	0.00000	0.00412	9.22	0.00	349.70	0.00
	LT8 TO TL8	201.00	500.00	0.000	1.00	0.00000	0.00000	0.00	0.00	0.00	0.00
	NP10 TO QP10	384.00	8.80	1.650	1.00	0.00000	0.00412	1.58	336.00	390.00	0.00
	TR10 TO RT10	1042.60	75.00	1.650	1.00	0.00000	0.03506	36.56	336.00	336.70	0.00
	PC10 TO RL10	1047.00	8.80	1.650	1.00	0.00000	0.00412	4.32	336.00	374.90	0.00
	LT10 TO TL10	264.00	500.00	0.000	1.00	0.00000	0.00000	0.00	0.00	0.00	0.00
	NP12 TO LP2212237.20		8.80	1.650	1.00	0.00000	0.00412	50.30	1503.70	396.80	0.00
	SGN	268.10	11.20	1.650	1.00	0.00000	0.00522	1.40	-1348.00	490.50	192.00
	LN3 TO NL3	447.00	15.60	1.650	1.00	0.00000	0.00729	3.26	-888.00	224.30	0.00
	MU3 TO S3F	876.00	11.20	1.650	1.00	0.00000	0.00522	4.58	-822.50	462.00	55.30
	LN5	252.00	12.70	1.650	1.00	0.00000	0.00591	1.49	-520.00	210.00	192.00
	MU5	252.00	11.20	1.650	1.00	0.00000	0.00522	1.32	-520.00	462.00	192.00
	NL5	252.00	12.70	1.650	1.00	0.00000	0.00591	1.49	-520.00	210.00	-192.00
	UM5 TO S6F	3095.60	11.20	1.650	1.00	0.00000	0.00522	16.18	-165.70	462.00	-25.70
	LN11	252.00	12.70	1.650	1.00	0.00000	0.00591	1.49	508.00	215.00	192.00
	MU11 TO S20F	5598.00	11.20	1.650	1.00	0.00000	0.00522	29.24	1301.20	485.10	0.00
Trolley Girder	R8N TO R21F	4800.00	67.70	1.650	1.00	0.00000	0.03166	152.08	1200.10	237.00	0.00
Trans. Braces	L2X TO L3X	1069.80	12.20	1.650	1.00	0.00000	0.00570	6.15	-988.00	112.50	0.00
	J2N TO J4F	768.00	44.40	1.650	1.00	0.00000	0.02078	15.96	-888.00	112.50	0.00
	L4X TO LX5	830.20	12.20	1.650	1.00	0.00000	0.00570	4.74	-520.00	84.00	0.00
	J1N TO J1	304.00	44.40	1.650	1.00	0.00000	0.02078	7.99	-1256.00	169.50	0.00
	K13 TO K14	829.00	8.80	1.650	1.00	0.00000	0.00412	3.46	-1164.00	155.30	0.00
	TC6 TO CT6	120.00	500.00	0.000	1.00	0.00000	0.00000	0.00	0.00	0.00	0.00
	J0N TO J0F	384.00	44.40	1.650	1.00	0.00000	0.02078	7.98	-1440.00	198.00	0.00
	K16N TO K21F	2390.40	8.80	1.650	1.00	0.00000	0.00412	9.84	1884.00	237.00	0.00
	OX1 TO OX2	1094.60	500.00	0.000	1.00	0.00000	0.00000	0.00	0.00	0.00	0.00
	UM3	252.00	11.20	1.650	1.00	0.00000	0.00522	1.32	-888.00	462.00	-192.00
Misc	TC8 TO 40	1126.40	500.00	0.000	1.00	0.00000	0.00000	0.00	0.00	0.00	0.00
Total								1499.20	432.89	378.64	0.37

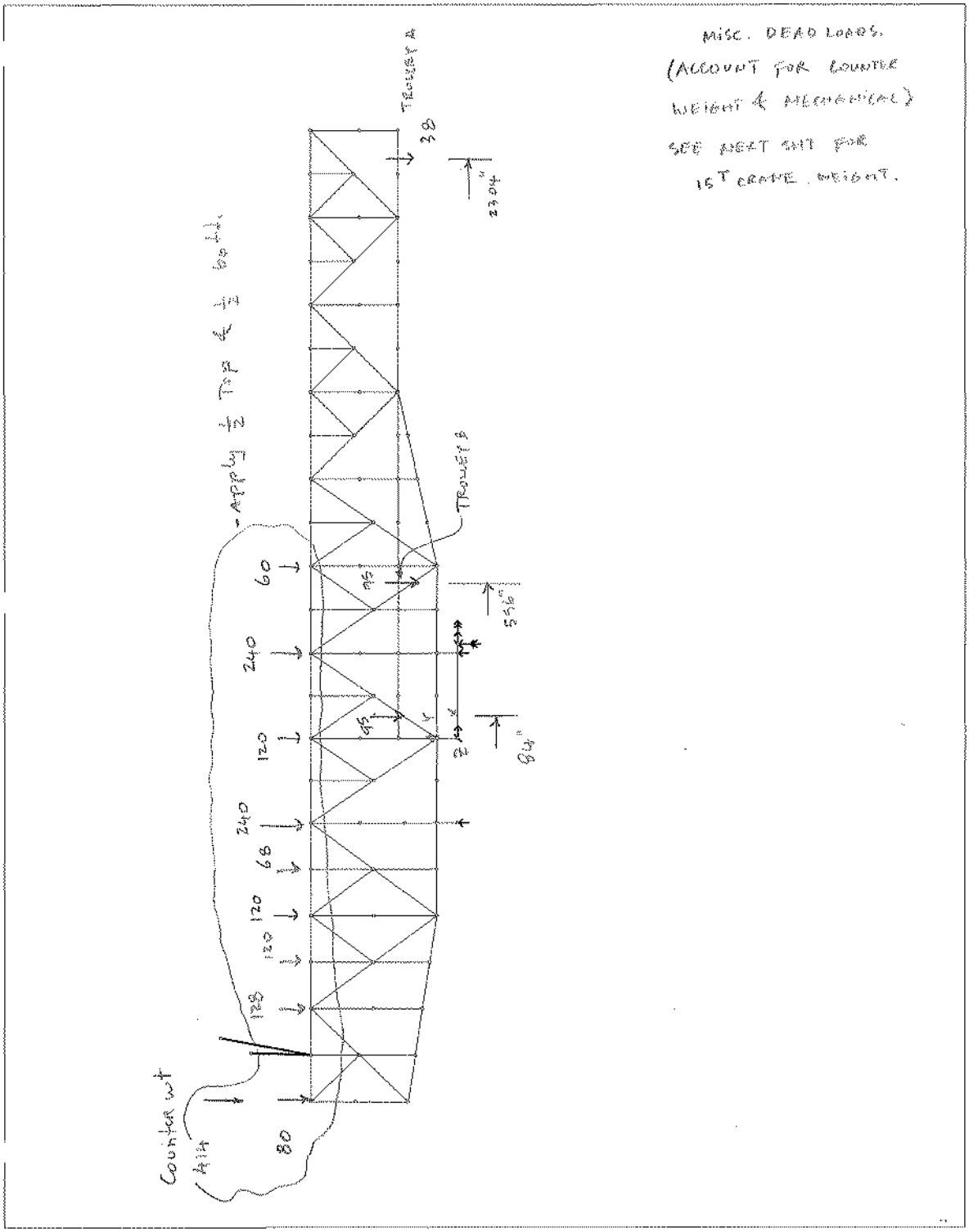
MISC. DEAD LOADS.
(ACCOUNT FOR COUNTER WEIGHT & MECHANICAL)
SEE NEXT SHT FOR 15T CRANE WEIGHT.
TRUSS #A
TRUSS #B
- APPLY ½ TOP & ½ BOTT.
COUNTER WT
80
120
240
60
68
120
240
120
240
60
38
23 3/4"
5 5/16"
8 1/4"

REF: PW# 36386, 36405

LOADS FROM 1ST CRANE

DEAD LOAD

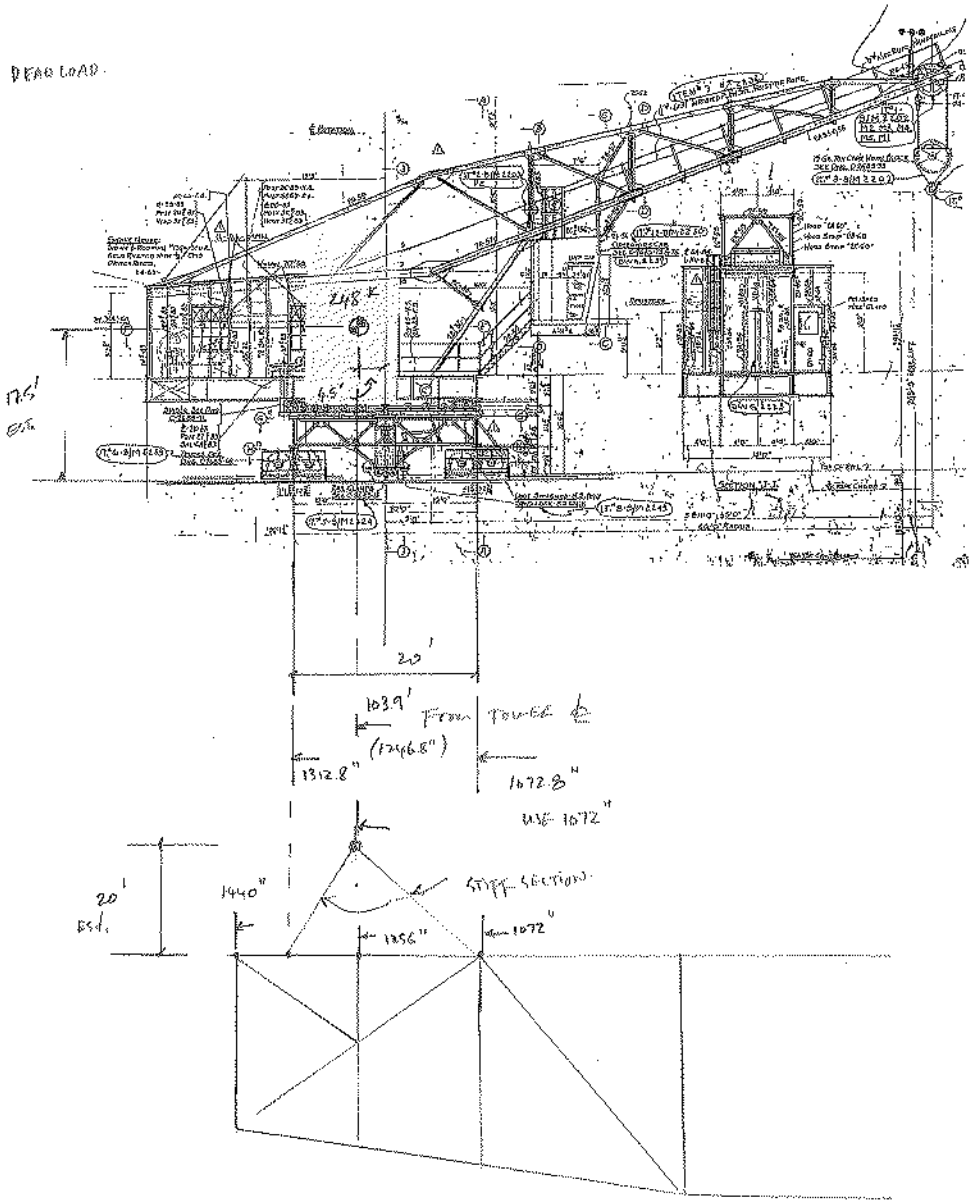

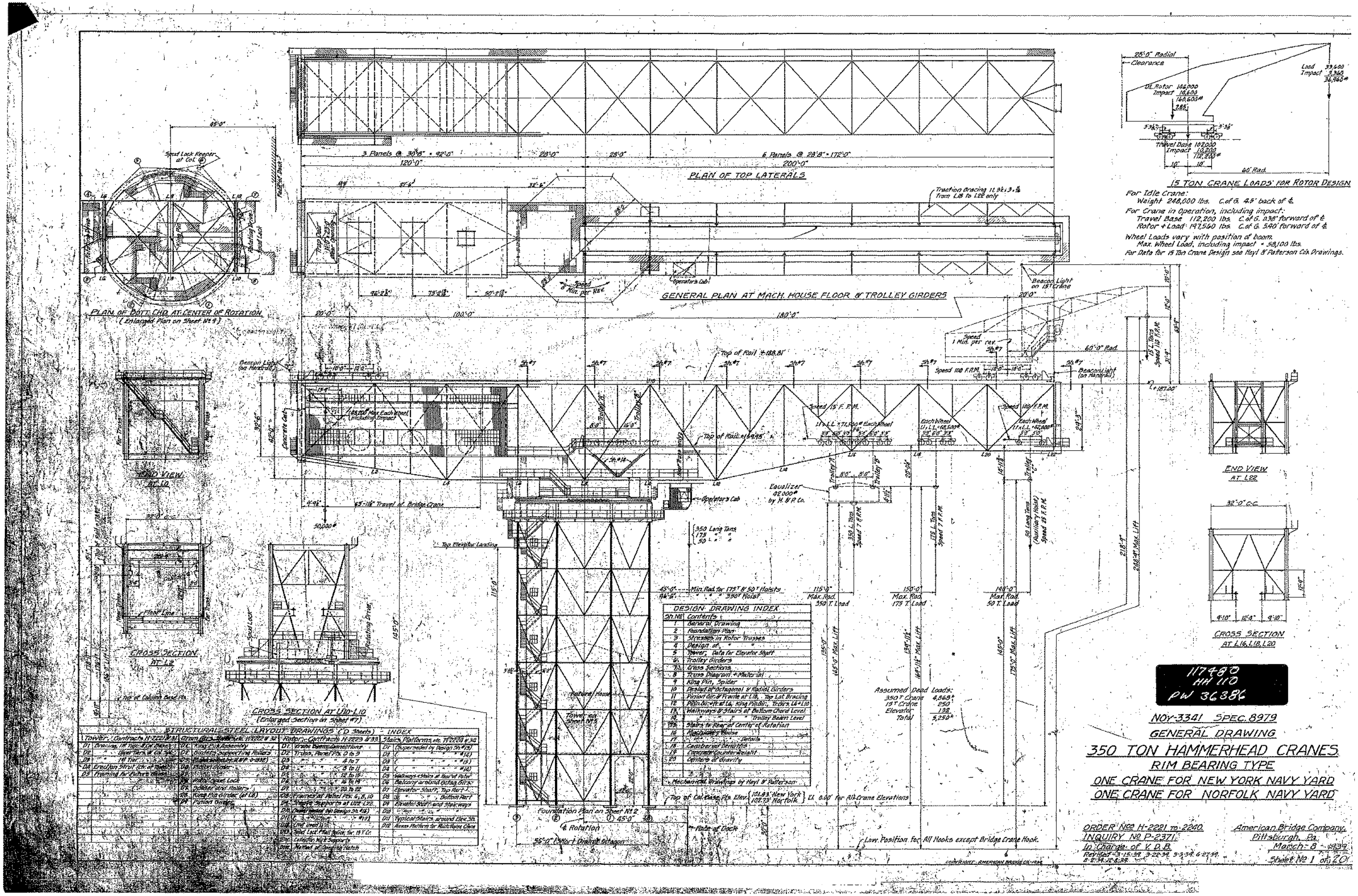

117480
HH 110
PW 36386

NOY-3341 SPEC. 8979

GENERAL DRAWING

350 TON HAMMERHEAD CRANES

RIM BEARING TYPE

ONE CRANE FOR NEW YORK NAVY YARD

ONE CRANE FOR NORFOLK NAVY YARD

ORDER No. H-2221 to 2240
INQUIRY No. P-2371
In Charge of V.D.B.
Revised 3-15-39, 3-22-39, 5-3-39, 6-27-39, 8-2-39, 12-8-39

American Bridge Company
Pittsburgh, Pa.
March 8 - 1939
Sheet No 1 of 20

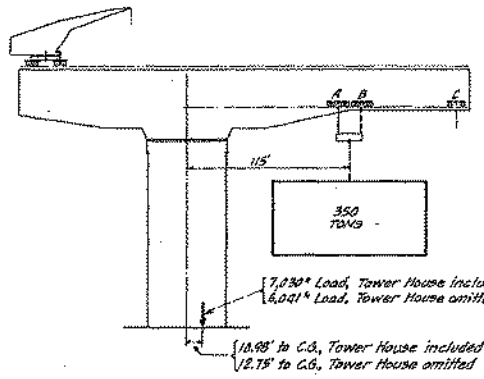

	Load	Lever Arm	Moment about ℄ Rotation
50 Ton Trolley	38*	+ 190'	+ 7,220'*
175 Ton Outboard Trolley & Load	95*	+ 123	+ 70,356
175 Ton Inboard Trolley & Load	57*	+ 107	+ 61,203
Tower	1,520	0	
Ropes	3	- 49	- 147
15 Ton Crane	250	- 103.9	- 25,975
Rotor, Machinery, Counterweight	3,086	- 11.52	- 35,551
	6,041*		+ 118,780'* - 61,673'*
Tower House	989	0	- 61,673
	7,030*		+ 57,107'*

Center of Gravity, Tower House included = $\frac{57,107}{7,030}$ = + 10.98'

" " " , Tower House omitted = $\frac{77,107}{6,041}$ = + 12.75'

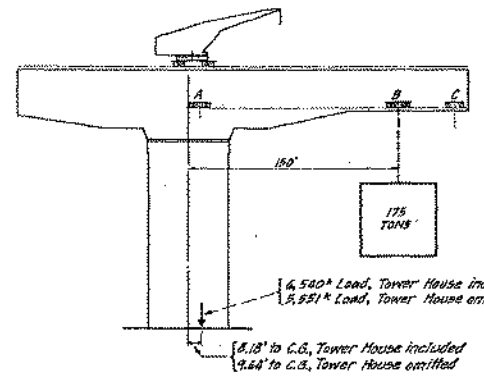

	Load	Lever Arm	Moment about ℄ Rotation
50 Ton Trolley	38*	+ 190'	+ 7,220'*
175 Ton Outboard Trolley & Load	548	+ 150	+ 82,200
175 Ton Inboard Trolley	95	+ 8	+ 760
Tower	1,520	0	
Ropes	14	- 80	- 1,120'*
15 Ton Crane	250	0	
Rotor, Machinery, Counterweight	3,086	- 11.52	- 35,551
	5,551*		+ 90,180'* - 36,671'*
Tower House	989	0	- 36,671
	6,540*		+ 53,509'*

Center of Gravity, Tower House included = $\frac{53,509}{6,540}$ = + 8.18'

" " " , Tower House omitted = $\frac{53,509}{5,551}$ = + 9.64'

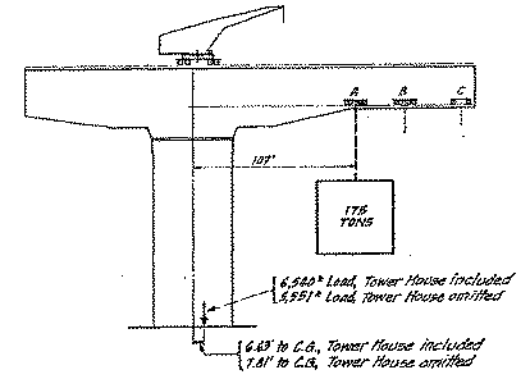

	Load	Lever Arm	Moment about ℄ of Rotation
50 Ton Trolley	38*	+ 190*	+ 7,220'*
175 Ton Outboard Trolley	95	+ 150	+ 14,250
175 Ton Inboard Trolley & Load	548	+ 107	+ 58,636
Tower	1,520	0	
Ropes	14	- 80	- 1,120'*
15 Ton Crane	250	0	
Rotor, Machinery, Counterweight	3,086	- 11.52	- 35,551
	5,551*		+ 80,036'* - 36,671'*
Tower House	989	0	- 36,671
	6,540*		43,365'*

Center of Gravity, Tower House included = $\frac{43,365}{6,540}$ = + 6.63'

" " " , Tower House omitted = $\frac{43,365}{5,551}$ = + 7.81'

Total Weight of Rotor (Panel Loads, Sheet 14)	3,085,887*	
Deduct Concrete Counterweight	414,352	
Rotor without Counterweight		2,671,535*
Engines A and B	246,000	
Engine C	80,000	
Panels	25,000	
Rotate Engine	70,000	
Operators Cab	10,500	
Supports (by H&P)	52,765	
Wires	15,000	
Bridge Crane	57,000	
Roofing 23,780 + Insulation 14,250 + Seats 11,580	49,610	
Deduct	608,875*	
		2,065,660*
Weight of Tower	1,510,841	
Deduct Rack Gears (by H&P)	60,776	
		1,450,065
Elevator Framing and Stairs		103,000
Base Pts. (H-2221-XI)		46,871
ESTIMATED SHIPPED WEIGHT		3,665,596*
Shipped Weight H-2221	698,871*	
H-2221-XI	46,871	
H-2222	1,036,095	
H-2223	1,575,266	
H-2224	291,698	
SHIPPED WEIGHT		3,648,801*

Approx. 2%

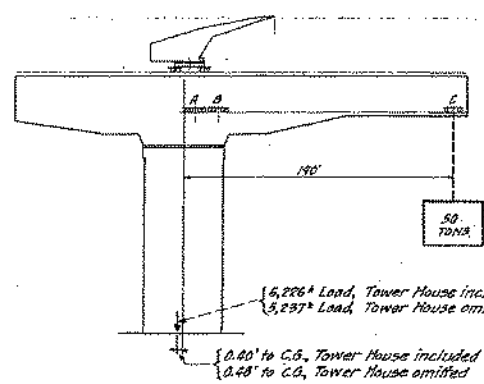

	Load	Lever Arm	Moment about ℄ Rotation
50 Ton Trolley and Load	168*	+ 190'	+ 31,920'*
175 Ton Outboard Trolley	95	+ 25	+ 2,375
175 Ton Inboard Trolley	95	+ 8	+ 760
15 Ton Crane	250	0	
Ropes	25	- 80	- 2,006'*
Tower	1,520	0	
Rotor, Machinery, Counterweight	3,086	- 11.52	- 35,551
	5,237*		+ 35,055'* - 37,557'*
Tower House	989	0	- 35,055
	6,226*		- 2,502'*

Center of Gravity, Tower House included = $\frac{2,502}{6,226}$ = - 0.40'

" " " , Tower House omitted = $\frac{2,502}{5,237}$ = - 0.48'

Boom 3086

Trolleys 38 + 95 + 95 = 228

15 T CR 250

Σ 3564

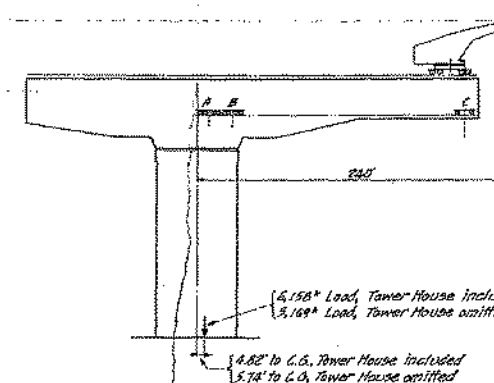

	Load	Lever Arm	Moment about ℄ Rotation
50 Ton Trolley	38*	+ 190'	+ 7,220'*
175 Ton Outboard Trolley	95	+ 25	+ 2,375
175 Ton Inboard Trolley	95	+ 8	+ 760
Tower	1,520	0	
Ropes	25	- 80	- 2,006'*
15 Ton Crane and Load	310	- 103.9	- 32,210
Rotor, Machinery, Counterweight	3,086	- 11.52	- 35,551
	5,169*		+ 67,265'* - 37,557'*
Tower House	989	0	- 37,557
	4,158*		+ 29,708'*

Center of Gravity, Tower House included = $\frac{29,708}{4,158}$ = + 4.82'

" " " , Tower House omitted = $\frac{29,708}{3,169}$ = + 5.74'

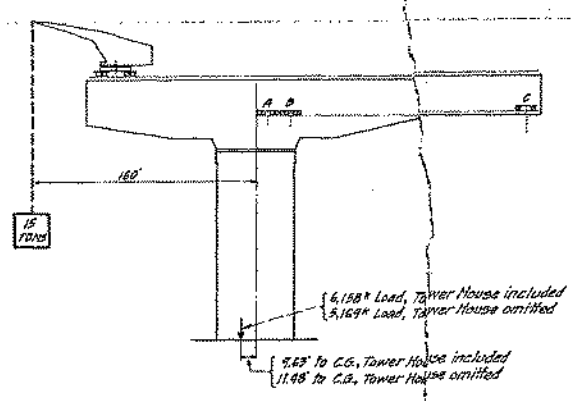

	Load	Lever Arm	Moment about ℄ Rotation
50 Ton Trolley	38*	+ 190'	+ 7,220'*
175 Ton Outboard Trolley	95	+ 25	+ 2,375
175 Ton Inboard Trolley	95	+ 8	+ 760
Tower	1,520	0	
Ropes	25	- 80	- 2,006'*
15 Ton Crane and Load	310	- 103.9	- 32,210
Rotor, Machinery, Counterweight	3,086	- 11.52	- 35,551
	5,169*		+ 10,333'* - 69,867'*
Tower House	989	0	+ 10,333
	4,158*		- 59,312'*

Center of Gravity, Tower House included = $\frac{59,312}{4,158}$ = - 9.63'

" " " , Tower House omitted = $\frac{59,312}{3,169}$ = - 11.48'

117480
HH 110
PW# 36405

CENTERS OF GRAVITY

350 TON HAMMERHEAD CRANES

RIM BEARING TYPE

ONE CRANE FOR NEW YORK NAVY YARD
ONE CRANE FOR NORFOLK NAVY YARD

ORDER Nos H-2221 to 2240.
INQUIRY No P-2371.
In Charge of V.D.B.
Revised

American Bridge Company.
Pittsburgh, Pa.
July - 19 - 1940.
Sheet No 20 of

COPYRIGHT - AMERICAN BRIDGE CO. 1940

PRESSURE. $q_z G$ = 32 psf @ Boom ℄ Elevation 130' WIND LOAD.

(28.8 psf is shown in Basis of Analysis. 32 psf is used for the boom strength analysis which is conservative.)

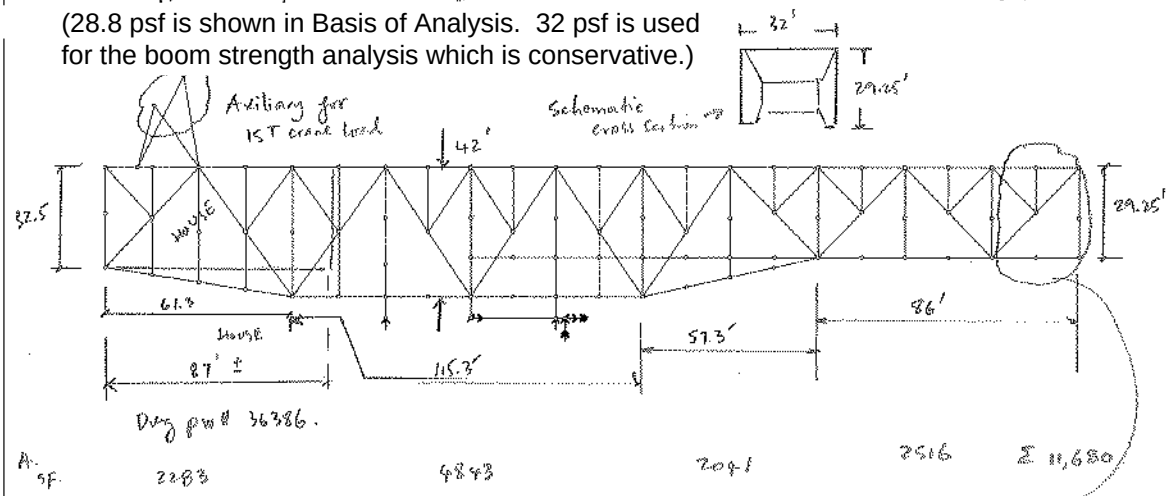

REF: FEM1.004 (Federation Europeenne De La Manutention, FEM 1.004, *Recommendation for the Calculation of Wind Loads on Crane Structures*, FEM Section 1, 2000.)

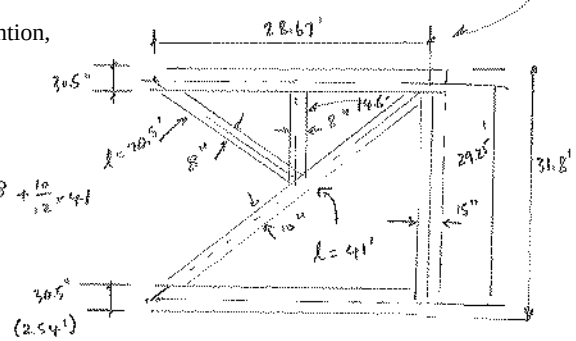

gross Area. 31.8' × 28.67' = 912 SF.

Solid Area: $2.54 \times 12 \times 28.67 + \frac{8}{12}(20.5 + 14.6) + \frac{15}{12} \times 31.8 + \frac{10}{12} \times 41$

$= 146.6 + 23.4 + 39.8 + 34.2$

$= 243$ SF.

Solidity Ratio: $\frac{243}{912} = 0.27$

Spacing Ratio: $\frac{32'}{31.8'} = 1.0$. Shielding Coef. $\eta = 0.59$ (Table T 5.2).
(Page 13 of FEM1.004)

& Fig. FA 3.4 (Page 23 of FEM1.004)

$F = (1+\eta) A q C_f = (1+0.59) \times 243 \times 1.6\, q = 618\, q$

$\frac{618}{912} = 0.68$; 68% gross area.

$F = 0.68 \times 11{,}680 \times 0.032 = 253^k$ USED 273 K ON ANALYSES. (20 K for house) See next sht

+ 13 K ON 15 T CRANE

285 K total Z dir

$\frac{1}{2} \times 273 + 13 = 150^k$ in X dir

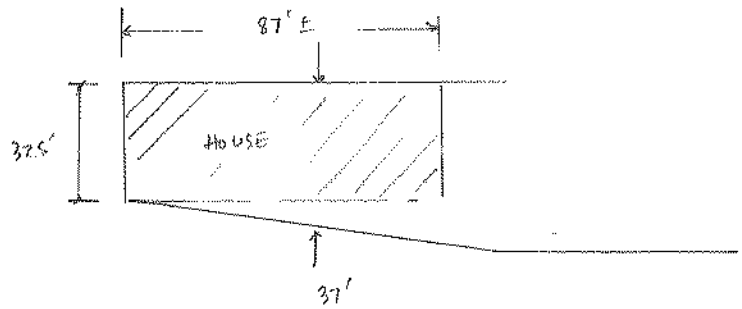

USE 0.68 gross Area. $0.68 \times 37' = 25.$

(See prev. sht)

Force on House

$(32.5 - 25) \times 87 \times 0.032 = 20^{k}$

E DIR: 273 K

WIND LOAD

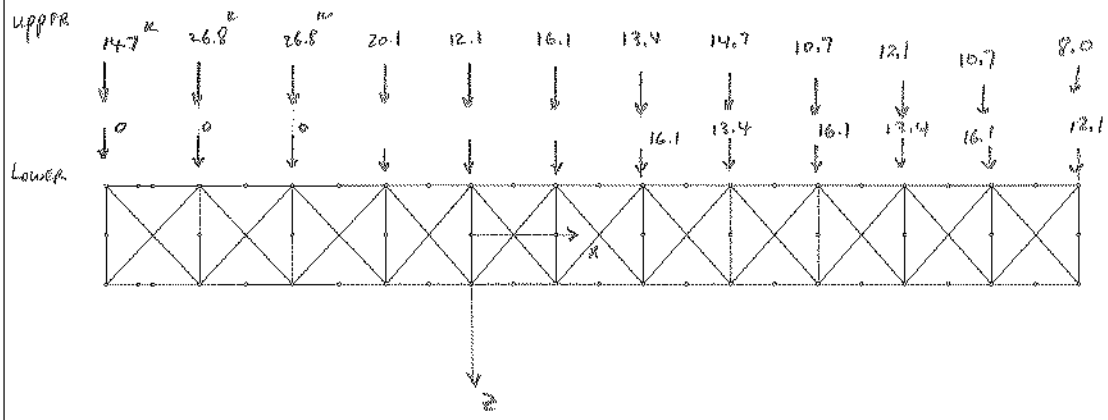

IN X DIR. USE $\frac{1}{2}$ WIND Σ.

REF. AMERICAN BRIDGE

WIND ON UPPER LATERAL BRACING

Assume Wind Forces to be resisted by Reactions from Frames at U6-L6 and U10-L10

Concentrations from 30# Wind on Rotor

Wind on Upper Chord	11k	20	20	15	9	12	10	11	8	9	8	6k
W. Transferred from Lower Chd.							12	10	12	10	12	9k
Total	11k	20	20	15	9	12	22	21	20	19	20	15k
	U0	U2	U4	U6	U8	U10	U12	U14	U16	U18	U20	U22

Stresses from 30# Wind on Rotor and Hoists, locked Position

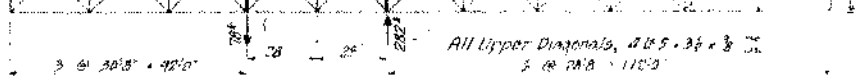

30 # WIND. Σ: 204 K.

Ref. American Bridge Dwg # PW 36396

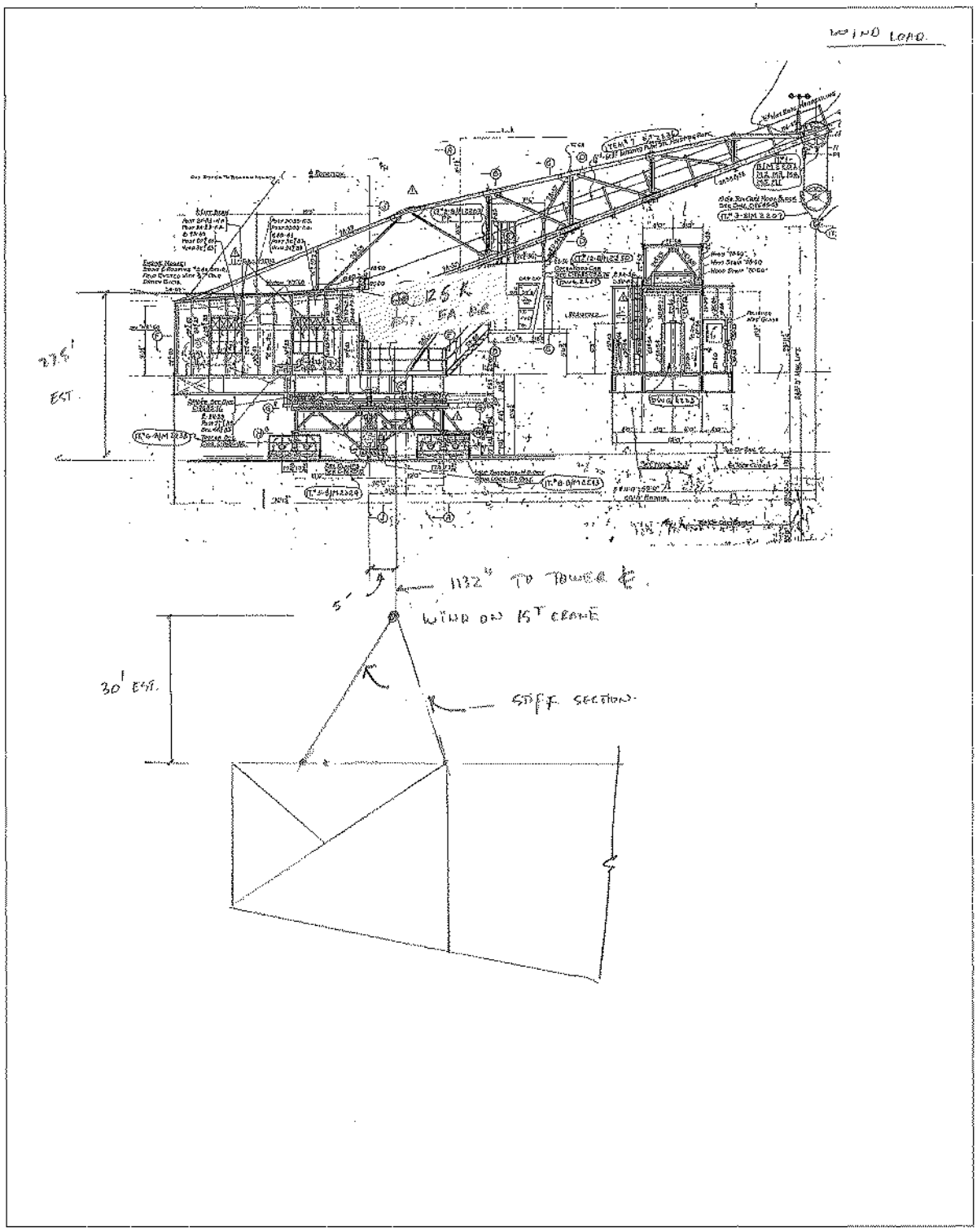
WIND LOAD.
@ 125 K
PER EA. DIE
275'
EST.
5'
1132" TO TOWER ℄.
WIND ON 15T CRANE
30' EST.
STIFF SECTION.

4-1-5
Reactions & Deflections

SAP ANALYSIS FILE: S968BOOM.lin

------ F O R C E S - B O U N D A R Y E L E M E N T S ------
(ELEMENT LOCAL COORDINATE SYSTEM)

Joint: 10

LOADCASE	X-FORCE	Y-FORCE	Z-FORCE	XX-MOMENT	YY-MOMENT	ZZ-MOMENT
DLX	0.0	1042.5	0.0	0.0	0.0	0.0
DLY	0.0	-1780.8	0.0	0.0	0.0	0.0
DLZ	0.0	-1850.7	0.0	0.0	0.0	0.0
WLX	0.0	56.6	0.0	0.0	0.0	0.0
WLZ	0.0	-278.0	0.0	0.0	0.0	0.0

Joint: 20

LOADCASE	X-FORCE	Y-FORCE	Z-FORCE	XX-MOMENT	YY-MOMENT	ZZ-MOMENT
DLX	0.0	1033.1	0.0	0.0	0.0	0.0
DLY	0.0	-1308.8	0.0	0.0	0.0	0.0
DLZ	0.0	1850.7	0.0	0.0	0.0	0.0
WLX	0.0	55.9	0.0	0.0	0.0	0.0
WLZ	0.0	278.0	0.0	0.0	0.0	0.0

Joint: 30

LOADCASE	X-FORCE	Y-FORCE	Z-FORCE	XX-MOMENT	YY-MOMENT	ZZ-MOMENT
DLX	0.0	-1042.5	0.0	0.0	0.0	0.0
DLY	0.0	-488.5	0.0	0.0	0.0	0.0
DLZ	0.0	-1781.6	0.0	0.0	0.0	0.0
WLX	0.0	-56.6	0.0	0.0	0.0	0.0
WLZ	0.0	-82.8	0.0	0.0	0.0	0.0

Joint: 40

LOADCASE	X-FORCE	Y-FORCE	Z-FORCE	XX-MOMENT	YY-MOMENT	ZZ-MOMENT
DLX	0.0	-1033.1	0.0	0.0	0.0	0.0
DLY	0.0	-487.2	0.0	0.0	0.0	0.0
DLZ	0.0	1781.6	0.0	0.0	0.0	0.0
WLX	0.0	-55.9	0.0	0.0	0.0	0.0
WLZ	0.0	82.8	0.0	0.0	0.0	0.0

Joint: PIN

LOADCASE	X-FORCE	Y-FORCE	Z-FORCE	XX-MOMENT	YY-MOMENT	ZZ-MOMENT
DLX	3570.2	0.0	-11.7	0.0	0.0	0.0
DLY	0.0	0.0	0.0	0.0	0.0	0.0
DLZ	-519.9	0.0	4804.9	0.0	0.0	0.0
WLX	150.0	0.0	0.0	0.0	0.0	0.0
WLZ	142.0	0.0	-52.8	0.0	0.0	0.0

Joint: SL

LOADCASE	X-FORCE	Y-FORCE	Z-FORCE	XX-MOMENT	YY-MOMENT	ZZ-MOMENT
DLX	-4.9	0.0	11.7	0.0	0.0	0.0
DLY	0.0	0.0	0.0	0.0	0.0	0.0
DLZ	519.9	0.0	-1239.7	0.0	0.0	0.0
WLX	0.0	0.0	0.0	0.0	0.0	0.0
WLZ	-142.0	0.0	338.6	0.0	0.0	0.0

------ C O O R D S - B O U N D A R Y E L E M E N T S ------
(GLOBAL COORDINATE SYSTEM)

JOINT NAME	GLOBAL COORDINATES X	Y	Z
10	-336.0	0.0	192.0
20	-336.0	0.0	-192.0
30	336.0	0.0	192.0
40	336.0	0.0	-192.0
PIN	0.0	0.0	0.0
SL	372.0	0.0	156.0

------ RESULTANTS OF APPLIED LOADS IN REFERENCE TO GLOBAL AXES ------

LOADING	Fx or MOMENTS:	Pseudo Dy -Mz/Fx or Mz	Pseudo Dz My/Fx or My	Fy or MOMENTS:	Pseudo Dx Mz/Fy or Mz	Pseudo Dz -Mx/Fy or Mx	Fz or MOMENTS:	Pseudo Dx -My/Fz or My	Pseudo Dy Mx/Fz or Mx
DLX	3.57E+03	3.91E+02	-1.44E+00	MOMENTS:	-1.39E+06	1.56E-02	MOMENTS:	-5.13E+03	1.56E-02
DLY	MOMENTS:	5.42E+05	5.50E-09	-3.57E+03	-1.52E+02	-1.44E+00	MOMENTS:	5.50E-09	-5.13E+03
DLZ	MOMENTS:	-4.88E-02	5.42E+05	MOMENTS:	-4.88E-02	1.39E+06	3.57E+03	-1.52E+02	3.91E+02
WLX	1.50E+02	5.04E+02	-3.47E-11	MOMENTS:	-7.56E+04	-2.44E-04	MOMENTS:	-5.20E-09	-2.44E-04

```
WLZ          MOMENTS: -3.66E-03 -1.40E+05    MOMENTS: -3.66E-03  1.39E+05    2.86E+02  5.18E+02  4.85E+02

 Note:  Pseudo centers of action Dx, Dy, and Dz may not be meaningful if more than one global
        force resultant (Fx, Fy, or Fz) exists in the same loading.

              LIFTECH RESULTANT VERSION 6.0.1
              Running  Date                11/28/12
              Starting Time                 3:43:04 PM
              Ending   Time                 3:43:04 PM
              Elapsed  Time                 0:00:00
```

FOR INFORMATION ONLY

DEFLECTIONS

Loading: DLY x60 From: X:\S196B\Calcs\LAS\S96BBOOM.lis

LOADING: DLY 3560 K

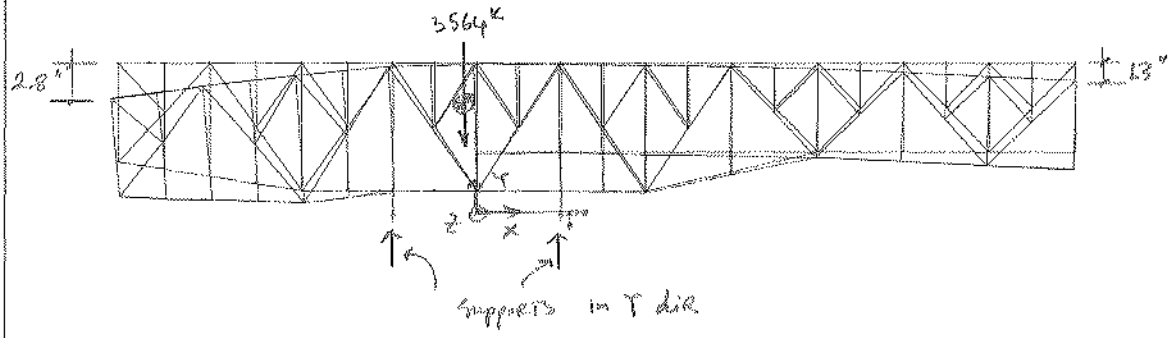

4-1-6
Load Combinations

Load Combinations

Load combinations are defined in the COMB0.DAT file. All load combinations for stress analysis use ASD load combinations.

Refer to Attachment 3-1 – Detailed Basis of Analysis for additional information.

COMB0.DAT

```
Liftech Combination File
COMB     5W    7W      5EX     5EZ     8X     8Z
FS      1.20  1.20     1.20    1.20    1.20    1.20
DLY     1.00  0.60     1.03    1.03    0.57    0.57
DLX     0     0        0.025   0       0.025   0
DLZ     0     0        0       0.025   0       0.025
WL<     1.00  1.00     0       0       0       0
```

Note: FS is the ratio of the allowable for a given load combination and the basic allowable stress. Some criteria allow allowable stresses to be increased for short term loads (e.g. earthquake and impact loads). The criteria for this project does not allow for such an increase. However, the allowable stresses have been increased by 20% to account for the consideration of secondary stresses. Refer to Attachments 3-1 and 4-1-1.

Loads:

```
DLY     Dead Load in Y direction = 1.0g in the –Y direction
DLX     Dead Load in X direction = 1.0g in the +X direction
DLZ     Dead Load in Z direction = 1.0g in the +Z direction
WL<     Angled Wind Load – All angles considered.  Uses a
        portion of WLX and WLZ as components of wind at all
        angles.
WLX     Wind Load in +X direction
WLZ     Wind Load in +Z direction
```

Factors:

The 1.03 DLY factor used for Combination 5EX and 5EZ; includes 1.0 vertical gravity load and a vertical earthquake component (0.7*0.04).

The 0.57 DLY factor used for Combinations 8X and 8Z; includes 0.6 vertical gravity load and a vertical earthquake component (-0.7*0.04).

The 0.025 DLX and DLZ factors used for Combinations 5EX, 5EZ, 8X, and 8Z is based on 0.7*0.035.

4-1-7
Member Buckling Factors

For Fixed joints

x:\s1969\calcs\grids-visio\[pipe and member buckling(aisc2005).xls]pipes
By: JKH
Version: 4.0 Date: 4/7/2009 By: YD Chk'd: 0 Apv'd: 0

Pipe and Member Buckling (AISC2005)
Units: k, in
File Printed: 12/29/12

Compressive Strength for Flexural Buckling of Members without Slender Elements

$$Case(a) \quad \frac{kl}{r} \le 4.71\sqrt{\frac{E}{F_y}} \qquad F_{cr} = \left[0.658^{\frac{F_y}{F_e}}\right]F_y \qquad [E3-2]$$

$$Case(b) \quad \frac{kl}{r} \ge 4.71\sqrt{\frac{E}{F_y}} \qquad F_{cr} = 0.877F_e \qquad [E3-3]$$

$$F_e = \frac{\pi^2 E}{\left(\frac{kl}{r}\right)^2} \qquad [E3-4]$$

$$F_a = \frac{F_{cr}}{\Omega}$$

$$\omega = \frac{aF_y}{F_a}$$

E 29000 ksi
a 0.60 AISC (1/1.67 for AISC, 0.67 for FEM)
Ω 1.67

Member	Incidences	Sect.	I in^4	A in^2	r in	k	Length in	Fy ksi	Fa ksi	kl/r	4.71(E/Fy)^0.5	Fcr ksi	Fa ksi	Omega Calc	Omega Used
Lower Chord	L0N-L3N	10	3463	41.7	9.11	1	372	45	175.32	40.82	120.80	40.42	24.20	1.11	1.11
	U4N-L5N	11	6978	83.6	9.14	1	368	45	180.06	40.28	120.80	40.53	24.27	1.11	1.11
	L10N-L11N	13	10275	126.4	9.02	1	344	45	200.68	38.15	120.80	40.97	24.53	1.10	1.10
	L12N-L15N	14	5738	65.9	9.33	1	352	45	205.30	37.72	120.80	41.08	24.58	1.10	1.10
Upper Chord	U0N-U1N	20	3397	44.8	8.71	1	368	45	163.57	42.26	120.80	40.11	24.02	1.12	1.12
	U2N-U5N	21	5572	71.1	8.85	1	368	45	168.99	41.68	120.80	40.25	24.10	1.12	1.12
	U6N-U9N	22	8889	109.1	9.03	1	336	45	211.07	37.20	120.80	41.16	24.65	1.09	1.09
	U10N-U13N	23	7590	94.4	8.97	1	344	45	198.48	38.36	120.80	40.93	24.51	1.10	1.10
	U14N-U17N	24	5140	67.8	8.70	1	344	45	187.05	39.52	120.80	40.69	24.36	1.11	1.11
	U18N-U22N	25	3184	43.7	8.54	1	344	45	179.91	40.30	120.80	40.53	24.27	1.11	1.11
Diagonals	D0N,D1N	80	2013	39.0	7.18	0.75	536	45	93.31	55.85	120.80	36.77	22.02	1.22	1.22
		80	455	39.0	3.42	0.75	268	45	84.36	58.85	120.80	36.00	21.55	1.25	1.25
	D2N,D3N	51	2077	63.0	5.74	0.75	624	45	43.97	81.51	120.80	29.32	17.56	1.53	1.53
		51	831	63.0	3.63	0.75	312	45	70.38	64.43	120.80	34.43	20.62	1.31	1.31
	D4N,D5N	53	2871	68.5	6.47	0.75	624	45	55.90	72.29	120.80	32.13	19.24	1.40	1.40
		53	1111	68.5	4.03	0.75	312	45	86.53	58.10	120.80	36.20	21.68	1.24	1.24
	D6N,D7N	55	2181	61.2	5.87	0.75	606	45	50.40	76.13	120.80	30.97	18.54	1.45	1.45
		55	863	61.2	3.76	0.75	303	45	79.77	60.52	120.80	35.54	21.28	1.27	1.27
	D8N,D9N	74	2051	49.1	6.46	0.75	604	45	68.47	70.09	120.80	32.78	19.63	1.37	1.37
		74	854	49.1	4.17	0.75	302	45	99.04	54.31	120.80	37.21	22.28	1.21	1.21
	D10N,D11N	75	3132	66.8	6.85	0.75	610	45	65.44	66.81	120.80	33.75	20.21	1.33	1.33
		75	1281	66.8	4.38	0.75	305	45	107.08	52.24	120.80	37.74	22.60	1.19	1.19
	D12N,D13N	84	2857	62.2	6.78	0.75	610	45	64.11	67.50	120.80	33.54	20.09	1.34	1.34
		84	1140	62.2	4.28	0.75	305	45	102.33	53.43	120.80	37.43	22.42	1.20	1.20
	D14N,D17N	76	1668	41.7	6.32	0.75	490	45	86.52	58.11	120.80	36.20	21.67	1.24	1.24
		76	659	41.7	3.98	0.75	245	45	136.74	46.22	120.80	39.21	23.48	1.15	1.15
	D18N,D19N	78	967	25.6	6.15	0.75	490	45	81.71	59.79	120.80	35.74	21.40	1.26	1.26
		78	350	25.6	3.70	0.75	245	45	118.29	49.70	120.80	38.38	22.98	1.17	1.17
	D20N,D21N	79	642	17.9	5.99	0.75	490	45	77.58	61.36	120.80	36.30	21.14	1.27	1.27
		79	107	17.9	2.44	0.75	245	45	51.72	75.16	120.80	31.27	18.72	1.44	1.44
Verticals	LN2-NU2	85	724	20.0	6.02	0.75	504	45	74.01	62.83	120.80	34.89	20.89	1.29	1.29
	LN4-NU4	52	2935	32.0	9.58	0.75	504	45	167.53	38.47	120.80	40.70	24.37	1.11	1.11
	LM6,MN6,NU6	54	4103	47.7	9.27	0.75	504	45	175.67	40.76	120.80	40.43	24.21	1.11	1.11
	LM8,MN8,NU8	55	2631	29.0	9.52	0.75	504	45	185.49	39.69	120.80	40.66	24.34	1.11	1.11
	LM10,MN10,NU10	57	7019	61.5	10.68	0.75	504	45	233.35	35.38	120.80	41.51	24.86	1.08	1.08
			2011	61.5	5.72	0.75	198	45	433.19	25.97	120.80	43.09	25.80	1.04	1.04
	LM12,MN12,NU12	58	3341	40.7	9.06	0.75	504	45	167.84	41.72	120.80	40.22	24.09	1.12	1.12
	LM14,MN14,NU14	59	1746	19.9	9.37	0.75	428	45	249.34	34.23	120.80	41.73	24.99	1.08	1.08
		59	591	19.9	5.45	0.75	198	45	393.43	27.25	120.80	42.90	25.69	1.05	1.05
	LN16, NU16	60	2833	34.6	9.08	0.75	351	45	345.66	29.07	120.80	42.61	25.52	1.06	1.06
		60	885	34.6	5.06	0.75	198	45	338.85	29.36	120.80	42.57	25.49	1.06	1.06
	LN18, NU18	59	1746	19.9	9.37	0.75	351	45	369.87	28.10	120.80	42.77	25.61	1.05	1.05
		59	591	19.9	5.45	0.75	198	45	393.43	27.25	120.80	42.90	25.69	1.05	1.05
	LN20, NU20	61	1746	19.9	9.37	0.75	351	45	369.87	28.10	120.80	42.77	25.61	1.05	1.05
		61	591	19.9	5.45	0.75	198	45	393.43	27.25	120.80	42.90	25.69	1.05	1.05
Transverse Frame	TR10,RP10,PU10	92	3280	75.0	6.61	0.75	520	45	84.01	58.97	120.80	35.98	21.53	1.25	1.25
			1247	75.0	4.08	0.75	205	45	205.51	37.70	120.80	41.08	24.59	1.10	1.10
	TR8,RP8,PU8	91	2538	59.4	6.54	0.75	520	45	82.07	59.66	120.80	35.77	21.42	1.26	1.26
			980	59.4	4.06	0.75	205	45	203.89	37.85	120.80	41.03	24.57	1.10	1.10
Top Bracings		30	30	12.0	1.57	0.75	265	45	18.30	126.33	120.80	16.05	9.61	2.80	2.80
		37	3301	44.4	8.62	0.75	384	45	261.62	33.42	120.80	41.87	25.07	1.07	1.07

Note: Carbon steel : Fy = 33 Ksi
Silicon steel Fy = 45 Ksi. used 45 ksi conservative

FOR PINNED JOINT - NO BENDING STRESSES

x:\s1986\calce\grid-vbio\[pipe and member buckling(aisc2005).xls]Lined Jells
By: JKH
Version: 4.0 Date: 4/7/2009 By: YO Chkd: 0 Apvd: 0

Pipe and Member Buckling (AISC2005)
Units: k, in
Pile Printed: 12/07/12

Compressive Strength for Flexural Buckling of Members without Slender Elements

$$Case(a) \quad \frac{kl}{r} \le 4.71\sqrt{\frac{E}{F_y}} \qquad F_{cr} = [0.658^{\frac{F_y}{F_e}}]F_y \qquad [E3-2]$$

$$Case(b) \quad \frac{kl}{r} > 4.71\sqrt{\frac{E}{F_y}} \qquad F_{cr} = 0.877F_e \qquad [E3-3]$$

$$F_e = \frac{\pi^2 E}{(\frac{kl}{r})^2} \qquad [E3-4]$$

$$F_a = \frac{F_{cr}}{\Omega}$$

$$\omega = \frac{aF_y}{F_a}$$

E 29000 ksi
a 0.60 AISC (1/1.67 for AISC, 0.67 for FEM)
Ω 1.67

Member	Incidences	Sect.	I in^4	A in^2	r in	k	Length in	Fy ksi	Fe ksi	kl/r	4.71(E/Fy)^0.5	Fcr ksi	Fa ksi	Omega Calc	Omega Used
Lower Chord	L0N-L3N	10	3463	41.7	9.11	1	372	45	175.32	40.82	120.80	40.42	24.20	1.11	1.11
	U4N-L5N	11	6978	83.5	9.14	1	368	45	180.06	40.28	120.80	40.53	24.27	1.11	1.11
	L10N-L11N	13	10275	126.4	9.02	1	344	45	200.60	38.15	120.80	40.97	24.53	1.10	1.10
	L12N-L15N	14	5738	66.9	9.33	1	362	45	205.30	37.72	120.80	41.06	24.58	1.10	1.10
Upper Chord	U0N-U1N	20	3397	44.8	8.71	1	368	45	163.57	42.26	120.80	40.11	24.02	1.12	1.12
	U2N-U5N	21	5672	71.1	8.85	1	368	45	168.99	41.56	120.80	40.25	24.10	1.12	1.12
	U6N-U9N	22	8899	109.1	9.03	1	336	45	211.07	37.20	120.80	41.18	24.65	1.09	1.09
	U10N-U13N	23	7590	94.4	8.97	1	344	45	198.48	38.36	120.80	40.93	24.51	1.10	1.10
	U14N-U17N	24	5140	67.8	8.70	1	344	45	187.05	39.52	120.80	40.69	24.36	1.11	1.11
	U18N-U22N	25	3184	43.7	8.54	1	344	45	179.91	40.30	120.80	40.53	24.27	1.11	1.11
Diagonals	D0N,D1N	90	2013	39.0	7.18	1	536	45	52.49	74.61	120.80	31.43	18.82	1.43	1.43
		90	455	39.0	3.42	1	256	45	47.45	78.46	120.80	30.28	18.12	1.49	1.49
	D2N,D3N	91	2077	63.0	5.74	1	624	45	24.74	108.88	120.80	21.01	12.58	2.14	2.14
		91	831	63.0	3.63	1	312	45	39.59	85.91	120.80	27.96	16.74	1.61	1.61
	D4N,D5N	93	2871	68.5	6.47	1	624	45	31.45	96.39	120.80	24.72	14.80	1.82	1.82
		93	1111	68.5	4.03	1	312	45	49.67	77.47	120.80	30.56	18.30	1.47	1.47
	D6N,D7N	95	2181	61.2	5.97	1	606	45	28.35	101.51	120.80	23.16	13.87	1.94	1.94
		95	863	61.2	3.76	1	303	45	44.87	80.69	120.80	29.57	17.71	1.52	1.52
	D8N,D9N	74	2051	49.1	6.46	1	604	45	33.45	93.45	120.80	25.63	15.34	1.76	1.76
		74	854	49.1	4.17	1	302	45	55.71	72.41	120.80	32.09	19.22	1.40	1.40
	D10N,D11N	75	3132	65.8	6.85	1	610	45	36.81	89.09	120.80	26.98	16.15	1.67	1.67
		75	1281	65.8	4.38	1	305	45	60.22	69.65	120.80	32.91	19.71	1.37	1.37
	D12N,D13N	94	2857	62.2	6.78	1	610	45	36.06	90.01	120.80	28.69	15.98	1.69	1.69
		94	1140	62.2	4.28	1	305	45	57.96	71.24	120.80	32.44	19.43	1.39	1.39
	D14N,D17N	76	1668	41.7	6.32	1	490	45	49.67	77.46	120.80	30.58	18.30	1.47	1.47
		76	659	41.7	3.98	1	245	45	78.91	61.63	120.80	35.23	21.09	1.28	1.28
	D18N,D19N	78	957	25.6	6.15	1	490	45	45.96	79.73	120.80	29.87	17.88	1.51	1.51
		78	360	25.6	3.70	1	245	45	66.54	68.26	120.80	33.91	20.30	1.33	1.33
	D20N,D21N	79	642	17.9	5.99	1	490	45	43.64	81.82	120.80	29.23	17.50	1.54	1.54
		79	107	17.9	2.44	1	245	45	29.09	100.21	120.80	23.66	14.10	1.91	1.91
Verticals	LN2-NU2	85	724	20.0	6.02	1	504	45	41.83	83.77	120.80	28.62	17.14	1.57	1.57
	LN4-NU4	52	2938	32.0	9.58	1	504	45	105.48	52.63	120.80	37.64	22.54	1.20	1.20
	LM6,MN6,NU6	54	4103	47.7	9.27	1	504	45	98.93	54.34	120.80	37.20	22.27	1.21	1.21
	LM8,MN8,NU8	56	2531	26.0	9.52	1	504	45	104.34	52.91	120.80	37.57	22.50	1.20	1.20
	LM10,MN10,NU10	57	7019	61.5	10.88	1	504	45	133.28	47.18	120.80	38.88	23.34	1.15	1.15
			2011	61.5	5.72	1	198	45	243.67	34.63	120.80	41.65	24.94	1.08	1.08
	LM12,MN12,NU12	58	3341	40.7	9.06	1	504	45	94.41	55.63	120.80	36.86	22.07	1.22	1.22
	LM14,MN14,NU14	59	1746	19.9	9.37	1	428	45	140.25	45.64	120.80	39.35	23.56	1.14	1.14
		59	591	19.9	5.45	1	198	45	221.31	36.33	120.80	41.33	24.75	1.09	1.09
	LN16, NU16	60	2633	34.6	9.08	1	351	45	194.44	38.76	120.80	40.85	24.46	1.10	1.10
		60	665	34.6	5.06	1	198	45	150.60	39.15	120.80	40.77	24.41	1.10	1.10
	LN18, NU18	59	1746	19.9	9.37	1	351	45	208.05	37.47	120.80	41.11	24.61	1.09	1.09
		59	591	19.9	5.45	1	198	45	221.31	36.33	120.80	41.33	24.75	1.09	1.09
	LN20, NU20	61	1746	19.9	9.37	1	351	45	208.05	37.47	120.80	41.11	24.61	1.09	1.09
		61	591	19.9	5.45	1	198	45	221.31	36.33	120.80	41.33	24.75	1.09	1.09
Transverse Frame															
	TR10,RP10,PU10	92	3280	75.0	6.61	1	520	45	47.26	78.63	120.80	30.21	18.09	1.49	1.49
			1247	75.0	4.08	1	205	45	115.60	50.27	120.80	38.23	22.89	1.18	1.18
	TR6,RP6,PU6	93	2538	58.4	6.54	1	520	45	48.16	79.55	120.80	29.92	17.92	1.50	1.50
			980	58.4	4.08	1	205	45	114.69	50.47	120.80	38.18	22.87	1.18	1.18
Top Bracings		30	30	12.0	1.57	1	240	33	12.58	152.55	141.06	11.01	6.59	3.00	3.00
		37	3301	44.4	8.62	1	384	45	147.16	44.55	120.80	39.59	23.71	1.14	1.14

4-1-8
Member Stress Analysis

STRESS Program

The program STRESS/FATIGUE in LSAP is used to perform the stress calculations. For symmetric cranes, only the near side of the crane is considered as the program generates forces and stresses accounting for the reversal of lateral loads and the variation in the wind direction.

STRESS uses the following information:

1. LSAP Member and Joint Names
2. Stress magnification factors for frame buckling
3. Section property number as used in PROPS.DAT and LSAP
4. Basic allowable stress
5. Names of data files containing lists of section properties and load combinations

STRESS generates member forces and stresses for the load cases resulting in maximum absolute and compression stress (printed in *.SFO), maximum shear stress (printed in *.SVO), and minimum required weld sizes (printed in *.SWO).

STRESS also generates a stress interaction ratio defined as follows:

Inter. = $(\omega * f_x + u_y * f_{by} + u_z * f_{bz})/(F_a * LFact)$

= ratio of effective stress to allowable stress

ω = factor for axial stress magnification due to frame buckling (see *Pipe and Member Buckling (AISC 2005) for factors*), maximum of ωy and ωz is used

f_x = stress due to axial load in member

u_y, u_z = factors for local-y and local-z bending load in member

F_a = Basic allowable (bending) stress

LFact = Stress factor for overload and stowed combinations

Method

Two stress analyses are performed: stresses with “fixed” and “pinned” truss connections. Stresses for “pinned” truss connection analysis are determined by using large section moduli for the members, which are shown in the alternate section properties file (PROPS1.DAT). Basic allowable stresses have been increased by 20% when calculated stresses include secondary stresses due to joint rigidity, i.e. modeling truss joints as fixed connections. Refer to Section 4.1.1 – Analysis Summary.

Contents

Pages 2.9.1 - 2.9.6 – BOOM0.SFO – stresses with “fixed” truss connection analysis
Pages 2.9.7 - 2.9.12 – BOOM1.SFO – stresses with “pinned” truss connection analysis
Pages 2.9.13 - 2.9.17 – Alternate “pinned” section properties file (PROPS1.DAT)

STRESS/FATIGUE Summary Output
STRESS
*1LES=S968BOOM
COMB=COMB0.DAT
EXT=OUO
IL=0.2

PROPS=PROPS.DAT

STRESS INTERACTIONS

INCLUDES BENDING STRESSES

Note: Allowable stress Int = 1.20

(TRUSS JOINTS MODELED AS FIXED CONN)

M	J	SN	OMy	OMz	FA	DETL	STRESS INTERACT LC	P	fmax	Pmax	
:							LOWER CHORD NS				
L0N	L0N	10	1.11	1.11	19.8	F2K2	5W		0.59	0.59	
L0N	L1N	10					5W		0.69	0.69	
L1N	L1N	10					5W		0.67	0.67	
L1N	L2N	10					5W		0.45	0.45	
L2N	L2N	10					5W		0.46	0.46	
L2N	L3N	10					5W		0.53	0.53	
L3N	L3N	10					5W		0.52	0.52	
L3N	L4N	10					5W		0.45	0.44	
L4N	L4N	11			27.0		5W		0.60	0.60	
L4N	L5N	11					5EZ		0.85	0.85	
L5N	L5N	11					5EZ		0.85	0.85	
L5N	L6LN	11					5EZ		1.19	1.19**	< 1.20 OK
L6N	L6N	1	1.00	1.00	19.8		5W		0.20	0.14	
L6N	L7N	1					5W		0.14	0.10	
L7N	L7N	1					5W		0.14	0.10	
L7N	L8W	1					5EZ		0.08	0.08	
L8N	L8N	1					5W		0.09	0.09	
L8N	L9N	1					5W		0.08	0.05	
L9N	L9N	1					5W		0.08	0.05	
L9N	L10N	1					5W		0.18	0.02	
L10N	L10N	13	1.10	1.10	27.0		5W		0.96	0.85	
L10N	L11N	13					5W		0.53	0.48	
L11N	L11N	13					5W		0.53	0.48	
L11N	L12N	13					5W		0.33	0.28	
L12N	L12N	14					5W		0.34	0.34	
L12N	L13N	14					5W		0.28	0.25	
L13N	L13N	14					5W		0.28	0.25	
L13N	L14N	14					5W		0.32	0.31	
L14N	L14N	14					5W		0.33	0.33	
L14N	L15N	14					5W		0.29	0.29	
L15N	L15N	14					5W		0.29	0.29	
L15N	L16N	14					5W		0.31	0.30	
L16N	L16N	15			19.8		5W		0.28	0.28	
L16N	L17N	15					5W		0.18	0.18	
L17N	L17N	15					5W		0.16	0.15	
L17N	L18N	15					5W		0.20	0.20	
L18N	L18N	15					5W		0.28	0.28	
L18N	L19N	15					5W		0.17	0.17	
L19N	L19N	15					5W		0.20	0.20	
L19N	L20N	15					5W		0.20	0.19	
L20N	L20N	16					5W		0.28	0.02	
L20N	L21N	16					5W		0.20	0.03	
L21N	L21N	16					5W		0.06	0.06	
L21N	L22N	16					5W		0.09	0.07	
:							LOWER CHORD FS				
L0F	L0F	10	1.11	1.11	19.8	F2K2	5W		0.62	0.51	
L0F	L1F	10					5W		0.76	0.65	
L1F	L1F	10					5W		0.69	0.69	
L1F	L2F	10					5W		0.48	0.48	
L2F	L2F	10					5W		0.47	0.47	
L2F	L3F	10					5W		0.53	0.53	
L3F	L3F	10					5W		0.52	0.52	
L3F	L4F	10					5W		0.44	0.44	
L4F	L4F	11			27.0		5W		0.60	0.60	
L4F	L5F	11					5EZ		0.86	0.86	
L5F	L5F	11					5EZ		0.87	0.87	
L5F	L6LF	11					5EZ		1.20	1.20**	= 1.20 OK
L6F	L6F	1	1.00	1.00	19.8		5EZ		0.26	0.26	
L6F	L7F	1					5W		0.19	0.19	
L7F	L7F	1					5W		0.19	0.19	
L7F	L8F	1					5W		0.16	0.16	
L8F	L8F	1					5W		0.14	0.07	
L8F	L9F	1					5W		0.07	0.07	

WIND LOAD GOVERNS. ORTHOGONAL EQ RUN. ANGLED EQ'S DO NOT CONTROL BY INSP.

M	J	SN	OMy	OMz	FA	DETL	LC	P	fmax	Pmax
L9F	L9F	1					5W		0.07	0.07
L9F	L10F	1					5W		0.22	0.21
L10F	L10F	13	1.10	1.10	27.0		5W		0.85	0.77
L10F	L11F	13					5W		0.46	0.45
L11F	L11F	13					5W		0.46	0.45
L11F	L12F	13					5W		0.39	0.32
L12F	L12F	14					5W		0.30	0.30
L12F	L13F	14					5W		0.30	0.26
L13F	L13F	14					5W		0.30	0.26
L13F	L14F	14					5W		0.33	0.32
L14F	L14F	14					5W		0.34	0.33
L14F	L15F	14					5W		0.29	0.29
L15F	L15F	14					5W		0.29	0.29
L15F	L16F	14					5W		0.31	0.30
L16F	L16F	15			19.8		5W		0.28	0.28
L16F	L17F	15					5W		0.18	0.18
L17F	L17F	15					5W		0.15	0.15
L17F	L18F	15					5W		0.20	0.20
L18F	L18F	15					5W		0.28	0.28
L18F	L19F	15					5W		0.17	0.17
L19F	L19F	15					5W		0.20	0.20
L19F	L20F	15					5W		0.20	0.19
L20F	L20F	16					5W		0.28	0.03
L20F	L21F	16					5W		0.20	0.03
L21F	L21F	16					5W		0.06	0.06
L21F	L22F	16					5W		0.09	0.07
:							UPPER CHORD NS			
U0N	U0N	20	1.12	1.12	19.8		5W		0.42	0.38
U0N	U1LN						5W		0.98	0.62
U1LN	U1LN						5W		0.16	0.08
U1LN	U1N						5W		0.04	0.01
U1N	U1N	20					5W		0.05	0.01
U1N	U2N	20					5W		0.06	0.05
U2N	U2N	21	1.12	1.12	27.0		5W		0.51	0.12
U2N	U3N	21					5W		0.40	0.22
U3N	U3N	21					5W		0.40	0.22
U3N	U4N	21					5W		0.37	0.22
U4N	U4N	21					5W		0.46	0.22
U4N	U5N	21					5W		0.48	0.22
U5N	U5N	21					5W		0.48	0.22
U5N	U6N	21					5W		0.68	0.10
U6N	U6N	22	1.09	1.09	27.0		5W		0.61	0.09
U6N	U7N	22					5W		0.48	0.15
U7N	U7N	22					5W		0.48	0.15
U7N	U8N	22					5W		0.46	0.16
U8N	U8N	22					5W		0.48	0.17
U8N	U9N	22					5W		0.53	0.07
U9N	U9N	22					5W		0.53	0.07
U9N	U10N	22					5W		0.56	0.08
U10N	U10N	23	1.10	1.10	27.0		5W		0.52	0.09
U10N	U11N	23					5W		0.41	0.02
U11N	U11N	23					5W		0.41	0.02
U11N	U12N	23					5W		0.43	0.00
U12N	U12N	23					5W		0.37	0.01
U12N	U13N	23					5W		0.41	0.03
U13N	U13N	23					5W		0.41	0.03
U13N	U14N	23					5W		0.35	0.00
U14N	U14N	24	1.11	1.11	27.0		5W		0.28	0.03
U14N	U15N	24					5W		0.24	0.03
U15N	U15N	24					5W		0.24	0.03
U15N	U16N	24					5W		0.27	0.02
U16N	U16N	24					5W		0.21	0.07
U16N	U17N	24					5W		0.26	0.03
U17N	U17N	24					5W		0.26	0.03
U17N	U18N	24					5W		0.22	0.04
U18N	U18N	25	1.11	1.11	19.8		5W		0.15	0.09
U18N	U19N	25					5W		0.15	0.04
U19N	U19N	25					5W		0.15	0.04
U19N	U20N	25					5W		0.14	0.01
U20N	U20N	25					5W		0.06	0.00
U20N	U21N	25					5W		0.09	0.02
U21N	U21N	25					5W		0.09	0.02
U21N	U22N	25					5W		0.11	0.02
:							UPPER CHORD FS			

← MODEL APPROXIMATION

ACTUAL STRESS INT. LOWER

M	J	SN	OMy	OMz	FA	DETL	LC	P	fmax	Pmax
JGF	U0F	20	1.12	1.12	19.8		5W		0.44	0.39
JGF	U1LF						5W		1.00	0.66**
U1LF	U1LF						5W		0.09	0.03
U1LF	U1F						5W		0.08	0.03
U1F	U1F	20					5W		0.08	0.03
U1F	U2F	20					5W		0.08	0.07
U2F	U2F	21	1.12	1.12	27.0		5W		0.51	0.12
U2F	U3F	21					5W		0.41	0.22
U3F	U3F	21					5W		0.41	0.22
U3F	U4F	21					5W		0.37	0.22
U4F	U4F	21					5W		0.46	0.22
U4F	U5F	21					5W		0.48	0.22
U5F	U5F	21					5W		0.48	0.22
U5F	U6F	21					5W		0.69	0.11
U6F	U6F	22	1.09	1.09	27.0		5W		0.62	0.09
U6F	U7F	22					5W		0.48	0.15
U7F	U7F	22					5W		0.48	0.15
U7F	U8F	22					5W		0.46	0.16
U8F	U8F	22					5W		0.48	0.17
U8F	U9F	22					5W		0.53	0.07
U9F	U9F	22					5W		0.53	0.07
U9F	U10F	22					5W		0.57	0.10
U10F	U10F	23	1.10	1.10	27.0		5W		0.53	0.12
U10F	U11F	23					5W		0.43	0.05
U11F	U11F	23					5W		0.43	0.05
U11F	U12F	23					5W		0.43	0.00
U12F	U12F	23					5W		0.36	0.01
U12F	U13F	23					5W		0.41	0.03
U13F	U13F	23					5W		0.41	0.03
U13F	U14F	23					5W		0.35	0.00
U14F	U14F	24	1.11	1.11	27.0		5W		0.29	0.03
U14F	U15F	24					5W		0.24	0.03
U15F	U15F	24					5W		0.24	0.03
U15F	U16F	24					5W		0.27	0.02
U16F	U16F	24					5W		0.21	0.07
U16F	U17F	24					5W		0.26	0.03
U17F	U17F	24					5W		0.26	0.03
U17F	U18F	24					5W		0.22	0.04
U18F	U18F	25	1.11	1.11	19.8		5W		0.15	0.09
U18F	U19F	25					5W		0.15	0.04
U19F	U19F	25					5W		0.15	0.04
U19F	U20F	25					5W		0.14	0.01
U20F	U20F	25					5W		0.06	0.00
U20F	U21F	25					5W		0.09	0.02
U21F	U21F	25					5W		0.09	0.02
U21F	U22F	25					5W		0.11	0.02
:							DIAGONAL NS			
D0N	L0N	80	1.25	1.25	27.0		5W		0.48	0.26
D0N	N1N	80					5W		0.43	0.34
D1N	N1N	80					5W		0.43	0.36
D1N	U2N	80					5W		0.47	0.32
D2N	U2N	51	1.53	1.53			5EZ		0.65	0.65
D2N	N3N	51					5EZ		0.63	0.63
D3N	N3N	51					5EZ		0.66	0.66
D3N	L4N	51					5EZ		0.60	0.60
D4N	L4N	53	1.40	1.40			5EZ		0.56	0.35
D4N	N5N	53					5EZ		0.48	0.43
D5N	N5N	53					5W		0.45	0.37
D5N	U6N	53					5W		0.52	0.28
D6N	U6N	55	1.45	1.45			5W		0.46	0.06
D6N	N7N	55					5W		0.33	0.03
D7N	N7N	55					5W		0.35	0.04
D7N	L8N	55					5W		0.56	0.08
D8N	L8N	74	1.37	1.37			5W		0.60	0.59
D8N	N9N	74					5W		0.55	0.55
D9N	N9N	74					5W		0.54	0.54
D9N	U10N	74					5W		0.52	0.52
D10N	U10N	75	1.33	1.33			5W		0.31	0.20
D10N	N11N	75					5W		0.32	0.19
D11N	N11N	75					5W		0.33	0.20
D11N	L12N	75					5W		0.39	0.12
D12N	L12N	84	1.34	1.34			5W		0.30	0.30
D12N	N13N	84					5W		0.34	0.34
D13N	N13N	84					5W		0.34	0.34

<1.20 OK

M	J	SN	OMy	OMz	FA	DETL	LC	P	fmax	Pmax
D13N	U14N	84					5W		0.29	0.29
D14N	U14N	76	1.24	1.24			5W		0.31	0.02
D14N	N15N	76					5W		0.27	0.06
D15N	N15N	76					5W		0.26	0.07
D15N	L16N	76					5W		0.28	0.01
D16N	L16N	76					5W		0.31	0.31
D16N	N17N	76					5W		0.34	0.34
D17N	N17N	76					5W		0.33	0.33
D17N	U18N	76					5W		0.28	0.28
D18N	U18N	78	1.20	1.20			5W		0.30	0.09
D18N	N19N	78					5W		0.23	0.12
D19N	N19N	78					5W		0.24	0.13
D19N	L20N	78					5W		0.28	0.04
D20N	L20N	79	1.26	1.26	19.8		5W		0.35	0.35
D20N	N21N	79					5W		0.30	0.30
D21N	N21N	79					5W		0.31	0.31
D21N	U22N	79					5W		0.27	0.26
:						DIAGONAL FS				
D0F	L0F	80	1.25	1.25	27.0		5W		0.51	0.27
D0F	N1F	80					5W		0.44	0.36
D1F	N1F	80					5W		0.45	0.34
D1F	U2F	80					5W		0.48	0.31
D2F	U2F	51	1.53	1.53			5EZ		0.67	0.67
D2F	N3F	51					5EZ		0.65	0.65
D3F	N3F	51					5EZ		0.68	0.68
D3F	L4F	51					5EZ		0.62	0.62
D4F	L4F	53	1.40	1.40			5EZ		0.57	0.36
D4F	N5F	53					5EZ		0.49	0.45
D5F	N5F	53					5W		0.45	0.38
D5F	U6F	53					5EX		0.53	0.34
U6F	U6F	55	1.45	1.45			5W		0.47	0.06
D6F	N7F	55					5W		0.33	0.03
D7F	N7F	55					5W		0.35	0.04
D7F	L8F	55					5W		0.56	0.08
D8F	L8F	74	1.37	1.37			5W		0.60	0.60
D8F	N9F	74					5W		0.55	0.55
D9F	N9F	74					5W		0.54	0.54
D9F	U10F	74					5W		0.52	0.52
D10F	U10F	75	1.33	1.33			5W		0.33	0.20
D10F	N11F	75					5W		0.31	0.20
D11F	N11F	75					5W		0.31	0.20
D11F	L12F	75					5W		0.43	0.06
D12F	L12F	84	1.34	1.34			5W		0.33	0.33
D12F	N13F	84					5W		0.35	0.35
D13F	N13F	84					5W		0.34	0.34
D13F	U14F	84					5W		0.29	0.29
D14F	U14F	76	1.24	1.24			5W		0.31	0.02
D14F	N15F	76					5W		0.27	0.06
D15F	N15F	76					5W		0.26	0.07
D15F	L16F	76					5W		0.28	0.01
D16F	L16F	76					5W		0.31	0.31
D16F	N17F	76					5W		0.34	0.34
D17F	N17F	76					5W		0.33	0.33
D17F	U18F	76					5W		0.28	0.28
D18F	U18F	78	1.20	1.20			5W		0.30	0.09
D18F	N19F	78					5W		0.23	0.12
D19F	N19F	78					5W		0.24	0.13
D19F	L20F	78					5W		0.28	0.04
D20F	L20F	79	1.26	1.26	19.8		5W		0.35	0.35
D20F	N21F	79					5W		0.30	0.30
D21F	N21F	79					5W		0.31	0.31
D21F	U22F	79					5W		0.27	0.26
:					VERTICALS					
LN0	L0N	50	1.00	1.00	19.8		5W		0.22	0.22
LN0	N0N	50					5W		0.18	0.17
NU0	N0N	50					5W		0.18	0.17
NU0	U0N	50					5W		0.23	0.22
LN2	L2N	85	1.29	1.29	27.0		5W		0.22	0.02
LN2	N2N	85					5EX		0.11	0.07
NU2	N2N	85					5EX		0.11	0.07
NU2	U2N	85					5W		0.22	0.00
LN4	L4N	52	1.11	1.11			5W		0.15	0.15
LN4	N4N	52					5W		0.07	0.07
NU4	N4N	52					5W		0.07	0.07

N	J	SN	OMy	OMz	FA	DETL	LC	P	fmax	Pmax	
NU4	U4N	52					5W		0.14	0.14	
LM6	L6N	54	1.11	1.11			5W		1.22	1.22**	≃ 1.20 ok
LM6	M6N	54					5W		1.08	1.08**	< 1.20 ok.
MN6	M6N	54					5W		1.10	1.10**	
MN6	N6N	54					5W		0.87	0.87	
NU6	N6N	54					5W		0.84	0.84	
NU6	U6N	54					5W		0.79	0.79	
LM8	L8N	56	1.11	1.11	19.8		5W		0.40	0.40	
LM8	M8N	56					5W		0.27	0.27	
MN8	M8N	56					5W		0.70	0.70	
NU8	U8N	56					5W		0.33	0.33	
NU8	N8N	56					5W		0.37	0.37	
LM10	M10N	57	1.08	1.08	27.0		5W		0.29	0.28	
LM10	L10N	57					5W		0.39	0.38	
MN10	N10N	57					5W		0.32	0.32	
MN10	M10N	57					5W		0.46	0.45	
NU10	U10N	57					5W		0.32	0.32	
NU10	N10N	57					5W		0.30	0.30	
LM12	M12N	58	1.12	1.12			5W		0.09	0.09	
LM12	L12N	58					5W		0.13	0.13	
MN12	N12N	58					5W		0.09	0.09	
MN12	M12N	58					5W		0.09	0.08	
NU12	U12N	58					5EZ		0.10	0.10	
NU12	N12N	58					5W		0.09	0.09	
LM14	M14N	59	1.08	1.08			5W		0.07	0.03	
LM14	L14N	59					5W		0.11	0.06	
MN14	N14N	59					5W		0.07	0.04	
MN14	M14N	59					5W		0.13	0.02	
NU14	U14N	59					5W		0.16	0.07	
NU14	N14N	59					5W		0.07	0.04	
LN16	N16N	60	1.06	1.06			5W		0.08	0.06	
LN16	L16N	60					5W		0.14	0.14	
NU16	U16N	60					5W		0.11	0.11	
NU16	N16N	60					5N		0.08	0.06	
LN18	N18N	59	1.05	1.05			5W		0.04	0.02	
LN18	L18N	59					5W		0.17	0.06	
NU18	U18N	59					5W		0.18	0.11	
NU18	N18N	59					5W		0.04	0.02	
LN20	N20N	61	1.05	1.05	19.8		5W		0.16	0.14	
LN20	L20N	61					5W		0.19	0.13	
NU20	U20N	61					5W		0.19	0.17	
NU20	N20N	61					5W		0.16	0.14	
LN22	N22N	59					5W		0.09	0.09	
LN22	L22N	59					5W		0.07	0.07	
NU22	U22N	59					5W		0.14	0.12	
NU22	N22N	59					5W		0.10	0.10	
;					TRANSVERSE	FRAME					
TR6	T6N	91	1.25	1.25	19.8		5W		0.58	0.52	
TR6	R6N	91					5EX		0.55	0.55	
RP6	R6N	91					5W		0.88	0.70	
RP6	P6N	91					5W		0.65	0.65	
PU6	P6N	91					5W		0.65	0.65	
PU6	U6N	91					5W		0.57	0.57	
TR10	T10N	92	1.26	1.26	19.8		5W		1.17	1.17**	< 1.20 ok
TR10	R10N	92					5W		1.19	1.19**	
RP10	R10N	92					5W		0.67	0.51	
RP10	P10N	92					5W		0.33	0.31	
PU10	P10N	92					7W		0.30	0.33	
PU10	U10N	92					5W		0.26	0.27	
;					TOP BRACINGS						
U0X	U0N	30	2.80	2.80	19.8		5W		0.14	0.21	
U0X	U2F	30					5W		0.14	0.22	
U1X	U0F	30					7W		0.11	0.20	
U1X	U2N	30					7W		0.12	0.20	
U2X	U2N	30					5W		0.50	0.24	
U2X	U4F	30					5W		0.42	0.13	
U3X	U2F	30					5W		0.54	0.18	
U3X	U4N	30					5W		0.44	0.06	
U4X	U4N	30					5W		0.50	0.29	
U4X	U6F	30					5W		0.65	0.39	
U5X	U4F	30					5W		0.53	0.22	
U5X	U6N	30					5W		0.68	0.33	
U6X	U6N	30					5W		0.47	0.11	
U6X	U8F	30					5W		0.33	0.01	

M	J	SN	OMy	OMz	FA	DETL	LC	P	fmax	Pmax
U7X	U6F	30					5W		0.48	0.10
U7X	U8N	30					5W		0.34	0.00
U8X	U8N	30					5W		0.32	0.02
U8X	U10F	30					5W		0.35	0.01
U9X	U8F	30					5W		0.33	0.02
U9X	U10N	30					5W		0.35	0.02
U10X	U10N	30					7W		0.36	0.74
U10X	U12F	30					7W		0.44	0.71
U11X	U10F	30					7W		0.37	0.73
U11X	U12N	30					7W		0.43	0.71
U12X	U12N	30					7W		0.45	0.87
U12X	U14F	30					7W		0.48	0.90
U13X	U12F	30					7W		0.45	0.87
U13X	U14N	30					7W		0.48	0.90
U14X	U14N	30					7W		0.38	0.74
U14X	U16F	30					7W		0.38	0.73
U15X	U14F	30					7W		0.38	0.74
U15X	U16N	30					7W		0.38	0.73
U16X	U16N	30					7W		0.25	0.43
U16X	U18F	30					7W		0.27	0.44
U17X	U16F	30					7W		0.25	0.43
U17X	U18N	30					7W		0.27	0.44
U18X	U18N	30					5W		0.36	0.36
U18X	U20F	30					7W		0.18	0.33
U19X	U18F	30					5W		0.36	0.36
U19X	U20N	30					7W		0.18	0.33
U20X	U20N	30					5W		0.22	0.22
U20X	U22F	30					7W		0.19	0.19
U21X	U20F	30					5W		0.22	0.22
U21X	U22N	30					7W		0.19	0.19
			TOP STRUT							
H0N	U0N	31	1.07	1.07	19.8		5W		0.19	0.04
H0F	U0F	31					5W		0.18	0.05
H2N	U2N	32					5W		0.13	0.08
H2F	U2F	32					5W		0.13	0.09
H4N	U4N	33					5W		0.19	0.11
H4F	U4F	33					5W		0.19	0.11
H6N	U6N	34					5W		0.21	0.17
H6F	U6F	34					5W		0.21	0.16
H8N	U8N	35					5W		0.14	0.14
H8F	U8F	35					5W		0.14	0.14
H10N	U10N	36					5W		0.16	0.16
H10F	U10F	36					5W		0.16	0.16
H12N	U12N	37					5W		0.18	0.18
H12F	U12F	37					5W		0.18	0.18
H14N	U14N	38					5W		0.17	0.17
H14F	U14F	38					5W		0.17	0.17
H16N	U16N	39					5W		0.13	0.13
H16F	U16F	39					5W		0.13	0.13
H18N	U18N	40					5W		0.09	0.09
H18F	U18F	40					5W		0.09	0.09
H20N	U20N	41					5W		0.04	0.04
H20F	U20F	41					5W		0.04	0.04
H22N	U22N	42					5W		0.08	0.08
H22F	U22F	42					5W		0.08	0.08

LIFTECH STRESS/FATIGUE VERSION 6.0.9
Running Date 12/29/2012
Starting Time 11:17:17 AM
Ending Time 11:17:25 AM
Elapsed Time 00:00:08

4-1-9
Selected Truss Connection Evaluation

Truss Connection Check - Required Rivets

Grid File L:\S1968\Calcs\Grids-Visio\[TrussConnections 2 mj.xlsx]Sheet1

Data File: \\moe\s1968\s1968\calcs\las\boom0.csv 12/19/2012 14:25

Single Shear

1" Dia. Rivet Capacity (k) 11.8 k

Label on Dwgs	Member	Joint	Comb	MIN P Px	Comb	MAX P Px	Reqd Rivets	Actual Rivets
	Lower Chord							
	L0N	L0N	7W	139.4	5W	291.0	25	not evaluated
	L3N	L4N	5W	-298.7	7W	-109.1	26	81
	L4N	L4N	7W	540.5	5W	1140.1	97	>100
	L5N	L6LN	5W	-1140.4	7W	-540.8	97	98
	L10N	L10N	7W	397.6	5W	844.6	72	112
	L11N	L12N	5W	-844.5	7W	-397.4	72	84
	L12N	L12N	7W	206.2	5W	395.0	34	166
	L15N	L16N	5W	-389.5	7W	-201.7	34	88
	L16N	L16N	7W	11.0	5W	134.6	12	96
	L19N	L20N	5W	-114.4	7W	-56.2	10	>35
	L20N	L20N	5W	-28.4	7W	-3.2	3	20
	L21N	L22N	5W	-3.0	7W	2.9	1	>1
	Upper Chord							
	U0N	U0N	7W	-2.5	5W	28.1	3	not evaluated
	U1N	U2N	7W	-3.6	5W	31.8	3	not evaluated
	U2N	U2N	5W	-675.3	7W	-257.2	58	not evaluated
	U5N	U6N	7W	227.6	5W	813.0	70	110
	U6N	U6N	5W	-1302.6	7W	-204.8	111	>111
	U9N	U10N	7W	148.9	5W	1339.7	114	236
	U10N	U10N	5W	-990.2	7W	134.1	85	89
	U13N	U14N	7W	-43.0	5W	864.3	74	98
	U14N	U14N	5W	-433.3	7W	12.4	37	61
	U17N	U18N	7W	51.4	5W	354.2	31	>>31
	U18N	U18N	5W	-70.3	7W	8.4	6	>49
	U21N	U22N	7W	8.9	5W	42.2	4	>>4

∴ MORE RIVETS THAN REQ'D AT ALL TRUSS CONNECTIONS

Truss Connection Check - Required Rivets

Grid File L:\S1968\Calcs\Grids-Visio\[TrussConnections 2 mj.xlsx]Sheet1

Data File: \\moe\s1968\s1968\calcs\las\boom0.csv 12/19/2012 14:25

Single Shear

1" Dia. Rivet Capacity (k) 11.8 k

Label on Dwgs	Member	Joint	Comb	MIN P Px	Comb	MAX P Px	Reqd Rivets	Actual Rivets
	Diagonals							
L0U2	D0N	L0N	5W	-420.0	7W	-207.7	36	56
	D1N	U2N	7W	216.9	5W	436.5	38	64
U2L4	D2N	U2N	8Z	320.8	5EZ	593.2	51	80
	D3N	L4N	5EZ	-653.7	8Z	-354.0	56	88
L4U6	D4N	L4N	5EZ	-843.3	8Z	-457.8	72	100
	D5N	U6N	7W	408.6	5W	809.1	69	112
U6L8	D6N	U6N	5W	-484.7	7W	9.4	42	112
	D7N	L8N	7W	-20.5	5W	487.2	42	112
L8U10	D8N	L8N	7W	-7.8	5W	457.8	39	112
	D9N	U10N	5W	-427.2	7W	18.3	37	112
U10L12	D10N	U10N	5W	-498.2	7W	-240.2	43	120
	D11N	L12N	7W	253.4	5W	504.1	43	120
L12U14	D12N	L12N	7W	82.0	5W	311.9	27	108
	D13N	U14N	5W	-283.9	7W	-71.8	25	104
U14L16	D14N	U14N	5W	-249.4	7W	-44.0	22	84
	D15N	L16N	7W	42.0	5W	239.4	21	84
L16U18	D16N	L16N	7W	97.6	5W	233.7	20	80
	D17N	U18N	5W	-212.7	7W	-90.3	19	72
U18L20	D18N	U18N	5W	-145.0	7W	-59.1	13	48
	D19N	L20N	7W	58.5	5W	141.6	13	48
L20U22	D20N	L20N	7W	28.0	5W	61.4	6	20
	D21N	U22N	5W	-50.7	7W	-22.5	5	20
	Verticals							
L0U0	LN0	L0N	7W	42.6	5W	106.6	10	55
	NU0	U0N	5W	-100.5	7W	-38.9	9	7.4
L2U2	LN2	L2N	5W	-46.5	7W	-25.4	4	18
	NU2	U2N	8X	27.8	5EX	50.8	5	28
L4U4	LN4	L4N	7W	10.4	5W	55.0	5	36
	NU4	U4N	5W	-47.4	7W	-5.9	5	36
L6U6	LM6	L6N	7W	181.8	5W	889.7	76	104
	NU6	U6N	5W	-823.8	7W	-154.7	70	100
L8U8	LM8	L8N	7W	16.3	5W	83.0	8	44
	NU8	U8N	5W	-59.0	7W	-20.8	6	44
L10U10	LM10	L10N	7W	40.8	5W	337.0	29	128
	NU10	U10N	5W	-282.3	7W	-52.1	24	152
L12U12	LM12	L12N	7W	20.7	5W	69.6	6	68
	NU12	U12N	5W	-41.9	7W	-14.1	4	>>4
L14U14	LM14	L14N	5W	-10.8	7W	-3.1	1	>>1
	NU14	U14N	7W	-3.0	5W	21.7	2	>>2
L16U16	LN16	L16N	7W	16.5	5W	45.4	4	>>4
	NU16	U16N	5W	-39.3	7W	-13.1	4	>>4
L18U18	LN18	L18N	5W	-17.2	7W	0.2	2	>>2
	NU18	U18N	7W	1.8	5W	20.8	2	>>2
L20U20	LN20	L20N	7W	20.6	5W	38.8	4	>>4
	NU20	U20N	5W	-35.3	7W	-18.5	3	>>3
L22U22	LN22	L22N	7W	-1.1	5W	11.4	1	>>1
	NU22	U22N	5W	-8.0	7W	3.2	1	>>1

Truss Connection Check - Required Rivets

Grid File L:\S1968\Calcs\Grids-Visio\[TrussConnections 2 mj.xlsx]s1968-calcs-las-boom0

Data File: \\moe\s1968\s1968\calcs\las\boom0.csv 12/19/2012 14:25

Single Shear

1" Dia. Rivet Capacity (k) 11.8 k

Label on Dwgs	Member	Joint	Comb	MIN P Px	Comb	MAX P Px	Reqd Rivets	Actual Rivets
	Transverse Frame at 6 and 10							
TB41	PU6	U6N	5W	-475.6	7W	-141.3	41	88
	TR6	T6N	7W	65.0	5W	313.0	27	72
TB57	PU10	U10N	5W	-285.4	7W	226.5	25	120
	TR10	T10N	7W	-220.9	5W	361.1	31	112

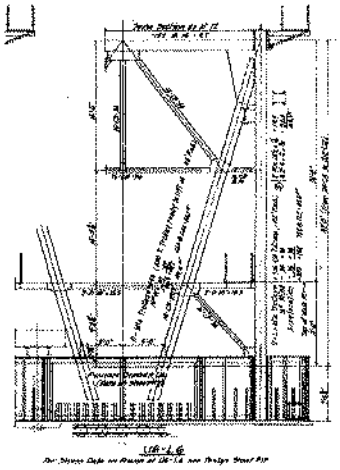

LSAP Member PU6

LSAP Member TR6

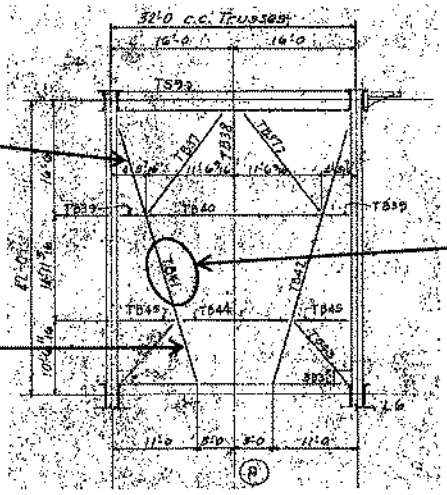

Dwg Label TB41

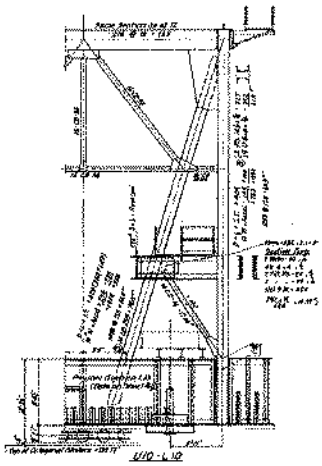

LSAP Member PU10

LSAP Member TR10

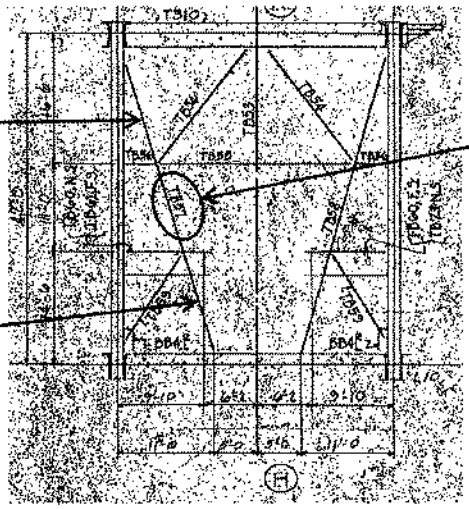

Dwg Label TB57

4-1-10
Roller Loads

Max Front Roller Loads

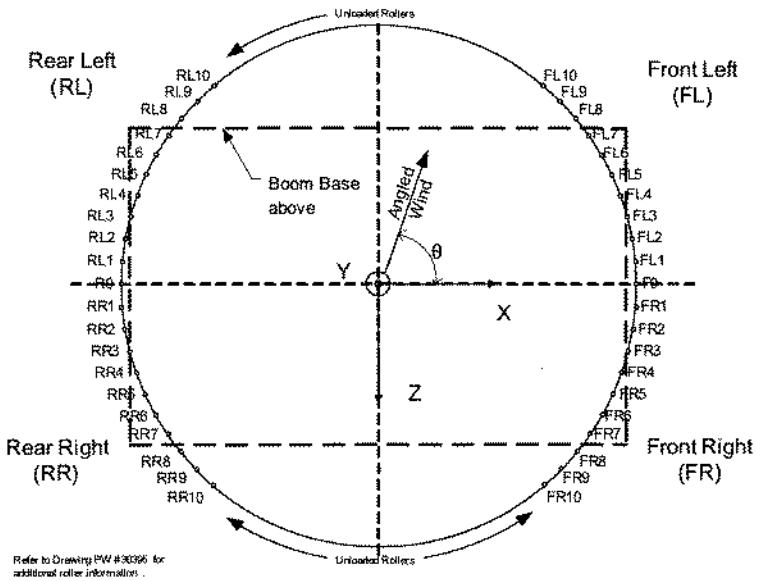

Max Front Roller Forces

Max Front Roller
Liftech - DL + WL<
(Boom-Tower Interface Report Sht C2)

Front Left Quadrant (FL) ; Load Case 5W asd

	DLY	WLX	WLZ	Sum	American Bridge (AB) Case I	Case II	Case III	Liftech/ Max AB
					(Dwg PW#36395)			
FL0	37.89	5.90	0.00	**43.8**	191.1	189.5	58.9	0.23
FL1	38.74	5.19	-1.58	**44.2**	190.9	190.6	62.8	0.23
FL2	38.93	5.14	-3.16	**45.0**	190.0	191.0	66.9	0.24
FL3	39.11	5.09	-4.71	**46.0**	188.8	191.1	71.0	0.24
FL4	39.29	5.05	-6.24	**47.3**	187.1	190.6	75.2	0.25
FL5	39.46	5.01	-7.73	**48.7**	184.9	189.7	79.6	0.26
FL6	39.62	4.98	-9.17	**50.0**	182.3	188.2	84.0	0.27
FL7	39.76	4.95	-10.55	**51.4**	179.1	186.2	88.5	0.28
FL8	39.90	4.93	-11.87	**52.7**	175.7	183.9	92.9	0.29
FL9	40.02	4.91	-13.11	**54.0**	171.7	181.0	97.3	0.30
FL10	40.13	4.90	-14.28	**55.2**	167.3	177.6	101.7	0.31

Sum = DLY + Angled Wind

Case I: 10# Longitudinal wind
Case II: 10# Transvere Leeward wind
Case III: 30# Transverse Leeward wind

X:\S1968\Calcs\Grids-Visio\[Copy of Roller Loads 05 mj.xlsx]Sheet1

Verification: Liftech Roller Loads are less than the American Bridge (AB) calculated loads.

The AB calculated stresses, due to the operating conditions, in the girders are low. Therefore, the mothballed wheel loads meet the project criteria.

Max Rear Roller Loads

Refer to calcs on Pw#36397

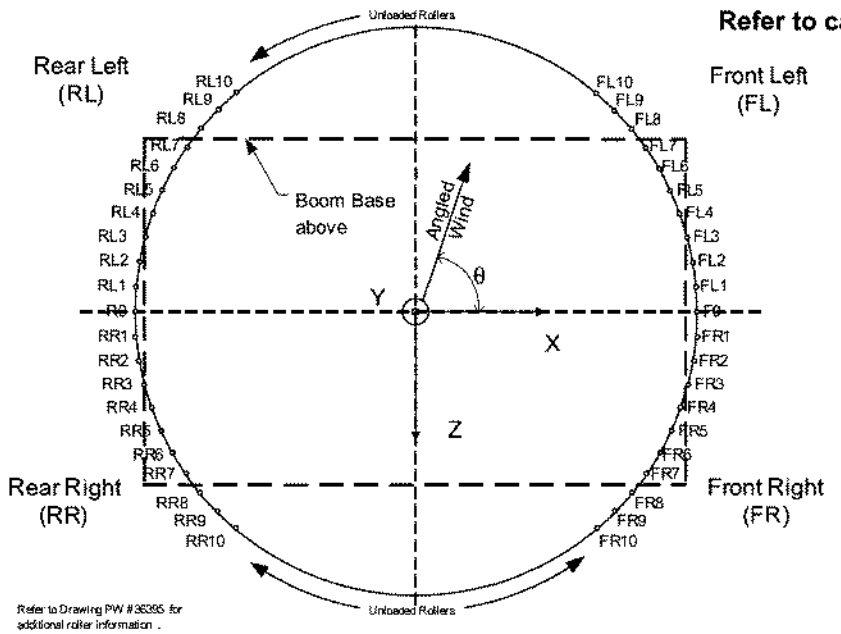

Rear Roller Forces

Max Rear Rollers

Liftech - DL + WL<

(Boom-Tower Interface Report Sht C1.)

Rear Left Quardrant ; Load Case 5W asd

Roller No.	DLY	WLX	WLZ	Sum
RL0	131.9	-5.9	0.0	**137.8**
RL1	131.3	-5.2	-5.3	**138.7**
RL2	131.4	-5.1	-10.6	**143.2**
RL3	131.5	-5.1	-15.8	**148.1**
RL4	131.6	-5.0	-20.9	**153.1**
RL5	131.7	-5.0	-25.9	**158.1**
RL6	131.7	-5.0	-30.8	**162.9**
RL7	131.8	-4.9	-35.4	**167.6**
RL8	131.9	-4.9	-39.8	**172.1**
RL9	132.0	-4.9	-44.0	**176.3**
RL10	132.1	-4.9	-47.9	**180.3**

Sum = DLY + Angled Wind

X:\S1968\Calcs\Grids-Visio\[Copy of Roller Loads 05 mj.xlsx]Sheet1

American Bridge (AB)

30# Transverse Leeward Wind

(Dwg PW#36395)

Roller No.	Rear Case III	Front Case I	Front Case II	Liftech/ Max AB
0	117.5	191.1	189.5	0.72
1	121.2	190.9	190.6	0.73
2	124.7	190.0	191.0	0.75
3	128.0	188.8	191.1	0.77
4	131.0	187.1	190.6	0.80
5	133.8	184.9	189.7	0.83
6	136.2	182.3	188.2	0.87
7	138.5	179.1	186.2	0.90
8	140.3	175.7	183.9	0.94
9	141.9	171.7	181.0	0.97
10	143.1	167.3	177.6	1.02 See note

Front roller forces shown because L6 (Rear) and L10 (Front) design is the same – See PW#36396 (Sh 11) and 36397 (sht 12)

Note: AB's calculated stress on the front girder is 10.65 ksi (allowable = 16 ksi) see following sheets. Therefore rear girder is ok for stowed condition stress.

4-1-11
Tread & Pinion Girder Evaluations

Ref. Drawing Sht PW#36396 (Sht 11)

Boom – Pinion Girders

American Bridge Calculations

PINION GIRDER AT L10

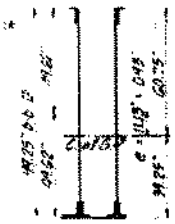

	A	y	Ay	Ay^2	I_o	Less holes A	Less holes Ay^2
Top Flge. 2 PL 8 x 4 x ½	16.0	+46.67	+709	33,090	110	3.4	7,410
Web 2 Pls 44 x ½	44.0	0	0	0	50,840	24.7	20,920
* 3 L 8 x 4 x ½	25*	-46.80	-1,158	54,410	160	7.6	16,650
* 1 L 8 x 8 x ½	7	47.47	581	27,580	75	3.4	7,660
Bott Flge. 1 Pl 24½ x ½	12.1	-50.00	-1,105	55,250		3.9	14,790
* Deduct 20 x ½	-2.5	-49.69	+124	-6,090		-0.7	-1,730
	172.2		-1,417	268,270		44.3	64,960
			A_{et}	21,300			5,890
				226,930			59,070

$e = \frac{1417}{172.2} = 11.13"$ (-0.93)

* Outstanding Leg of bottom L planed to ½" thick.

(Dist. to extreme fiber)
Top 49.62 + 11.13 = 60.75
Bott. 50.38 - 11.13 = 39.25

I =	226,930 gross	59,070	= 167,860 net
Area =	172.2 gross	44.3	= 127.9 net
Section Modulus Top	3735 gross		2757 net
Section Modulus Bott	5782 gross		4266 net

LOCKED POSITION, 30# WIND

Stresses at Point X on side with Spud Lock

Axial Stress	On side of point X toward Spud Lock		On side of point X toward ℄	
Vert. Loads DL			+ .65	+ .65
Wind Load	+ .266*	- .266	+ .111	- .111
	+ .266*	- .266*	+ .176*	- .46*
Moment	①	②	③	④
Spud Lock + Lateral Thrust DL	+ .287'*	- .287	+ .164	.43 (e 0.93)
From Vert. Load	+ .243	+ .243	+ .243	+ .243
" Wind	- 2.694	+ 2.694	- 2.694	+ 2.694
Total	- 2.204'*	+ 2.648'*	- 2.287'*	+ 2.898'*
Top Flange Stress				
Sect. Mod.	2757 net	3735 gr.	2757 net	3735 gr.
Bending Unit Str.	- 9.60	+ 8.66	- 9.96	+ 9.28
Axial " "	+ 2.08	1.54	+ 1.38	- .027
Total (kips per □")	- 7.52	+ 7.10	- 8.58	+ 9.01
Bottom Flge. Stress				
Sect. Mod.	5782 gr.	4266 net	5782 gr.	4266 net
Bending Unit Str.	+ 4.58	- 7.65	+ 4.75	- 8.13
Axial " "	+ 1.54	- 2.08	+ 1.02	- 0.36
Total (kips per □")	+ 6.12	- 9.73	+ 5.77	- 8.49

Wind as shown. - opp. hand.

10# WIND, 350 TON TROLLEY OPERATING

Axial Stress	On side of point X toward pinion		On side of point X toward ℄	
350 T Lift			+ .216	+ .216
10# Wind	- .108	+ .108	- .47	+ .47
Total	- .108*	+ .108*	+ .169*	+ .263*
Moment	①	②	③	④
Pinion + Lateral Thrusts DL + LL	- .101'*	+ .101	+ .157	+ .245 (e 0.93)
From Vert. Loads	+ .705	+ .705	+ .705	+ .705
" Wind	+ 10.39	- 10.39	+ 10.39	- 10.39
Total	+ 16.83'*	- .193'*	+ 19.41'*	- .49'*
Top Flange Stress				
Sect. Mod.	3735 gr.	3735 gr.	3735 gr.	3735 gr.
Bending Unit Stress	+ 5.40	- .063	+ 6.26	- 0.16
Axial " "	- 0.63	+ 0.63	+ 0.98	+ 1.53
Total (kips per □")	+ 4.77	0.	+ 7.22	+ 1.37
Bottom Flange Stress				
Sect. Mod.	4266 net	5782 gr.	4266 net	5782 gr.
Bending Unit Stress	- 4.73	+ 0.40	.565	+ 0.11
Axial " "	- 0.85	+ 0.63	+ 1.32	+ 1.53
Total (kips per □")	- 5.58	+ 1.03	+ 1.13	+ 1.64
Local Stress from pinion	- 5.07			
	-10.65	(16.0 permissible)		

Col. ① & Col. ③ - Wind as shown.
Col. ② & Col. ④ - opp. hand.

Maximum calculated girder stresses due to operating and stowed loading conditions at the Pinion Girder at L10 (Front).

10.65 ksi vs. 16.0 ksi allowable

Ref. Drawing Sht PW#36397 (Sht 12)

Boom – Pinion Girders

American Bridge Calculations

PINION GIRDER AT L6

Same Section as Pinion Girder at L10, on Sheet Nº 11.

Area = 172.2 □"gr. = 127.9 □" net

Section Modulus

Top	3735 gr.	2757 net
Bott.	5782 gr.	4266 net

(See Sheet Nº 11)

CASE II + 10# WIND + ACCELERATION

	Stresses at X: on side of point X toward pinion		Stresses at X: on side of point X toward ℄		Stresses at A	
Axial Stress						
Vertical Load D.L.	0	0	+ 155	+ 155	0	0
Wind Load	+ 59	- 59	+ 41	- 41	+ 59	- 59
	+ 59k	- 59k	+ 196k	+ 114k	+ 59k	- 59k
Moment						
From Axial Stress (e = .093)	+ .55'k	- .55	+ 1.82	+ 106	+ .55	- .55
From Vertical Forces D.L.	+ 541	+ 541	- 541	- 541	- 425	- 425
From Wind	- 490	+ 490	- 490	+ 490	- 490	+ 490
Total	+ 106'k	+ 976'k	+ 233'k	+ 1137'k	- 810'k	- 40'k
Top Flange Stress						
Sect Mod.	3735	3735	3735	3735	2757	2757
Bending Unit Stress	+ 0.34	+ 3.13	+ 0.75	+ 1.32	- 3.52	- 0.17
Axial Unit Stress	+ 0.34	- 0.34	+ 1.16	+ 0.50	+ 0.56	- 0.46
Total (kips per □")	+ 0.68	+ 2.79	+ 1.91	+ 1.82	- 2.96	- 0.63
Bottom Flange Stress						
Sect Mod	5782	4266	5782	4266	5782	4266
Bending Unit Stress	- 0.22	- 2.74	- 0.48	- 3.00	+ 1.68	+ 0.11
Axial Unit Stress	+ 0.34	- 0.46	+ 1.14	+ 0.89	+ 0.34	- 0.46
Total (kips per □")	+ 0.12	- 3.20	+ 0.66	- 2.11	+ 2.02	- 0.35
Local Bending Stress from horiz. mom. of pinion force (Sh #11)		- 5.07				
Combined Stress does not exceed		- 8.27 k/□"				

(16.0 permissible)

Maximum calculated stress in Pinion Girder at L6 (Rear). 8.27 ksi vs 16.0 allowable.

Design is the same as the Front Pinion Girder. See design stresses on previous page.

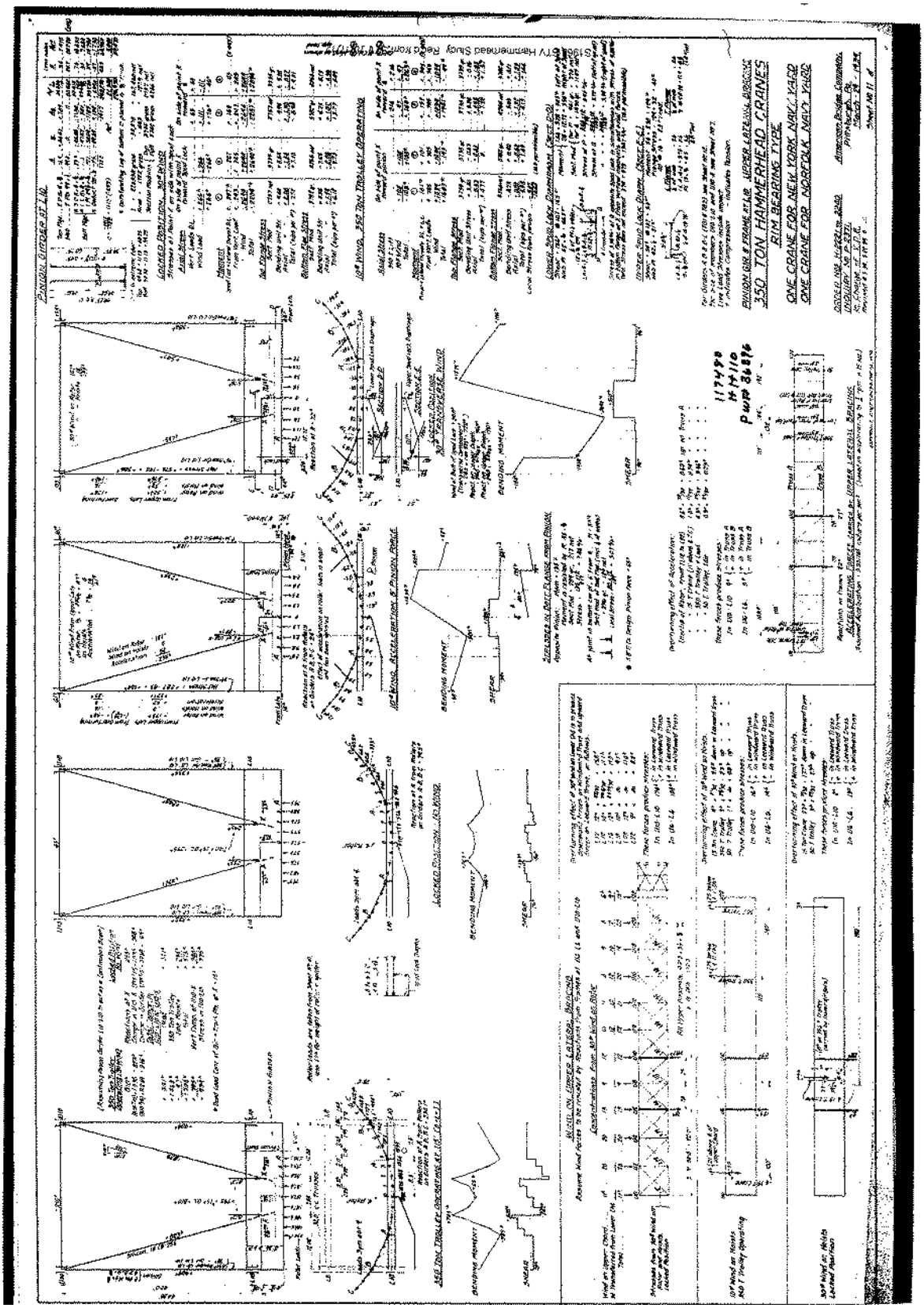
350 TON HAMMERHEAD CRANES
RIM BEARING TYPE
ONE CRANE FOR NEW YORK NAVY YARD
ONE CRANE FOR NORFOLK NAVY YARD

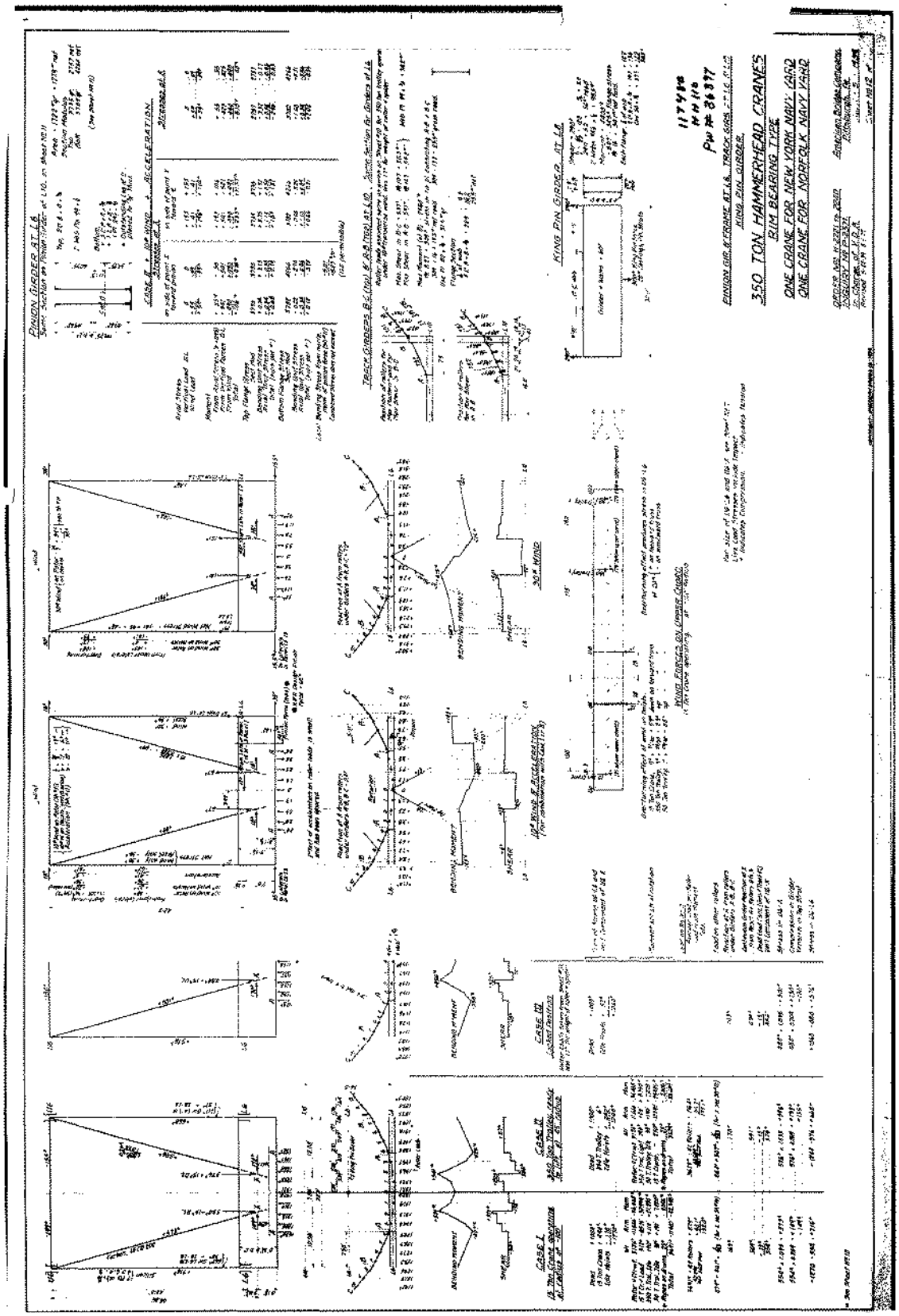
PINION GIRDER AT L6
TRACK GIRDERS, R.H. (OR) L.H. AT L10
KING PIN GIRDER AT L6
350 TON HAMMERHEAD CRANES
RIM BEARING TYPE
ONE CRANE FOR NEW YORK NAVY YARD
ONE CRANE FOR NORFOLK NAVY YARD

4-1-12
Spud Lock Assembly Evaluation

Boom – Spud Lock & King Pin Assemblies

Arrangement

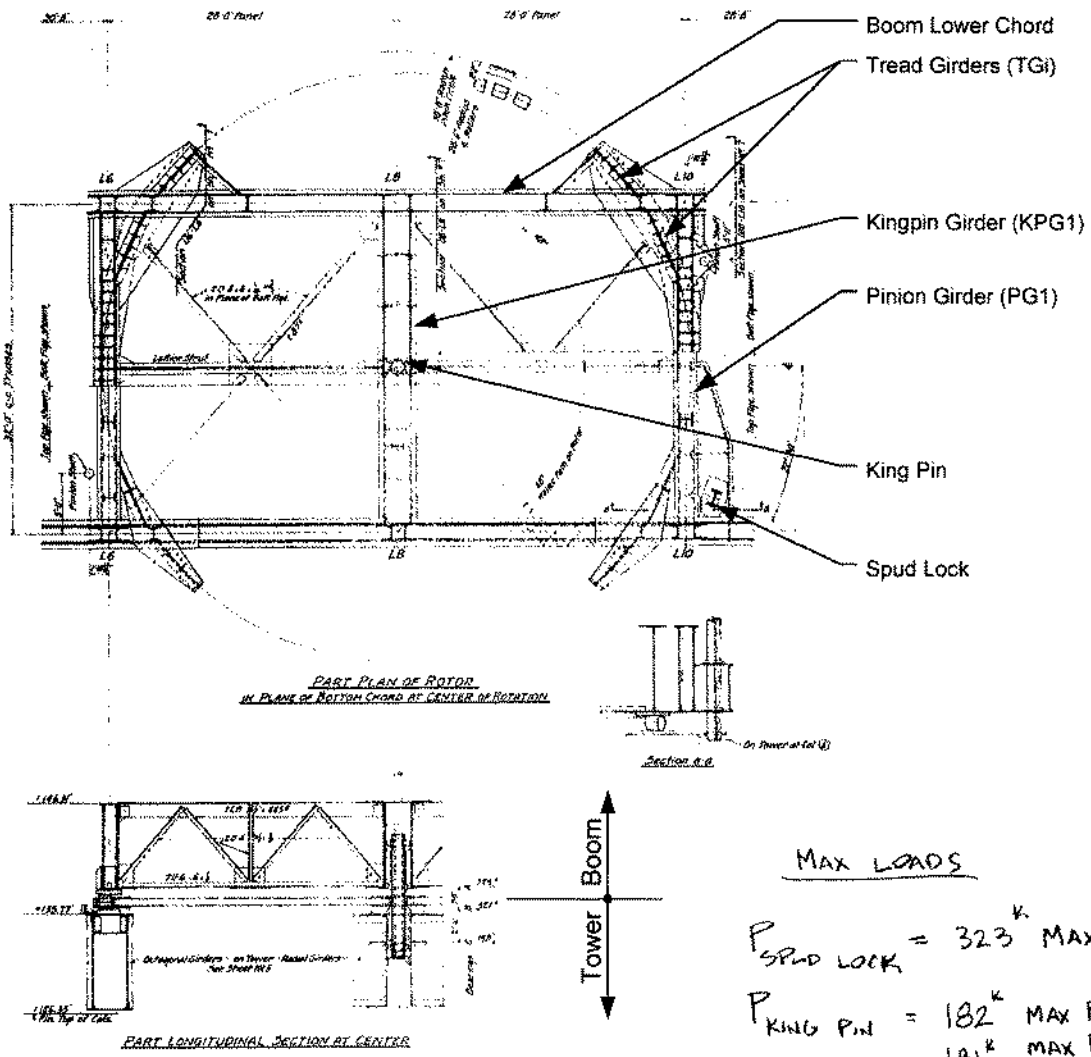

MAX LOADS

$P_{SPUD\ LOCK} = 323^{K}$ MAX.

$P_{KING\ PIN} = 182^{K}$ MAX PIN FORCE

181^{K} MAX P_x

41^{K} MAX P_z

SEE NEXT PAGE

WIND LOAD $\quad WLX = 135^k \quad \Sigma WLZ = 2\Sigma WLX, \quad W = WLZ.$

$WLZ = 256^k.$

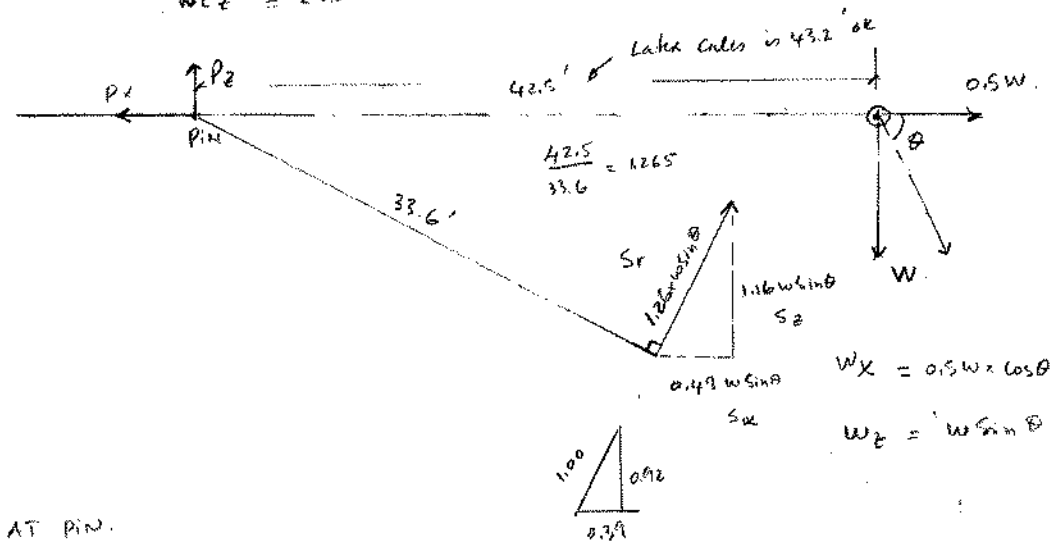

$W_X = 0.5W \times \cos\theta$

$W_Z = W \sin\theta$

AT PIN.

$P_X = 0.5w\cos\theta + 0.49w\sin\theta$

$S = 1.26 \times w\sin\theta.$

$P_Z = 1.16w\sin\theta - w\sin\theta = 0.16w\sin\theta.$

$P_r = \sqrt{P_X^2 + P_Z^2}$ max @ $\theta = 46°$ See Grid next sht.

$P_X = w(0.5\cos 46° + 0.49\sin 46°) = 256 \times 0.70 = 180^k.$

$P_Z = 256 \; 0.16 \times \sin 46° = 29.5^k$

$\boxed{P_r = 182^k. \leftarrow \text{MAX } P_r \text{ LOAD}}$

MAX P_X LOAD

$\frac{dP_X}{d\theta} = .5w(-\sin\theta + \cos\theta)$

$\hookrightarrow \theta = 45°$

MAX $P_X = 256^k \times (0.5 \times \cos 45 + 0.49 \times \sin 45)$

$= \underline{181^k}$

MAX P_Z LOAD

$\theta = 90°$

MAX $P_Z = 0.16 \times 256 \times \sin 90°$

$= \underline{41^k}$

AT SPUDLOCK : S_r is max @ $\theta = 90°$

$S_r = 1.26 \times 256 = \boxed{323^k \text{ MAX SPUD LOCK LOAD}}$

$S_X = 126^k$

$S_Z = 297^k.$

Boom – Spud Lock

Spud Lock Beam

Pinion Girder (PG1); See Section D-D on Sht PW36430 (Sht 9AB)

Pinion Girder (PG1); See Bottom Section on Sht PW36420 (Sht 9B)

Spud Lock Beam

Tower Structure

Boom – Spud Lock

Pinion Girder at Spud Lock

Ref. Sht PW#42877 (Sht D6)

Boom – Spud Lock

Pinion Girder at Spud Lock

P = 323^K

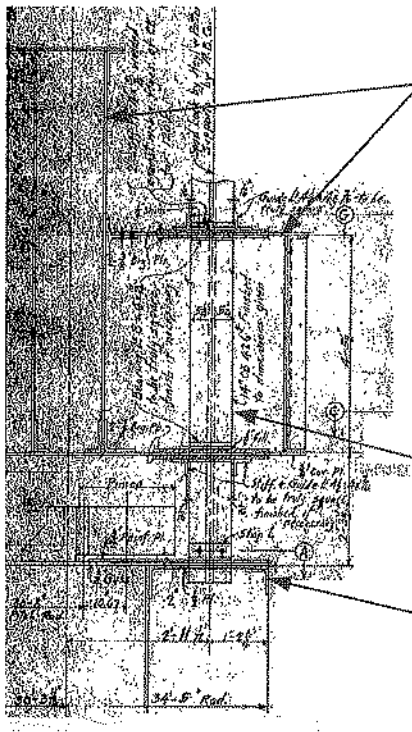

SECTION B-B

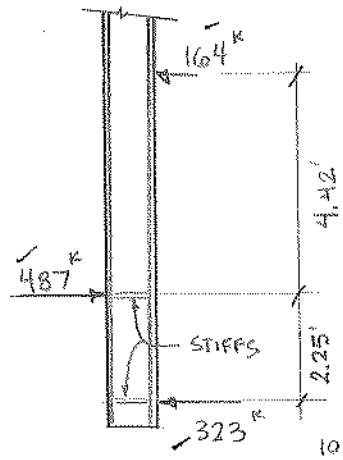

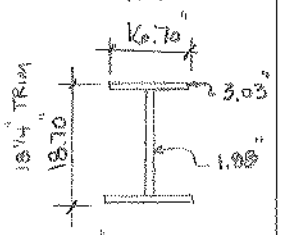

14" CB426#
(CB146)

A = 125.30 in^2

S_x = 707.5 in^3

w/o TRIM

SEE NEXT PG.

SPUD LOCK BEAM

$f_v = \frac{323^K}{1.88" \times 18.25"}$

= 9.4 ksi < 13.2 OK

$f_b = \frac{323^K \times 2.25' \times 12}{707.5 \text{ in}^3}$ ← APPROX. (w/o TRIM)

= 12.0 ksi → TRIM OK. BY INSPECTION.

STIFFENERS ARE PROVIDED AT BEARING LOCATIONS.

14" COLUMNS

REFERENCES; SEE COLUMN (1) AND PAGE 4

7	11	8	9	13	14
H14e 14X16	C1928	B14f 14X16	B14f 14X16	CB146, 14X16	CB146, 14X16
H14d 14X16	C1929	B14e 14X16	B14e 14X16	CB145, 14X14 ½	CB145, 14X14 ½
H14 14X14 ½	C1930	B14d 14X14 ½	B14d 14X14 ½	CB144, 14X12	CB144, 14X12
H14a 14X12	12	B14c 14X12	B14c 14X12	CB143, 14X10	CB143, 14X10
H14b 14X10	C1931	B14b 14X10	B14b 14X10	CB142, 14X8	CB142, 14X8
S40-1931	15	B14a 14X8	B14a 14X8	C1933	CIL1946
H14c 14X8	ILI934	S43-1933	S54-1946	C1934	CIL1948
S40-1931		S47-1934	S56-1948	CIL1940	US1950
		S51-1938			
		S53-1943			

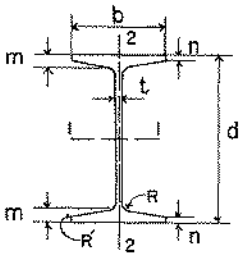

SECT. NO. OR NOM. SIZE	COL. (1)	WEIGHT PER FOOT Lb.	AREA Sq.In.	DEPTH d In.	FLANGE WIDTH b In.	WEB THICK t In.	DIMENSIONS m In.	n In.	R In.	R' In.	SLOPE INSIDE FLANGE %	AXIS 1—1 I In.⁴	S In.³	r In.	AXIS 2—2 I In.⁴	S In.³	r In.
H14d 7 14X16		426.0	125.34	18.690	16.700	1.880	3.033	3.033	.60	0	0	6613.0	707.6	7.26	2361.7	282.8	4.34
CB146N12 14X16		426.0	125.30	18.690	16.699	1.879	3.033	3.033	.65	0	0	6611.4	707.5	7.26	2361.2	282.8	4.34
14WF 14X16	8,9,13,14,15	426.0	125.25	18.690	16.695	1.875	3.033	3.033	.60	0	0	6610.3	707.4	7.26	2359.5	282.7	4.34
CB146 11 14X15		425.0	124.99	18.510	16.506	1.912	3.060	3.060	.65	0	0	6420.5	693.7	7.17	2301.0	278.8	4.29
CB146N12 14X16		412.0	121.16	18.500	16.647	1.827	2.938	2.938	.65	0	0	6309.7	682.1	7.22	2265.7	272.2	4.32
14WF 14X16	7,8,13,15	412.0	121.15	18.500	16.645	1.825	2.938	2.938	.60	0	0	6309.7	682.1	7.22	2264.9	272.1	4.32
CB146 11 14X15		405.0	119.2	18.246	16.423	1.829	2.928	2.928	.65	0	0	6010.5	658.8	7.10	2168.2	264.0	4.27
H14d 7 14X16		398.0	117.08	18.310	16.595	1.775	2.843	2.843	.60	0	0	6016.3	657.2	7.17	2171.7	261.7	4.31
CB146N12 14X16		398.0	117.05	18.310	16.595	1.775	2.843	2.843	.65	0	0	6015.2	657.0	7.17	2171.7	261.7	4.31
14WF 14X16	8,9,13,14,15	398.0	116.98	18.310	16.590	1.770	2.843	2.843	.60	0	0	6013.7	656.9	7.17	2169.7	261.6	4.31
CB146 11 14X16		385.0	113.22	17.978	16.340	1.746	2.794	2.794	.65	0	0	5609.4	624.0	7.04	2037.4	249.4	4.24
14WF 14X16	7,8,13,15	384.0	112.93	18.120	16.540	1.720	2.748	2.748	.60	0	0	5727.5	632.2	7.12	2078.1	251.3	4.29
CB146N12 14X16		384.0	112.92	18.120	16.541	1.721	2.748	2.748	.65	0	0	5726.9	632.1	7.12	2078.4	251.3	4.29
H14d 7 14X16		370.0	108.87	17.940	16.480	1.660	2.658	2.658	.60	0	0	5456.6	608.3	7.08	1987.9	241.2	4.27
CB146N12 14X16		370.0	108.83	17.940	16.479	1.659	2.658	2.658	.65	0	0	5455.1	608.2	7.08	1987.5	241.2	4.27
14WF 14X16	8,9,13,14,15	370.0	108.78	17.940	16.475	1.655	2.658	2.658	.60	0	0	5454.2	608.1	7.08	1986.0	241.1	4.27
CB146 11 14X15		365.0	107.34	17.710	16.255	1.661	2.660	2.660	.65	0	0	5221.4	589.7	6.97	1909.1	234.9	4.22
CB146N12 14X16		356.0	104.68	17.750	16.422	1.602	2.563	2.563	.65	0	0	5179.3	583.6	7.03	1896.4	231.0	4.26
14WF 14X16	7,8,13,15	356.0	104.68	17.750	16.420	1.600	2.563	2.563	.60	0	0	5179.4	583.6	7.03	1895.7	230.9	4.26
CB146 11 14X15		345.0	101.47	17.438	16.172	1.578	2.524	2.524	.65	0	0	4843.4	555.5	6.91	1783.5	220.6	4.19
14WF 14X16	7,8,9,13,14,15	342.0	100.59	17.560	16.365	1.545	2.468	2.468	.60	0	0	4911.5	559.4	6.99	1806.9	220.8	4.24
CB146N12 14X16		342.0	100.56	17.560	16.365	1.545	2.468	2.468	.65	0	0	4910.4	559.3	6.99	1806.9	220.8	4.24
H14d 7 14X16		328.0	96.52	17.380	16.300	1.480	2.378	2.378	.60	0	0	4658.3	536.0	6.95	1720.1	211.1	4.22
CB146N12 14X16		328.0	96.47	17.380	16.299	1.479	2.378	2.378	.65	0	0	4656.8	535.9	6.95	1719.7	211.0	4.22
14WF 14X16	8,13,15	328.0	96.43	17.380	16.295	1.475	2.378	2.378	.60	0	0	4656.1	535.8	6.95	1718.5	210.9	4.22
CB146 11 14X15		325.0	95.58	17.164	16.087	1.493	2.387	2.387	.65	0	0	4475.9	521.6	6.84	1659.9	206.4	4.17

14" CB426

SPAR LOCK

Ref. Sht PW#36420 (Sht 9B)

Boom – Spud Lock

Pinion Girder at Spud Lock

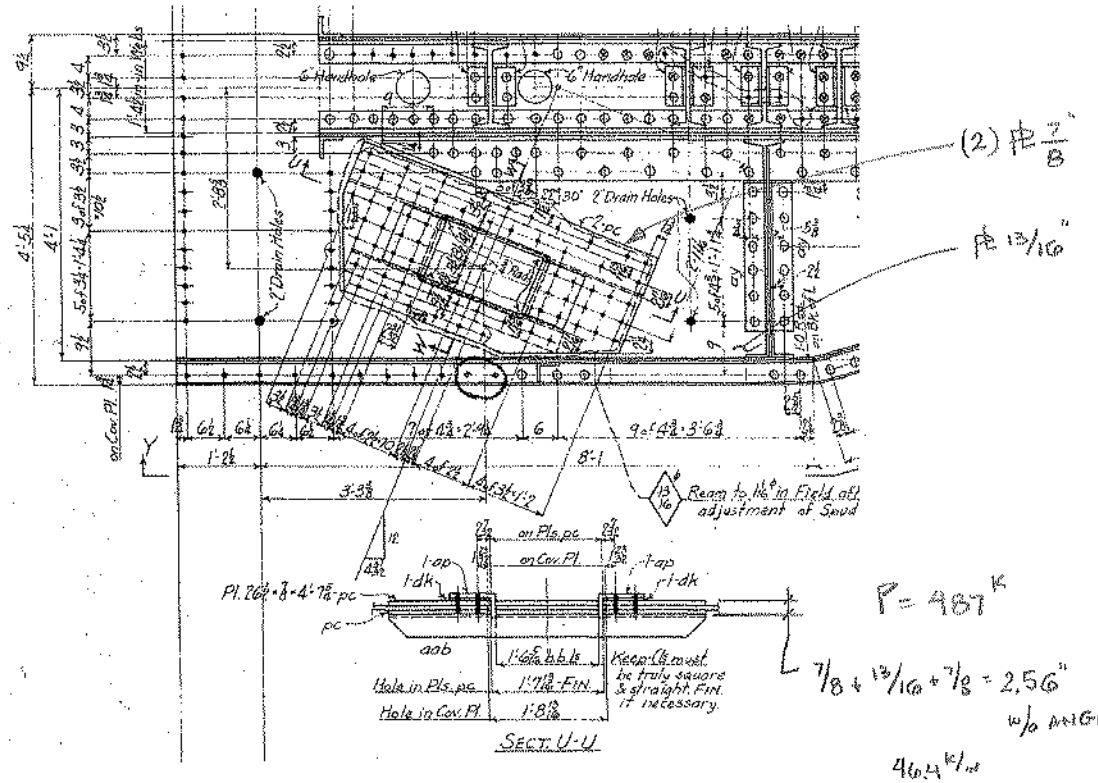

Bottom Section

$P = 487^{K}$

$7/8 + 13/16 + 7/8 = 2.56''$ w/o ANGLE

$f_{avg} = \frac{\overbrace{487 \div 10.5''}^{46.4\ K/in}}{2.56''} = 18.1^{ksi} < 0.33^{ksi}$ OK

RIVETS

(66) 1" ϕ RIVETS IN DBL SHEAR

$P_{CAP'y} = 66 \times 2 \times \underbrace{(0.79^{in^2} \times 15^{ksi})}_{11.9^{K}\ \text{SINGLE SHEAR}} = 1554^{K} \gg 487^{K}$

OK EVEN W/ RIVETS ON ONE SIDE (NO TENSION IN COVER PL'S)

NEED 41 SINGLE SHEAR RIVETS TO CONNECT TO PG1 GIRDER. # PRESENT ≫ 41

BLOCK SHEAR

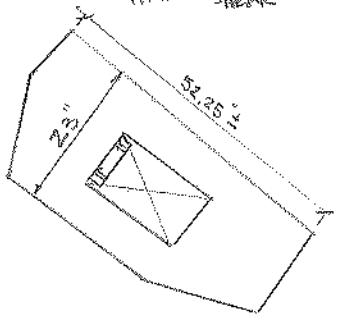

SHEAR YIELD $\frac{R_n}{\Omega} = \frac{.6 \times 33^{ksi}}{1.5} \times \left(2 \times 52.25'' \times \frac{13}{16}''\right) = 1232^{K}$ w/o TENSION

NET SECTION OK BY INSP.

Ref. Sht PW#36430 (Sht 9AB)

Boom – Spud Lock

Pinion Girder at Spud Lock

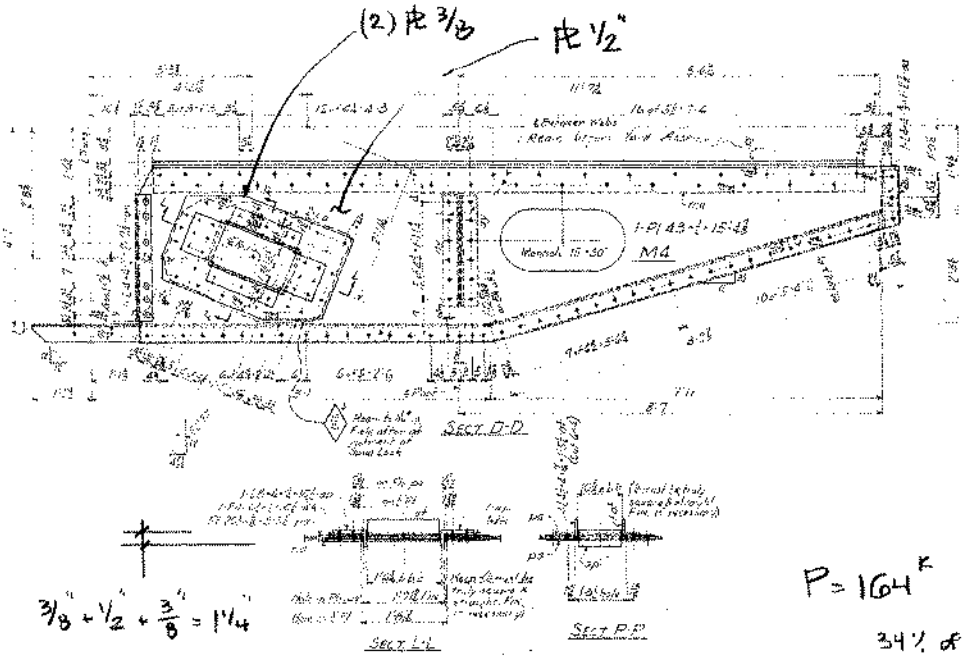

$3/8" + 1/2" + 3/8" = 1 1/4"$

OR

48% of LOWER PLATE

P = 164 K

34% of LOWER PLATE

LOWER PLATE GOVERNS

SEE PREVIOUS PAGE

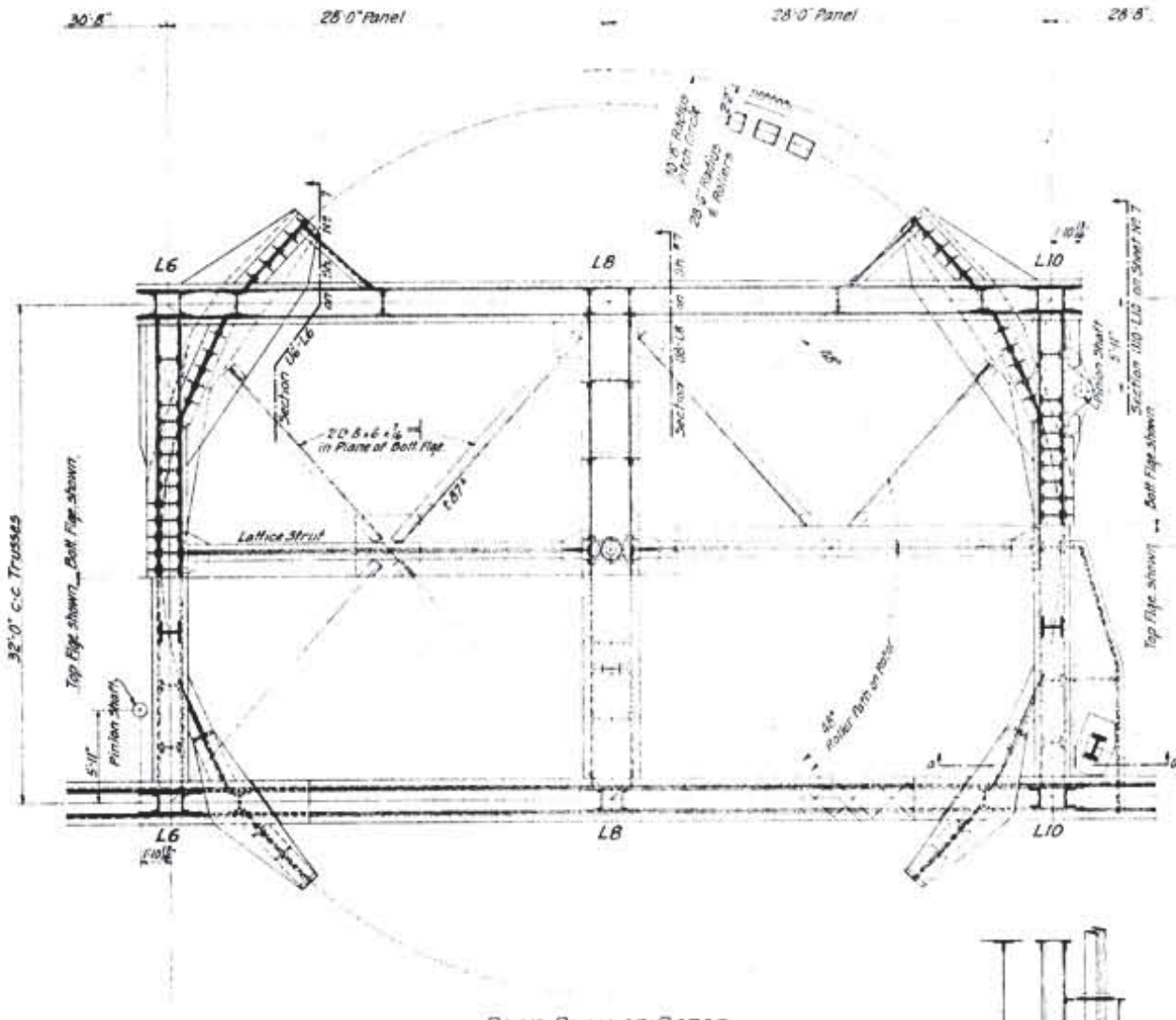

PART PLAN OF ROTOR
IN PLANE OF BOTTOM CHORD AT CENTER OF ROTATION

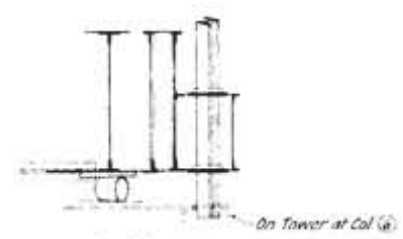

Section a-a

PART SECTION AT U10-L10
For Complete Section see Section U11-L10 Design Sheet #7

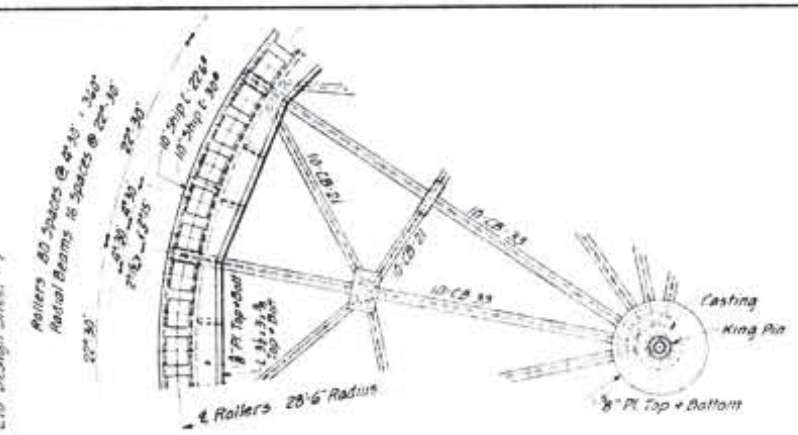

PART PLAN OF SPIDER & ROLLERS
80 Rollers, 18" Mean Dia. x 14" Long

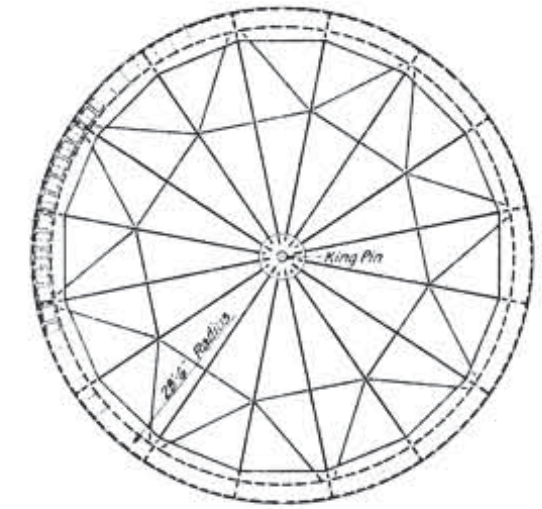

PLAN OF SPIDER AND ROLLERS

CALCULATIONS FOR SPIDER STRESSES

Case I - 350 Ton Lift + 10# Tail Wind

Total Load on Front Rollers (Sh #10) = 3827^k Radial Force = $\frac{15}{133}$ x 3827^k = 202^k
" " " Rear " " = 803^k " " = $\frac{15}{283}$ x 803^k = 42^k
Total = 4630^k

Total Radial Force on Front Rollers is held by 4 Arms $\frac{202}{4}$ = 50.5^k per arm.
" " " " Rear " " " " " " $\frac{42}{4}$ = 10.5^k " "

Radial Arms 10 CB 33 = 9.71" gr = 7.96" net
Tension on Radial Arms = $\frac{50.5}{7.96}$ = 6.35 ^k/□"

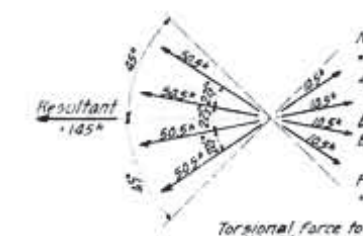

Net Resultant on Bushing at ctr of Spider
= 2 [(50.5-10.5) (cos 11½° + cos 33¾°)] =
40 x 3.62 = 145^k

Bronze Bushing at King Pin = 11 x 15 = 165 □"
Brg. on " " " " = $\frac{145}{165}$ = 0.88 ^k/□"

Friction at surface of King Pin
= .08 x 145 = 11.6^k

Torsional Force to overcome friction at roller circle
= $\frac{11.6 \times 7.5}{28.5 \times 12}$ = 0.253^k (negligible on bracing)

Bearing on Thrust Washer 6^k ÷ 3¼^k = 2.00" $\frac{12}{20}$ = 0.505 ^k/□" Brg on Bronze.
Tension on Axle, $\frac{10^k}{4.8^{\square"}}$ = 2.08 ^k/□"

Roller Segment

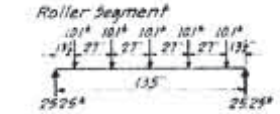

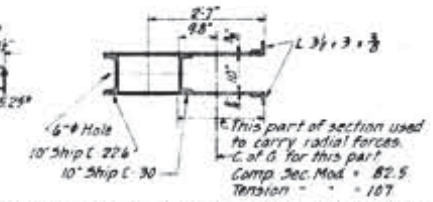

Figuring Segment as Simple Beam, Mom = 25.25 x 67.5 - [10.1 x (27+54)] = 890"^k
Stress, $\frac{890}{82.5}$ = 10.8 ^k/□" compression $\frac{890}{107}$ = 8.3 ^k/□" tension

Maximum Roller Load
See Sh #10 { Case I Roller 0, 191.1^k
Case II Roller 3, 191.1^k

Use Roller 18" mean dia. x 14" long
Capacity = 18 x 14 x 0.8^k = 201.6^k

117480
HH110
PW#36394

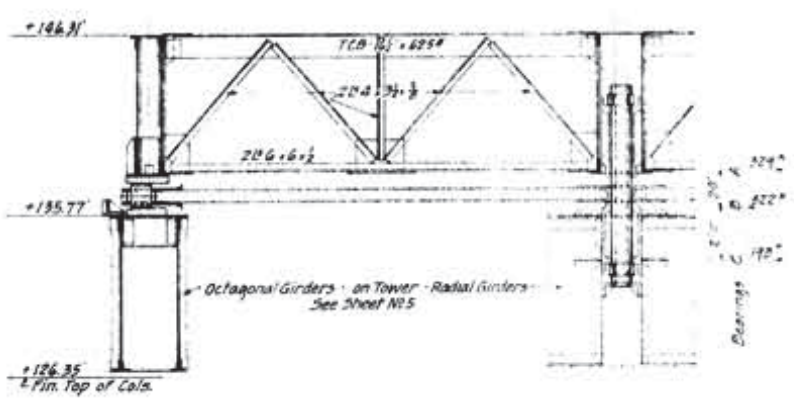

PART LONGITUDINAL SECTION AT CENTER

KING PIN CALCULATIONS

Note - King Pin is designed for entire Shear of 329^k due to 30# Wind

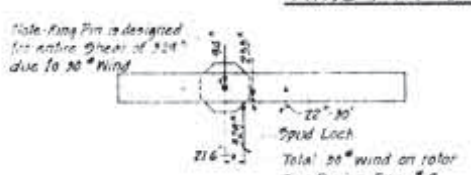

Static Load - Entire 30# Wind taken on King Pin

Bearing A $\frac{329}{12 \times 18}$ = 1.81 ^k/□" Bearing on Bronze Bushing

Bearing B $\frac{322}{16 \times 4}$ = 5.18 ^k/□" Bearing on Steel

Bearing C $\frac{192}{16 \times 4}$ = 3.22 ^k/□" Bearing on Steel

Operating Condition 10# Wind taken on King Pin

Bearing A $\frac{110}{12 \times 18}$ = .612 ^k/□" Bearing on Bronze

Bearing B $\frac{187^k}{16 \times 4}$ = 2.97 ^k/□" Bearing on Steel

Bearing C $\frac{72}{16 \times 4}$ = 1.28 ^k/□" Bearing on Steel

Static Load

Max Bending on Pin = 329 x 28" = 9200 in ^k
S.M. [16"^4 - 7"^4] ÷ 8.16 = $\frac{9200}{17.5}$ = 525 ^k/□" Bending

Practically impossible since 30# Uplift can only be produced by failure of Lifting Tackle while lifting load

Direct Stress due to
300# Uplift = $\frac{300}{138.50 \square"}$ = $\frac{3.6}{138.5}$ ^k/□" Bending

Spec. 2452 h Class B.S. Forging Furnished

Operating Condition 10# Wind + 300# Uplift

Bending on Pin = 110 x 28 = 3080 in ^k
÷ 8.16 S.M. = 8.38
$\frac{300^k}{138.5}$ = 3.6
11.98 ^k/□" at point of Max. Stress (B)

Stress at Shoulder (at X)
[12"^4 - 7"^4] ÷ 7.6 □" $\frac{300^k}{7.6}$ = 6.72 ^k/□" on Pin Section thru Shouldered Part

Max Bearing Stress on Shoulder = $\frac{300^k}{6.5}$ = 7.83 ^k/□"
(16"^4 - 12"^4) ÷ 6.5 □"

Retaining Ring Stresses (at Y)

1.5 Bearing = 7.83 = 11.75 ^k per in. of ring
Resisting Lever Arm = ⅝ + 7 = 4.67"
Outward Force producing Tension =
2⅝ x $\frac{11.75}{4.67}$ = 4.93 ^k per in. of ring
Tension = $\frac{P \cdot d}{2}$ = $\frac{4.93 \times 22"}{2}$ = 55 ^k
Assume this taken on lower part of ring 5⅝" x 2" x 5"
Stress = $\frac{55^k}{5}$ = 11.0 ^k per □"

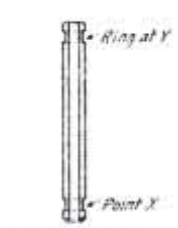

KING PIN

KING PIN & SPIDER

350 TON HAMMERHEAD CRANES

RIM BEARING TYPE

ONE CRANE FOR NEW YORK NAVY YARD
ONE CRANE FOR NORFOLK NAVY YARD

ORDER NOS H-2221 to 2240
INQUIRY NO P-2371.
In Charge of V.D.B.
Revised 3-29-39 4-19-39 8-31-39

American Bridge Company
Pittsburgh, Pa.
March 22 1939
Sheet No 9 of

COPYRIGHT - AMERICAN BRIDGE CO. 1934

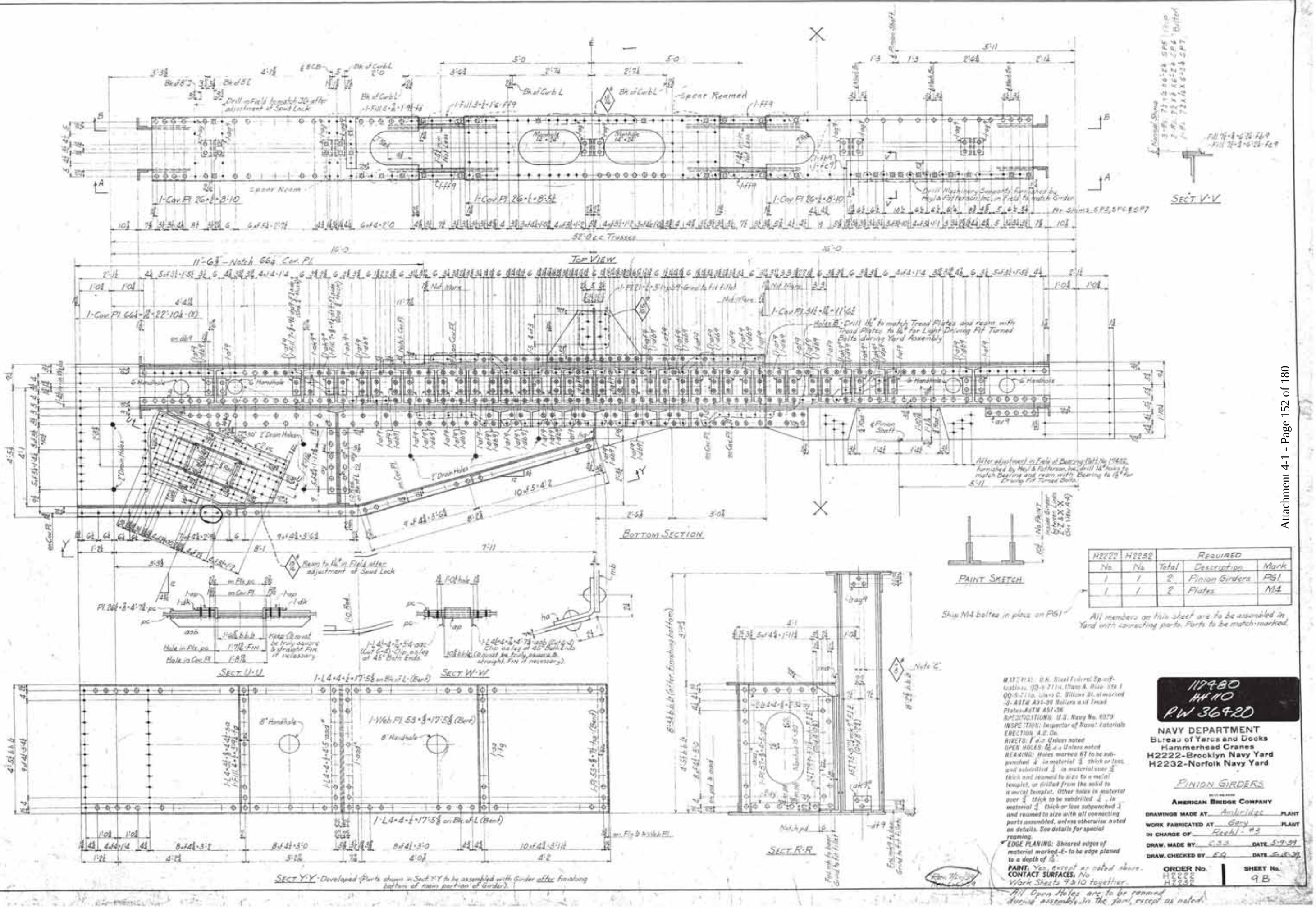

H2222 No.	H2232 No.	Required Total	Description	Mark
1	1	2	Pinion Girders	PG1
1	1	2	Plates	M4

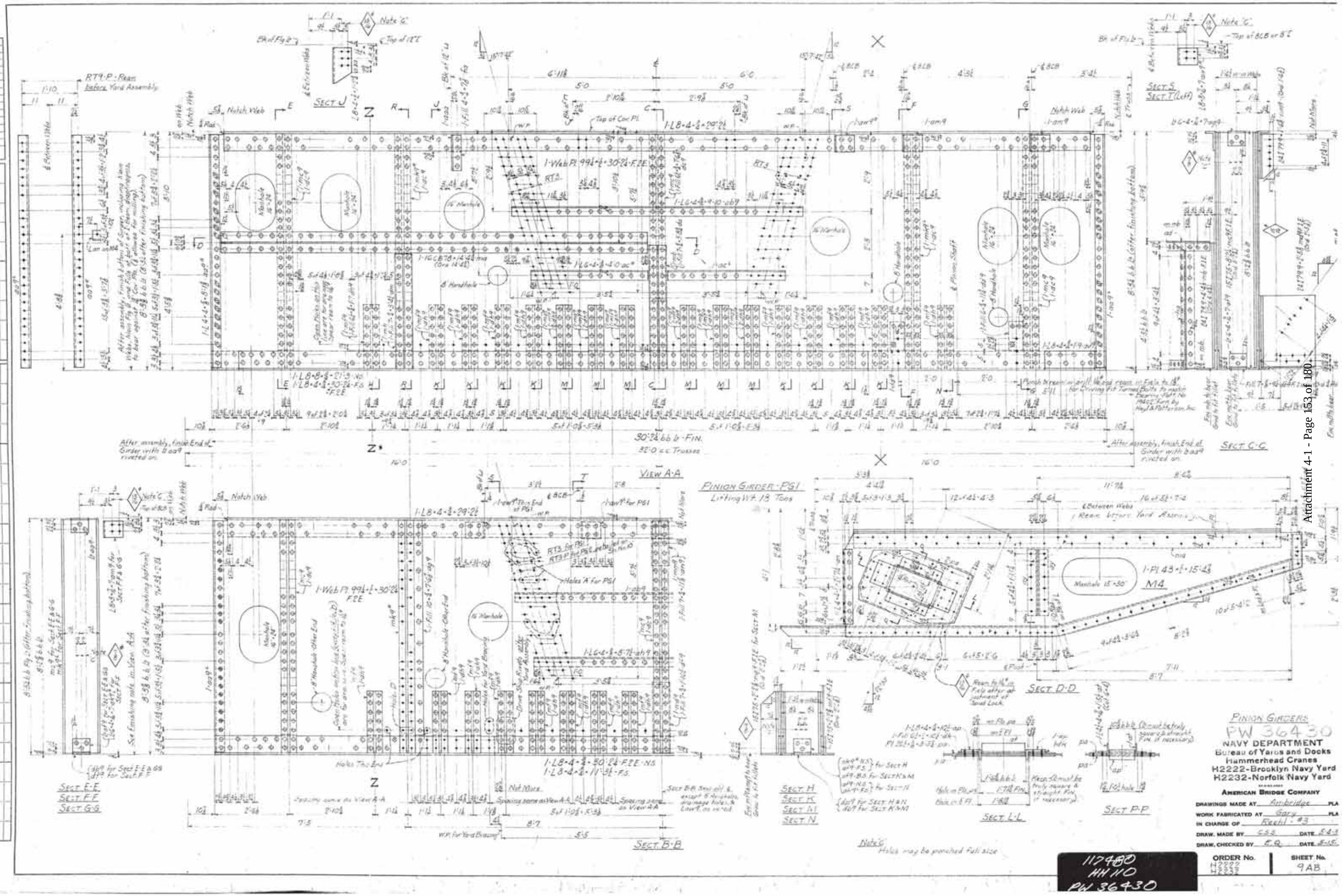
SECT. J
SECT. S
SECT. T (Left)
SECT. C-C
VIEW A-A
SECT. D-D
SECT. E-E
SECT. F-F
SECT. G-G
SECT. B-B
SECT. H
SECT. K
SECT. N
SECT. L-L
SECT. P-P
PINION GIRDER - PG1
Lifting Wt. 18 Tons
M4
Manhole 15'-30"
30'-2½ bb b - FIN.
32'-0 c.c. Trusses
Note G
Holes may be punched full size
PINION GIRDERS
PW 36430
NAVY DEPARTMENT
Bureau of Yards and Docks
Hammerhead Cranes
H2222-Brooklyn Navy Yard
H2232-Norfolk Navy Yard
AMERICAN BRIDGE COMPANY
DRAWINGS MADE AT Archbridge PLA
WORK FABRICATED AT Gary PLA
IN CHARGE OF Roehl #3
DRAW. MADE BY GSS DATE 5-4-3
DRAW. CHECKED BY E.Q. DATE 5-15
ORDER No. H2222 H2232
SHEET No. 9AB
117480
HH 110
PW 36430

4-1-13
King Pin Assembly Evaluation

REF. SHT PN# 36428

Boom – Spud Lock & King Pin Assemblies
Arrangement

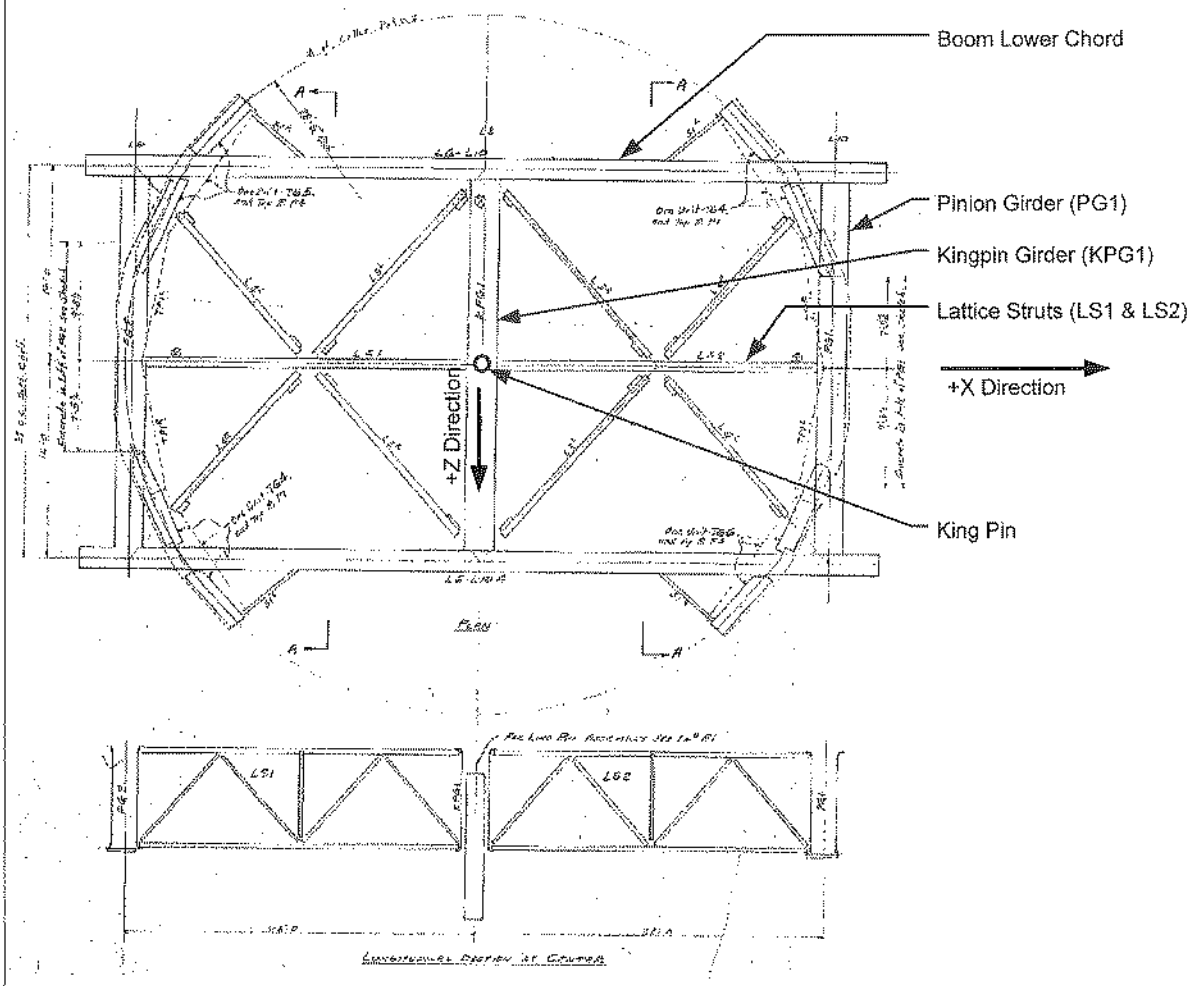

SEE "PIN ASSEMBLY FREE BODIES - MAXIMUM STOWED WIND"
FOR KING PIN LOADS (WLX LOADING)

LOADS

P = 181K MAX P_x ✓
41 MAX P_z ✓
182K MAX P ANGLED WIND ✓

FOR WLX LOADING, KING PIN GIRDER (KPG1) SUPPORTS KING PIN & IS ADEQUATE BY INSPECTION.

REF SHT PW#42894

Boom – King Pin

King Pin Assembly

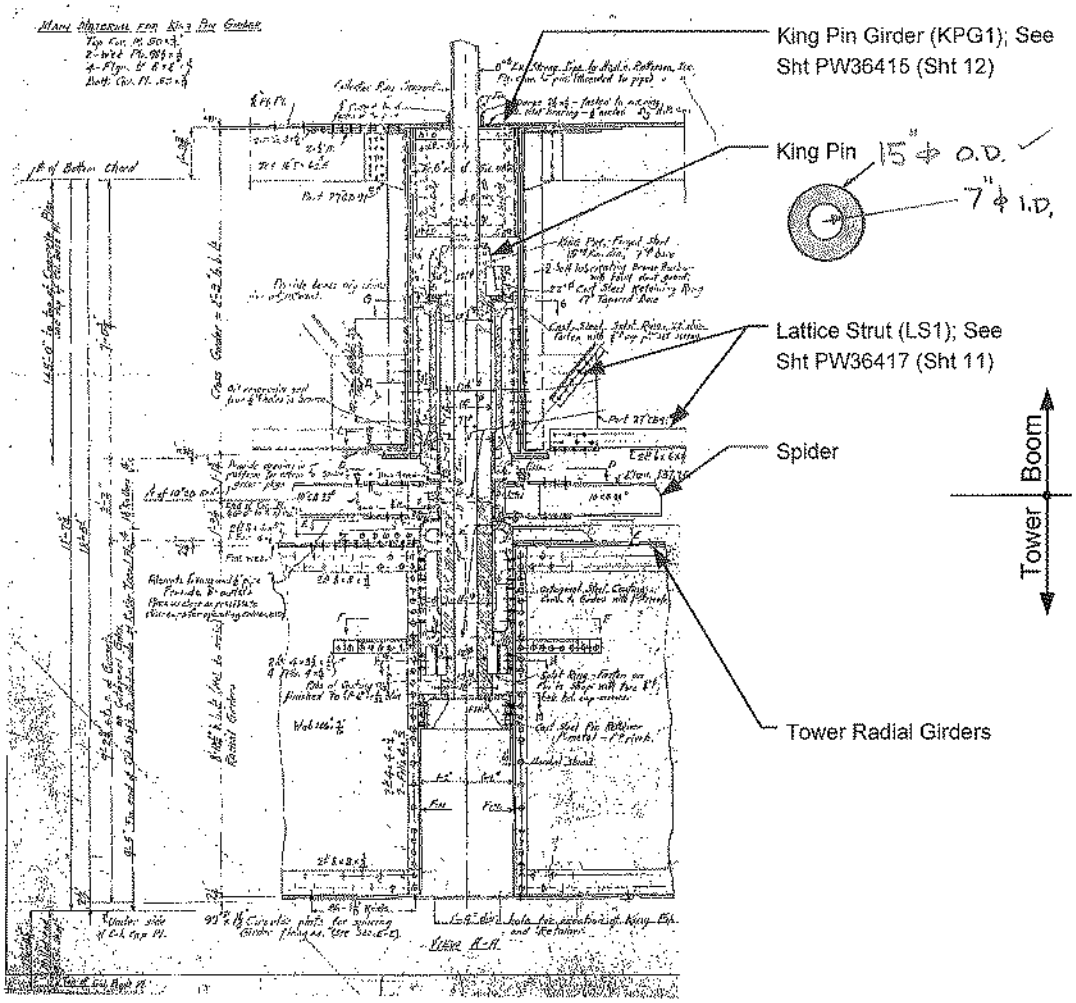

$k = \frac{ID}{OD} = \frac{8.5}{7.5} = 0.47$

$A = \frac{\pi}{4}(OD^2 - ID^2) = 138.2 \text{ in}^2$

King Pin

$P_{max} = 181^k$

$f_v = \frac{VQ}{Jt} = \frac{V}{A}\frac{4}{3}\left[\frac{k^2+k+1}{k^2+1}\right] = \frac{181}{138.2}\cdot\frac{4}{3}\left[\frac{1.69}{1.22}\right] = 2.4 < 12.2 \text{ ksi}$

$f_b = \frac{182^k \times 217' \times 12}{\underbrace{\frac{1}{6}\left[15^3 - 7^3\right]}_{Z}} = 9.4^{ksi} < 20^{ksi} = \frac{33}{1.65}$ ok

∴ KINGPIN STRENGTH IS ADEQUATE

Boom – King Pin Support

Ref. Dwg PW#42894 (Sheet D1)
and PW#36412 (Sheet 5)

Pin Assembly Free Bodies
Maximum stowed wind

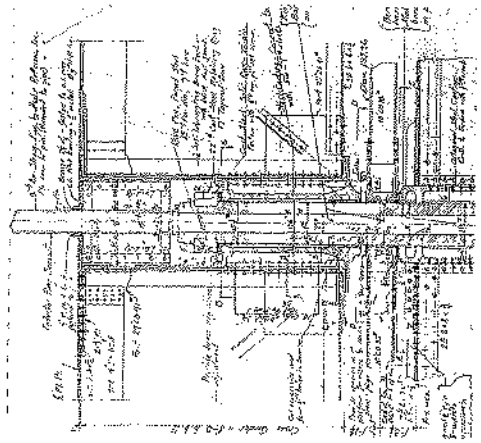

Pin Assembly

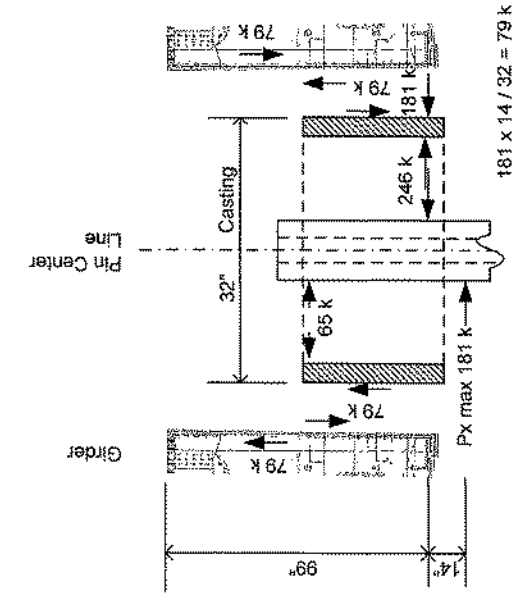

Pin Assembly Forces

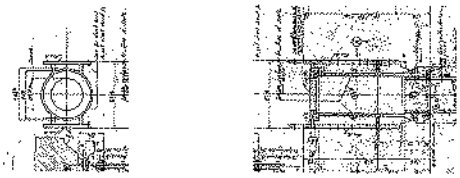

Casting

REG. SHT PW # 42894

Boom – KING PIN

King Pin Girder and Lattice Strut at King Pin

MAX X-WIND LOAD CONDITION

MAX $P_x = 181^k$

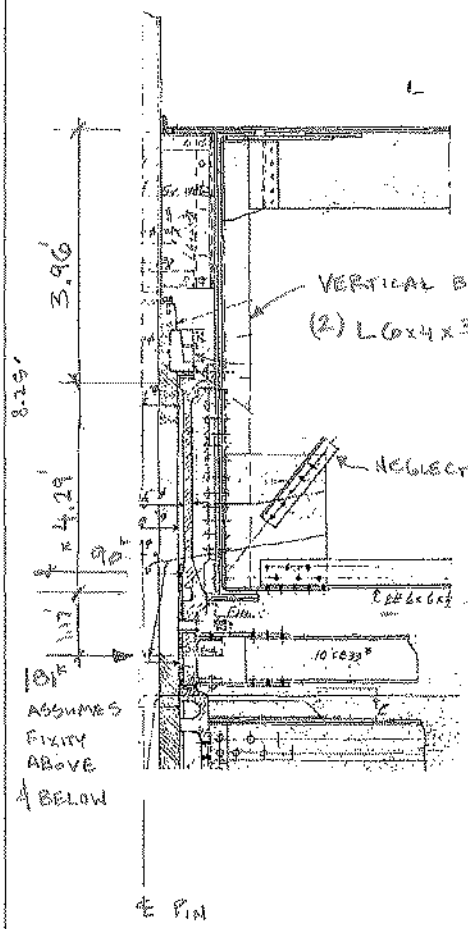

UPPER LATTICE STRUT NOT REVIEWED. SEE BELOW.

VERTICAL BACKUP ANGLES

(2) L6x4x3/8 AT EACH KPG1 GIRDER

NEGLECT

90^k TOTAL

1/2 LOAD TO EACH DBL ANGLE

$A = 5.77 \times 2 = 11.54 \text{ in}^2$

BOTTOM DBL ANGLES (2) L6x6x1/2

$P = 90^k$ ON ONE DBL ANGLE

$f_a = \frac{90^k}{11.54} = 7.8^{ksi} < 16^{ksi}$ OK

$\frac{Kl}{r} = \frac{1.0 \times 9.75'}{1.86^{in}} = 63$ ($\times 12$)

$F_e = \frac{\pi^2 E}{\left(\frac{Kl}{r}\right)^2} = 72.3$ ($E = 29{,}000$)

$F_a = \underbrace{\frac{1}{1.67} \times \left[.658^{\frac{33}{72.3}}\right]}_{.4966} 33 = 16^{ksi}$

RIVETS

$P = 2 \times 6 \times .79^{in^2} \times 15^{ksi} = 142^k > 90^k$ OK

↳ DBL SHEAR

BOOM – KING PIN

KING PIN SUPPORT

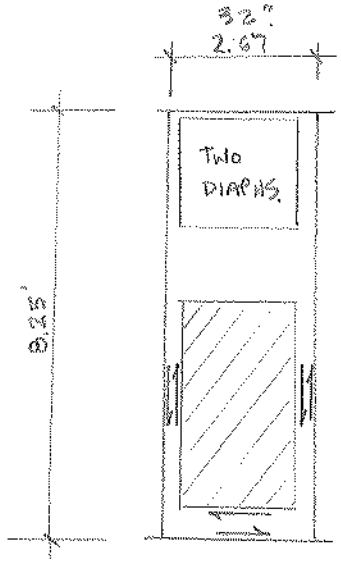

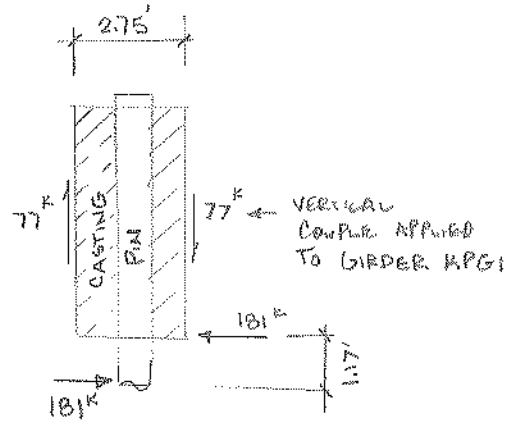

GIRDER KPG1 OK BY INSPECTION FOR 77K VERTICAL COUPLE IMPOSED FROM CASTING.

CHECK GPR TORQUE

GIRDER TORSION –

$T = 181^{K} \times 1.17^{Ft} = 212^{K\text{-}Ft}$

$q_T = \frac{T}{2A} = \frac{212}{2 \times (2.75' \times 8.25')} = 4.7^{K/Ft}$

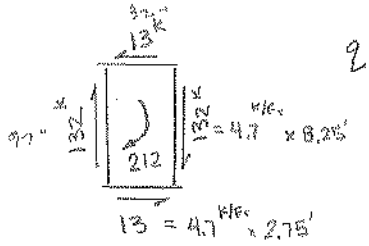

ASSUMES ALL TORSION IS RESISTED W/ BOX TORSION. ACTUALLY SOME TORSION IS CARRIED AS A VERTICAL COUPLE, ESPECIALLY WITH A STIFF GIRDER. ∴ SHEAR AT TOP FLANGE WILL BE LESS THAN 13K.

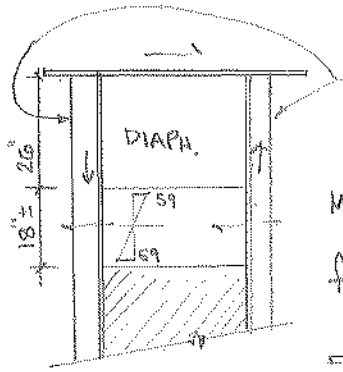

SECTION D ON PW# 36415

TWO VERTICAL ANGLES AT EACH WEB (L6x4x3/8)

HALF EACH WEB

$M \cong \frac{13^{K}}{2} \times \frac{18''}{2} = 59^{K\text{-}in}$

$f_b = \frac{59^{K\text{-}in}}{10.3^{in^3}} = 5.7^{KSI}$

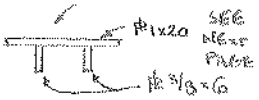

SHEAR OK.

By: tg
Chk: egs
Appr: egs

Asymmetric Section
Strong Axis Bending Property Calculation
L:\S1988\Calcs\Grids-Visio\[KingPinGirder-WebAtKingPin.xls]Calc

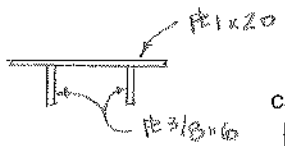

Input Definition

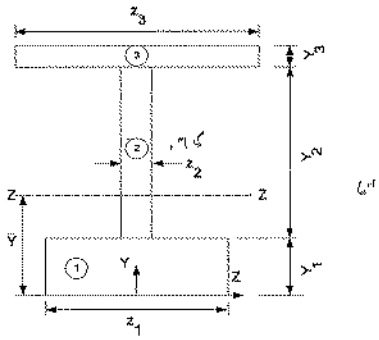

Calculated Shape

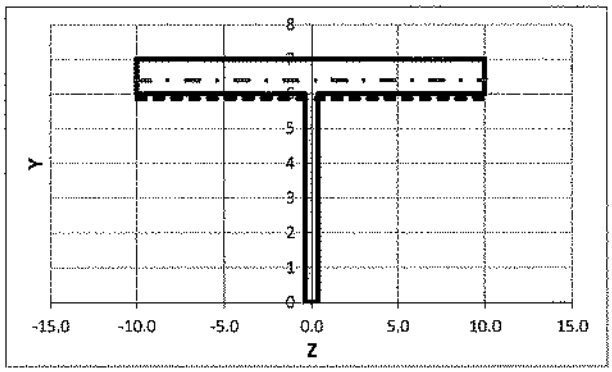

Plates	z	y	y bott	y top	Area	y bar	Area(y bar)	I_z plate	A(ybar)^2	abs(yp - y bar)	Z
	l	l	of plate	of plate	l^2	l	l^3	l^4	l^4	l	l^3
3	20.00	1.00	6.00	7.00	20.00	6.50	130.00	1.67	8.27	0.11	5.25
2	0.75	5.25	0.75	6.00	3.94	3.38	13.29	9.04	24.26	3.01	11.86
1	0.75	0.75	0	0.75	0.56	0.38	0.21	0.03	16.91	6.01	3.38
Section Data					**24.50**	5.86	143.50	10.74	49.43		20.50
						y bar	5.86	l	yp	6.39	l

Stiffness:	I_z total	60.17	l^4			
Bending Strength:	$s_z$top	**52.6**	l^3			
	$s_z$bot	**10.3**	l^3			
	Z_z	**20.5**	l^3			
Elastic Shear Flow:	Q 2 to 3	12.9	l^3	Q 2 to 3 / I_z	0.21	1/l
	Q 1 to 2	3.1	l^3	Q 1 to 2 / I_z	0.05	1/l

6 @ .75 x 6" = 4.5 in²

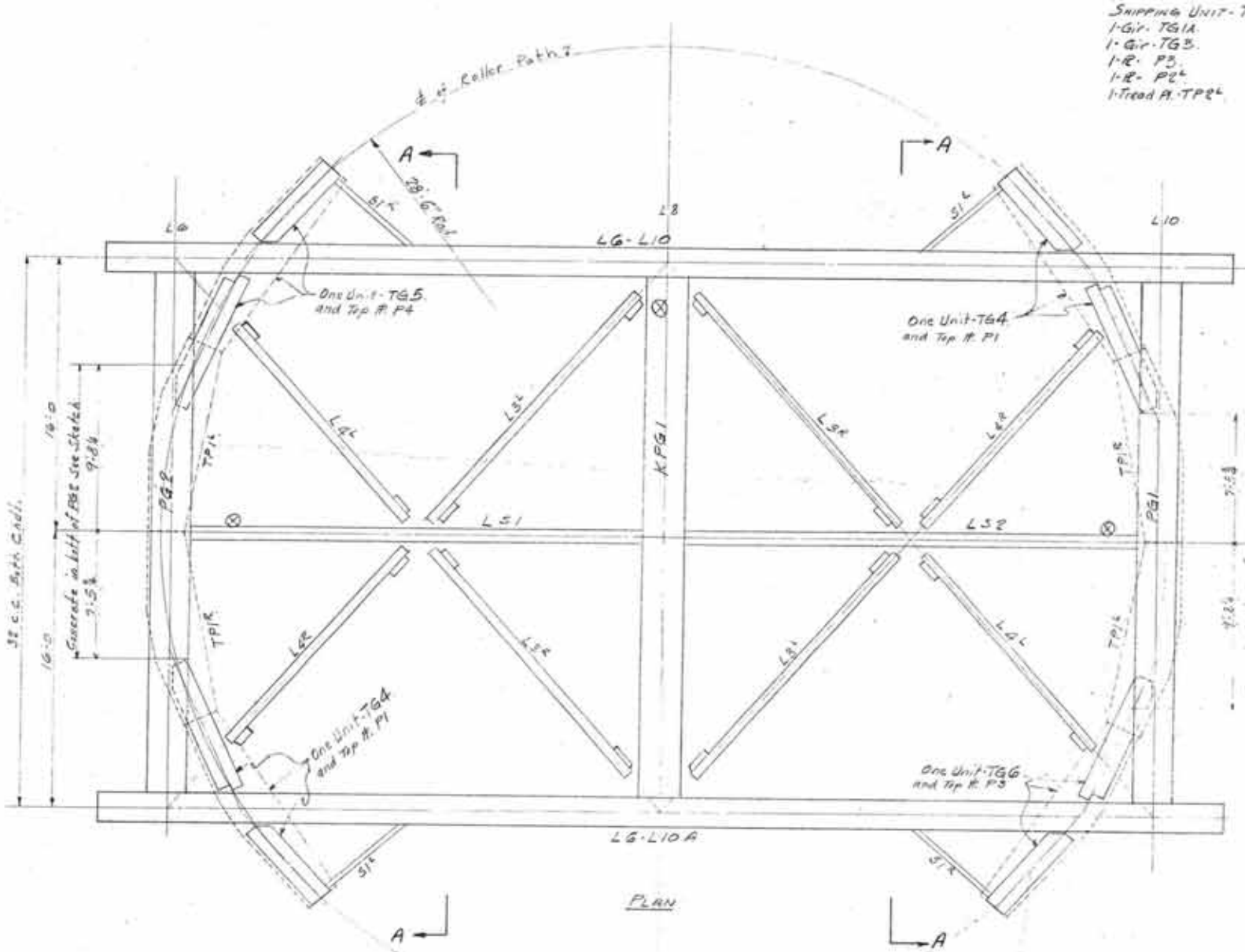

PLAN

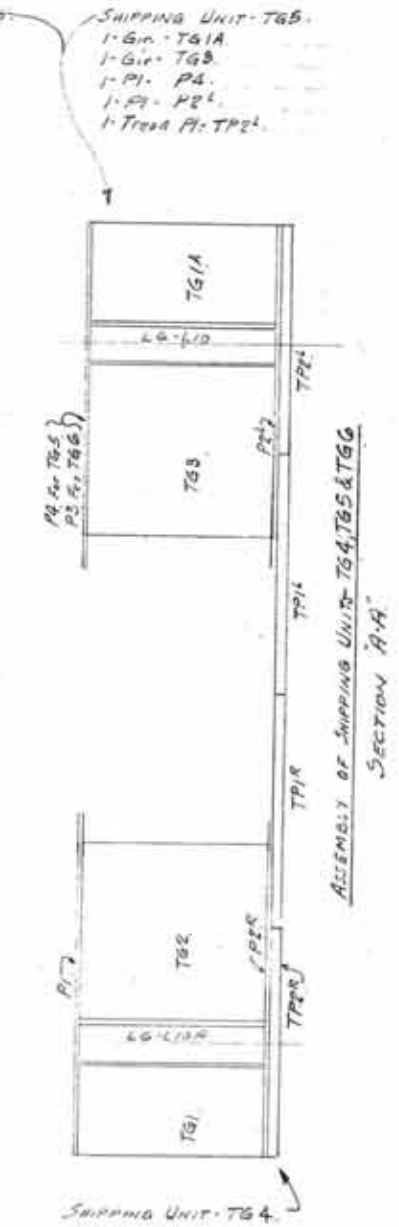

ASSEMBLY OF SHIPPING UNITS TG4, TG5 & TG6
SECTION "A-A"

LIST OF DRAWINGS LOWER TURNTABLE ASSEMBLY		LIST OF DRAWINGS UPPER TURNTABLE ASSEMBLY	
SH. No.	DESCRIPTION	SH. No.	DESCRIPTION
E1	Erection Diagram	E2	Erection Diagram
1	Radial Girders	7AD	Bottom Chord
2AB	Octagonal " (Web)	7BD	" "
2B	" " (Flg.)	7CD	" "
3	King Pin, Rollers, Etc.	7D	" "
4	Spider	8AD	" "
5	Castings	8BD	" "
6	Tread Plates	8CD	" "
		8D	" "
		9AB	Pinion Girders
		9B	" "
		10AB	" "
F1	Shims	10B	" "
F2	Bolts	11	Tread Girders
		12	King Pin Girder
		13	Tread Plates
		14	Latt. Girder
		15	" " & Brac.
		F3	Bolts
		F4	"

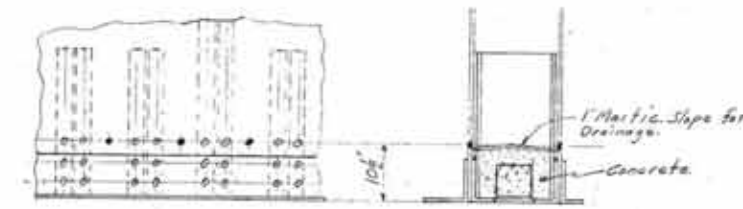

Sketch showing Concrete and Mastic in bottom of PG1 & PG2.

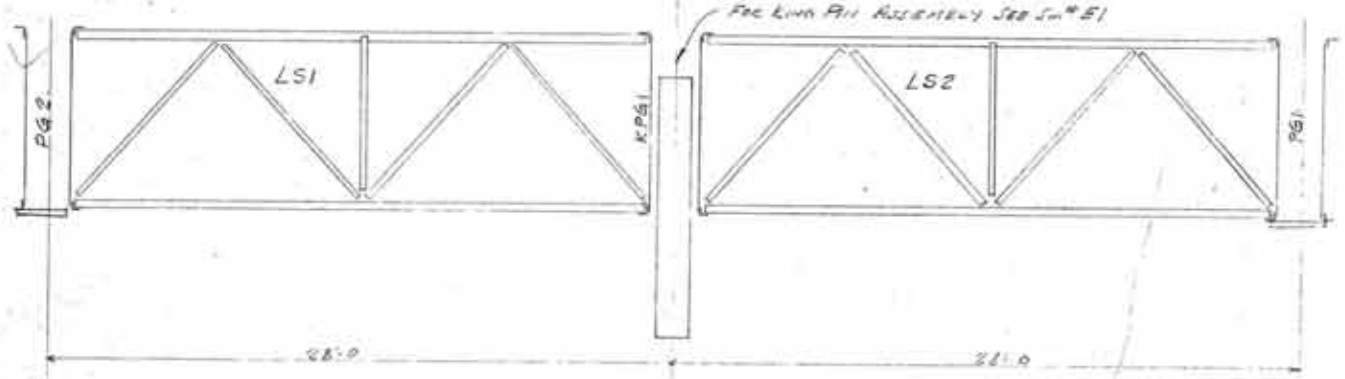

LONGITUDINAL SECTION AT CENTER

ORDER OF ERECTION:

1. King Pin.
2. Spider, Track ℄ and Rollers
3. King Pin Girder.
4. Tread Plates TP1℄
5. Tread Girders
6. Pinion Girders PG1 + 2
7. Bottom Chords LG-L10 and LG-L10A.
8. Latticed Struts LS1 + LS2, and S1℄.
9. Bottom Laterals L3℄ + L4℄.

ORDER OF YARD ASSEMBLY

All members are to be assembled upside down relative to their final position in the Crane. This will permit the planing of Roller Paths from above.

1. Bottom Chords LG-L10 + LG-L10A.
2. King Pin Girder KPG1.
3. Struts LS1 + LS2.
4. Pinion Girders PG1 + PG2.
5. Bolt P1, P3 + P4 to underside of Chords.
6. Bolt Bent Pls. hb℄ + hc℄ (sheet 11) to Chords, maintaing dist. of 1'-9¾" face to face of bent pls. (use temporary shims)
7. Bolt Bent Pls. ha℄ to Pinion Girders.
8. Place TG1, TG1A, TG2, TG3 and S1℄.
9. " P2R℄
10. Laterals L3℄ + L4℄
11. Ream and rivet P2R℄
12. TP1℄
13. TP2℄ (see note on Sh. 13 regarding the bolting).
14. King Pin.

ERECTION DIAGRAM
NAVY DEPARTMENT
Bureau of Yards and Docks
Hammerhead Cranes
H2222-Brooklyn Navy Yard
H2232-Norfolk Navy Yard

AMERICAN BRIDGE COMPANY

DRAWINGS MADE AT AMBRIDGE PLANT
WORK FABRICATED AT GARY PLANT
IN CHARGE OF KEHL-ROOM #3
DRAW. MADE BY S.M. DATE 8/6/38
DRAW. CHECKED BY WER DATE 5-12-39

ORDER No. H-2222 H-2232
SHEET No. E2

117480
HH110
PW# 36428

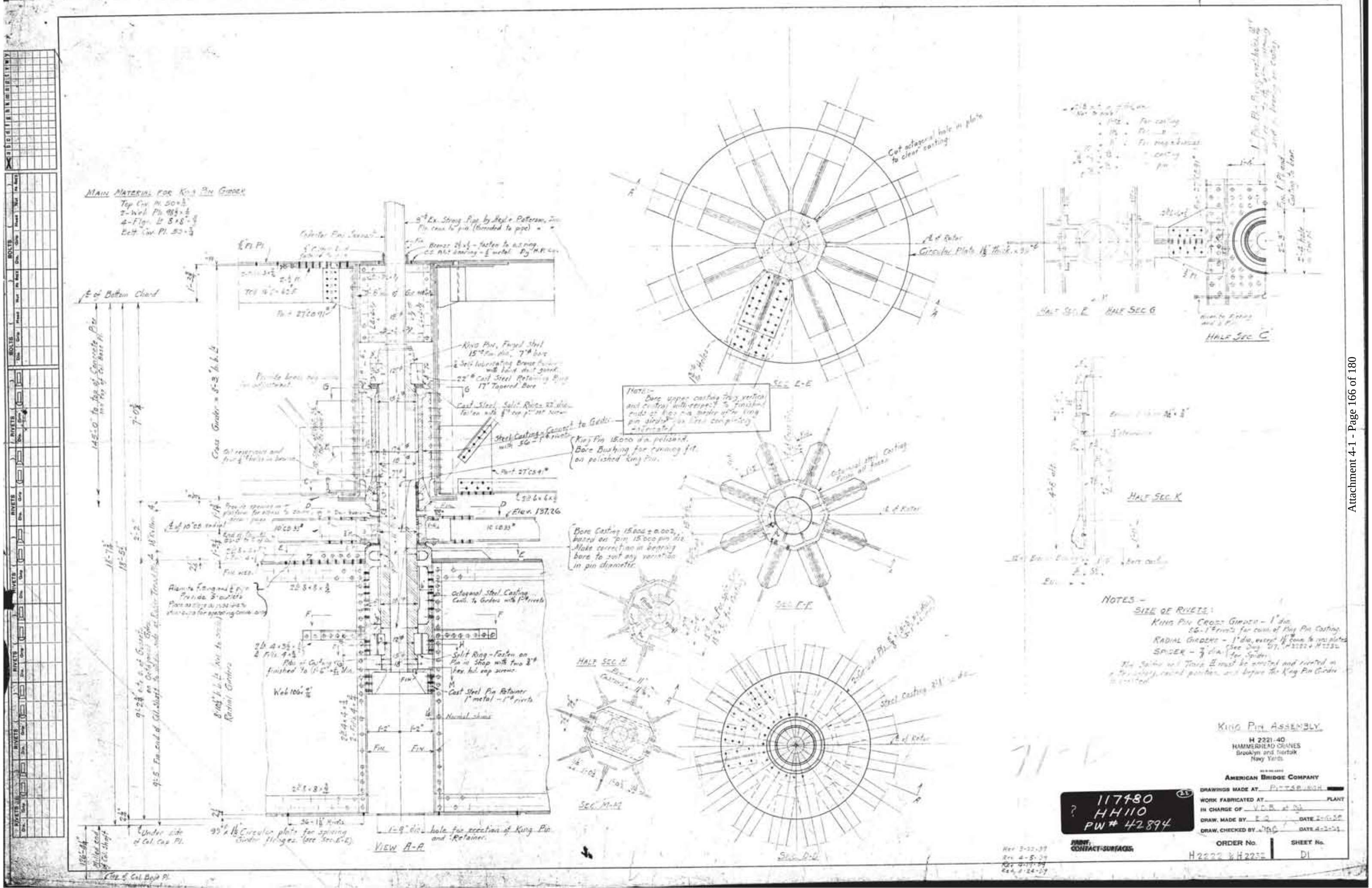
MAIN MATERIAL FOR KING PIN GIRDER
Top Cov. Pl. 50 × 1/2
2-Web Pls 48 1/2 × 1/2
4-Flgs. Lt 8 × 8 × 3/4
Bott Cov. Pl. 50 × 3/4
℄ of Bottom Chord
Cross Girder
Radial Girders
Under side of Col. Cap Pl.
Milled end of Col. Shaft
Top of Col. Base Pl.
Cut octagonal hole in plate to clear casting
Circular Plate 1 1/8" thick
Note:- Bore upper casting true vertical and central with respect to finished ends of pins on center of the king pin girder, as this completing
Bore Casting 15.000 ± 0.002, based on pin 15.000 pin dia. Make correction in bearing bore to suit any variation in pin diameter.
King Pin, Forged Steel 15" Pin dia. 7" bore
Self lubricating Bronze Bushing with solid dust guard
22" Cast Steel Retaining Ring 17" Tapered Bore
Cast Steel Split Ring
Steel Casting Connect to Girder
King Pin 15.000 dia. polished. Bore Bushing for running fit on polished King Pin.
Octagonal Steel Casting Connect to Girders with 1" rivets
Split Ring - Fasten on Pin in Shop with two 3/4" hex. hd. cap screws.
Cast Steel Pin Retainer 1" metal - 1" rivets
Elev. 137.26
Web 106 × 7/16
Circular plate for splicing Girder flanges (see Sec. E-E)
1-9" dia. hole for erection of King Pin and Retainer.
VIEW A-A
SEC. E-E
SEC. F-F
HALF SEC. H
SEC. M-M
SEC. D-D
HALF SEC. E
HALF SEC. G
HALF SEC. C
HALF SEC. K
NOTES -
SIZE OF RIVETS:
KING PIN CROSS GIRDER - 1" dia.
RADIAL GIRDERS - 1" dia. except 1 1/8" rivets in web plates
SPIDER - 7/8" dia. (for Spider)
KING PIN ASSEMBLY
H 2221-40
HAMMERHEAD CRANES
Brooklyn and Norfolk Navy Yards
AMERICAN BRIDGE COMPANY
DRAWINGS MADE AT
WORK FABRICATED AT
IN CHARGE OF
DRAW. MADE BY
DRAW. CHECKED BY
117480
HH110
PW # 42894
ORDER No.
SHEET No.
D1

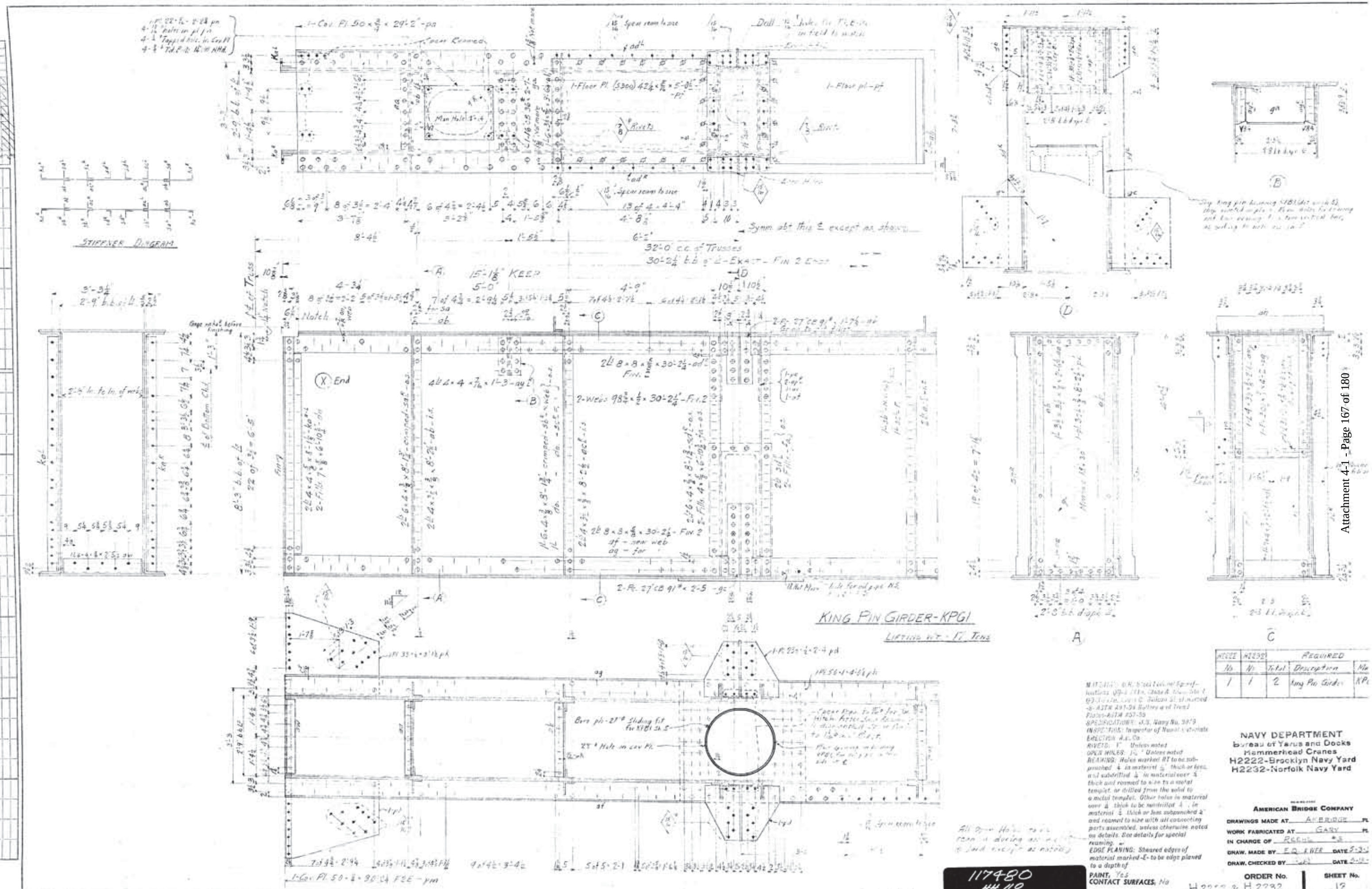

HCDEE	H2232	REQUIRED		
No	No	Total	Description	Ma
1	1	2	King Pin Girder	KP1

MATERIAL: Q.R. Steel Tolerances Specifications Q9-1 Class A, Class B, Class C, Q9-10 Class C. Silicon Steel marked -S- ASTM A94-54 Bolters and Trees Plates-ASTM A57-39
SPECIFICATIONS: U.S. Navy No. 3979
INSPECTION: Inspector of Naval Materials
ERECTION: A.B.Co.
RIVETS: ½" Unless noted
OPEN HOLES: ¼" Unless noted
REAMING: Holes marked RT to be subpunched ¼ in material ½" thick or less and subdrilled ¼" in material over ½ thick and reamed to size to a metal templet, or drilled from the solid to a metal templet. Other holes in material over ½ thick to be subdrilled ¼ in material ½ thick or less subpunched ¼" and reamed to size with all connecting parts assembled, unless otherwise noted on details. See details for special reaming.
EDGE PLANING: Sheared edges of material marked -E- to be edge planed to a depth of
PAINT, Yes
CONTACT SURFACES, No

NAVY DEPARTMENT
Bureau of Yards and Docks
Hammerhead Cranes
H2222-Brooklyn Navy Yard
H2232-Norfolk Navy Yard

AMERICAN BRIDGE COMPANY
DRAWINGS MADE AT AMBRIDGE PA.
WORK FABRICATED AT GARY PA.
IN CHARGE OF REGNE
DRAW. MADE BY F.R. LEWIS DATE 5-3-
DRAW. CHECKED BY DATE 5-18-

ORDER No. H2222 & H2232
SHEET No. 12

117480
HH 110
P.W 36415

36415

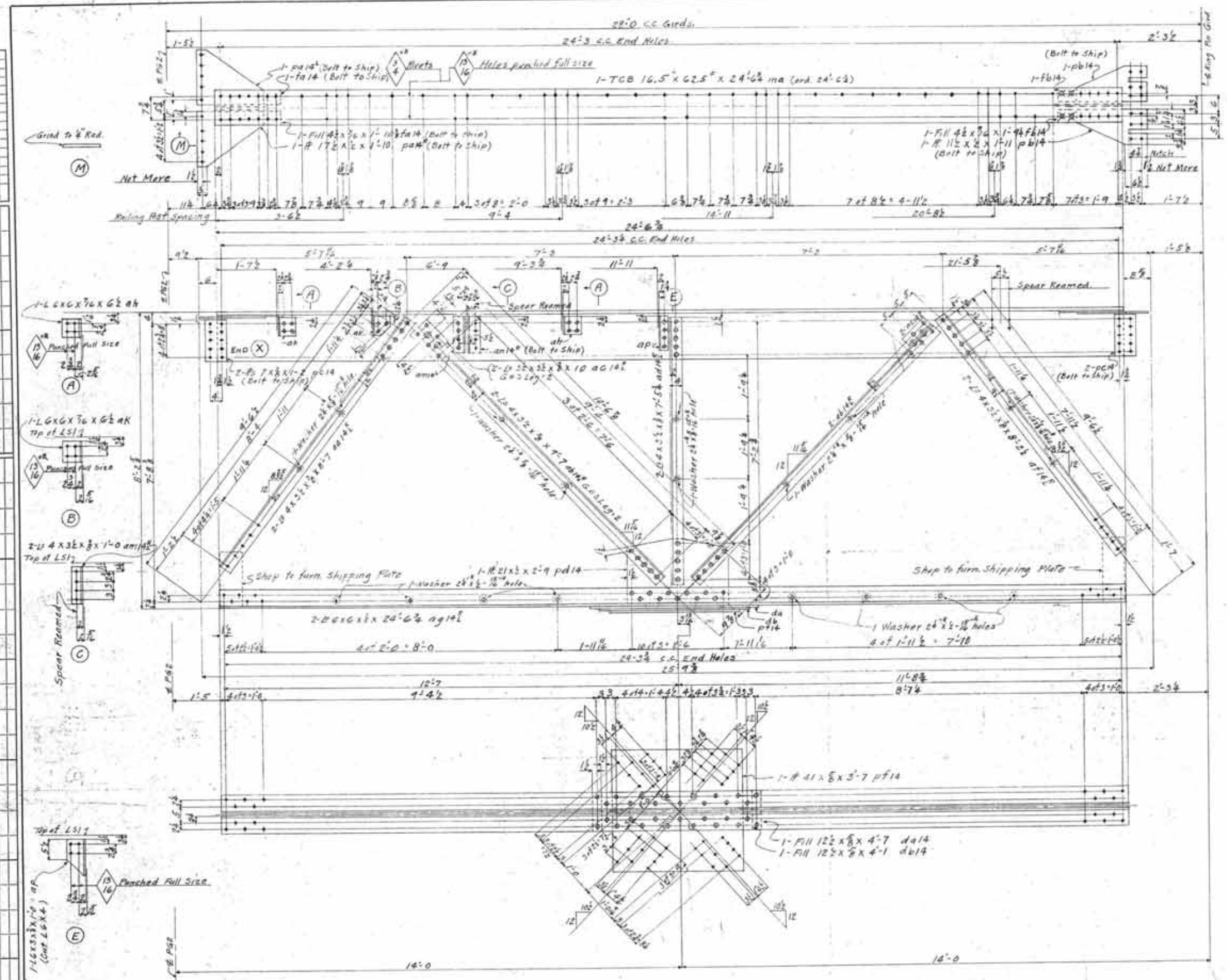

H2222 No.	H2232 No.	REQUIRED Total	Description	Mark
1	1	2	Lattice Strut	LS1

Work Sheets 14 & 15 Together

MATERIAL: U.N. Steel Federal Specifications: QQ-S-711a, Class A. Rivet Steel QQ-S-711a, Class C. Silicon St. el marked -S- ASTM A94-33 Rolners and Tread Plates-ASTM A57-38
SPECIFICATIONS: U.S. Navy No. 8979
INSPECTION: Inspector of Naval Materials
ERECTION: A.E. Co.
RIVETS: 7/8" Unless noted
OPEN HOLES: 7/8" Unless noted
REAMING: Holes marked RT to be subpunched ¼" in material ⅜" thick or less, and subdrilled ¼" in material over ⅜" thick and reamed to size to a metal templet, or drilled from the solid to a metal templet. Other holes in material over ⅜" thick to be subdrilled ¼", in material ⅜" thick or less subpunched ¼" and reamed to size with all connecting parts assembled, unless otherwise noted on details. See details for special reaming.
EDGE PLANING: Sheared edges of material marked -E- to be edge planed to a depth of
PAINT, Yes
CONTACT SURFACES, No

All open Holes are to be reamed during assembly in yard except as noted

NAVY DEPARTMENT
Bureau of Yards and Docks
Hammerhead Cranes
H2222-Brooklyn Navy Yard
H2232-Norfolk Navy Yard

LATTICE STRUT

AMERICAN BRIDGE COMPANY

DRAWINGS MADE AT Ambridge PLANT
WORK FABRICATED AT Gary PLANT
IN CHARGE OF Reehl DR. #3
DRAW. MADE BY LDB DATE 5-2-39
DRAW. CHECKED BY HER DATE 5-12-39

ORDER No. H2222 H2232
SHEET No. 14

117480
HH110
PW# 36417

4-1-14
Machinery House Framing

Machinery House Framing

Ref. Dwg Sht PW#42885 (Sht E4)

Machinery House Framing

Arrangement

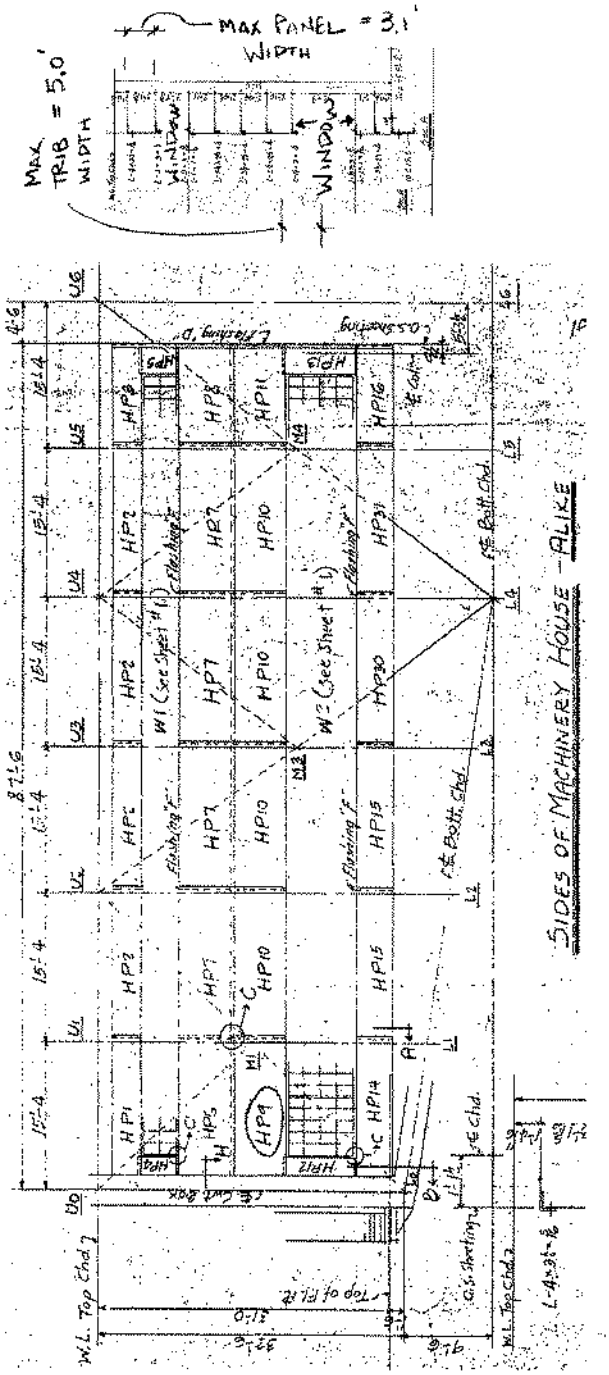

WIND PRESSURE

AT CORNER PANELS $A = 3 \times 15 = 45^{SF}$

$P = q(GC_p - GC_{pi})$ — ASCE 7-05 FIGURE 6-1A (EXTERNAL) FIGURE 6-5 (INTERNAL) SEC. 2.4.3

$= 28.8^{PSF}(-1.15 - 0.18)$ — CRITERIA PG 3

$= -38.3^{PSF}$ OUTWARD (INWARD DOES NOT CONTROL)

PANEL (10 GA STEEL $t = .135''$)

$m = 38.3^{PSF} \times 1' \times \frac{3.1^2}{10} = 37 \frac{\#\text{-Ft}}{\text{Ft}}$

$m_{bal\,Y} = \frac{33^{KSI}}{1.67} \times \frac{.135^2 \times 1''}{4} = 90 \frac{\#\text{-in}}{\text{in}}$

OK

GIRT (L4×3×1/4)

$M = \frac{38.3^{PSF}}{1000} \times 5.0' \times \frac{15.3^2}{8} = 5.6^{K\text{-}Ft}$

$f_b = \frac{5.6^{K\text{-}Ft} \times 12}{1.77^{in^3}_{Z_x}} = 38^{KSI} > 19.8^{KSI}\ .6 \times 33^{KSI}$

∴ SOME GIRTS WILL BE OVERSTRESSED & WILL LIKELY YIELD IN DESIGN STORM.

SEE NEXT PAGE FOR EVALUATION OF PANEL & STIFFENERS AS A CATENARY

MACHINERY HOUSE
FRAMING

CHECK PANEL AS A CATENARY BTWN FRAMES

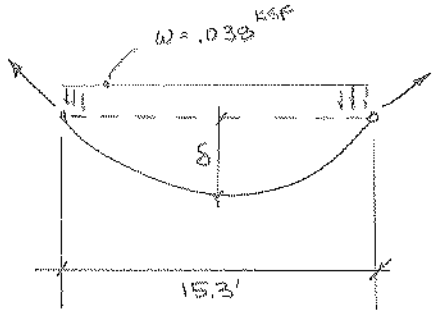

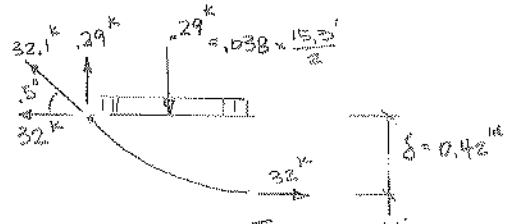

$T = 0.60 \times 33^{KSI} \times (.135'' \times 12'')$

$= 32^{K}$ ← PANEL ALLOW. TENSION

$\delta = \frac{WL^2}{8T}$

$= \frac{.038 \times 15.3^2}{8 \times 32^K} \times 12$

$= 0.42^{IN}$ AT ALLOW. PANEL TENSION

GIRT STRESS WHEN $\delta = 0.42^{IN}$

$\delta = \frac{\sigma L^2}{1200d} \rightarrow \sigma = \frac{1200d \times \delta}{L^2}$

$= \frac{1200 \times 4'' \times .42''}{15.3^2}$

$= 8.6^{KSI}$ OK

∴ PANEL & GIRT CAN SPAN BETWEEN FRAMES AS A CATENARY.

FIBERGLASS WINDOWS - NOT REVIEWED.

ROOF FRAMING - OK BY INSP.

PANEL-GIRT CONNECTION

SEE SECTION C ON SHT PW# 36599

3/8" ϕ BOLTS AT 20" O.C.

2'-11' MAX TRIBUTARY WIDTH
((5.0' WIDTH NOT USED AS WINDOW HAS ANOTHER SET OF BOLTS)

$P = .038^{KSF} \times 2.83' \times \frac{20''}{12} = 179^{\#}$ PER BOLT OK

GIRT-FRAME CONNECTION

2 RIVETS AT EACH CONN (SEE PHOTOS)

1 CLIP PER CONN.

$P_{RIVET} = \left[.038^{KSF} \times 5' \times 15.3'\right] \div 2$

$= 1.5^{K}$ PER RIVET OK

Main Wind Force Res. Sys. / Comp and Clad. – Method 2		All Heights
Figure 6-5	Internal Pressure Coefficient, GC_{pi}	**Walls & Roofs**
Enclosed, Partially Enclosed, and Open Buildings		

Enclosure Classification	GC_{pi}
Open Buildings	0.00
Partially Enclosed Buildings	+0.55 -0.55
Enclosed Buildings	+0.18 -0.18

Notes:

1. Plus and minus signs signify pressures acting toward and away from the internal surfaces, respectively.
2. Values of GC_{pi} shall be used with q_z or q_h as specified in 6.5.12.
3. Two cases shall be considered to determine the critical load requirements for the appropriate condition:

   (i) a positive value of GC_{pi} applied to all internal surfaces
   (ii) a negative value of GC_{pi} applied to all internal surfaces

Components and Cladding – Method 2		h ≤ 60 ft.
Figure 6-11A	External Pressure Coefficients, GC_p	Walls
Enclosed, Partially Enclosed Buildings		

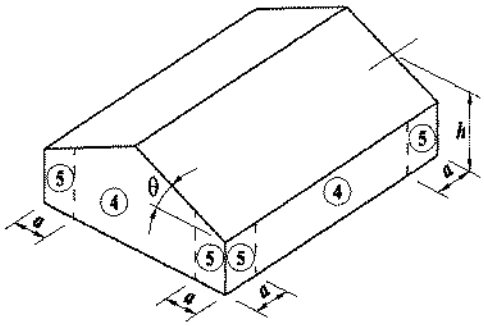

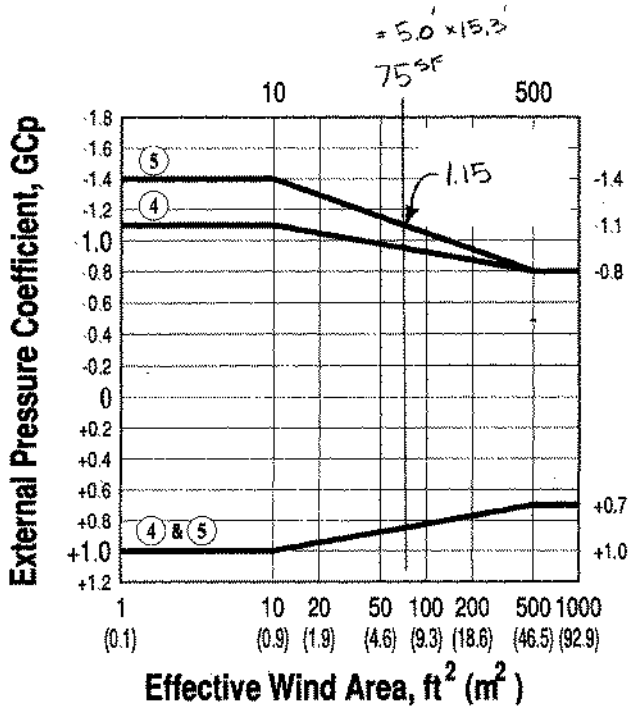

Notes:

1. Vertical scale denotes GC_p to be used with q_h.
2. Horizontal scale denotes effective wind area, in square feet (square meters).
3. Plus and minus signs signify pressures acting toward and away from the surfaces, respectively.
4. Each component shall be designed for maximum positive and negative pressures.
5. Values of GC_p for walls shall be reduced by 10% when $\theta \leq 10°$.
6. Notation:
   - *a*: 10 percent of least horizontal dimension or 0.4h, whichever is smaller, but not less than either 4% of least horizontal dimension or 3 ft (0.9 m).
   - *h*: Mean roof height, in feet (meters), except that eave height shall be used for $\theta \leq 10°$.
   - θ: Angle of plane of roof from horizontal, in degrees.

Machinery House Framing

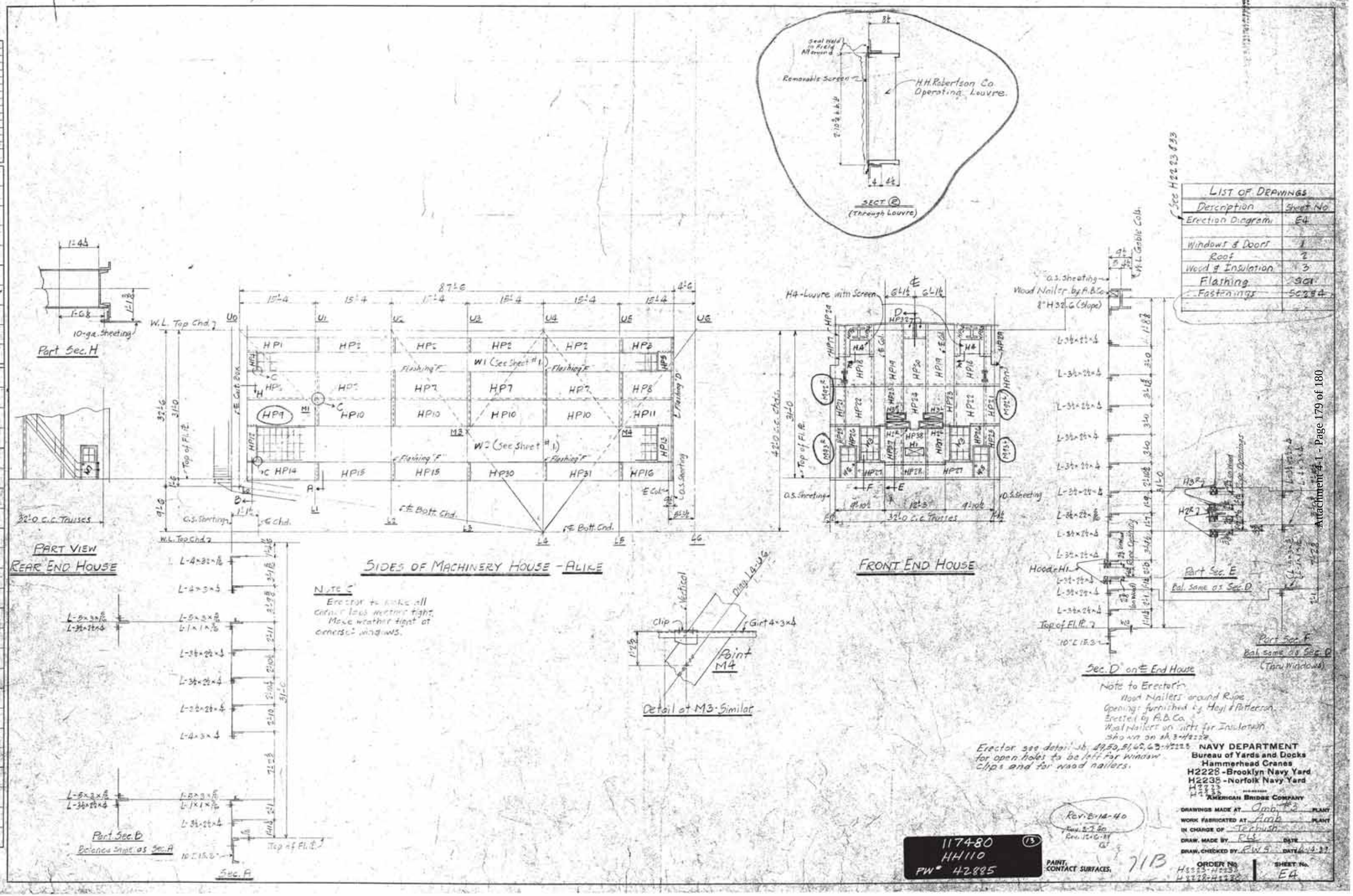
Part Sec. H
10-ga. Sheeting
PART VIEW
REAR END HOUSE
SIDES OF MACHINERY HOUSE - ALIKE
FRONT END HOUSE
SECT (2)
(Through Louvre)
Removable Screen
H.H. Robertson Co. Operating Louvre
Seal Weld in Field All around
H4-Louvre with Screen
Wood Nailer by A.B.Co.
Hood & H1
Part Sec. E
Bal. same as Sec. D
Part Sec. F
Bal. same as Sec. D
(Thru Windows)
Sec. D on ℄ End House
Part Sec. B
Balance same as Sec. A
Sec. A
Detail at M3 - Similar
Point M4
Clip
Girt 4×3×¼
Vertical
Diag. L4-U6
W.L. Top Chd.
Top of Fl. ℄
32'-0 c.c. Trusses
O.S. Sheeting
O.S. Shorting
℄ Bott. Chd.
℄ Chd.
℄ Gable Col.
Note 5
Erector to make all corner laps weather tight. Make weather tight at corners of windows.
Note to Erector:
Hood Nailers around Pipe Openings furnished by Heyl & Patterson. Erected by A.B.Co. Wood Nailers on shift for Insulation shown on sh. 3-H2228.
Erector see details sh. 49,50,51,62,63-H2228 for open holes to be left for window clips and for wood nailers.
LIST OF DRAWINGS
Description | Sheet No.
Erection Diagram | E4
Windows & Doors | 1
Roof | 2
Wood & Insulation | 3
Flashing | 5C1
Fastenings | 5C2&4
NAVY DEPARTMENT
Bureau of Yards and Docks
Hammerhead Cranes
H2228 - Brooklyn Navy Yard
H2235 - Norfolk Navy Yard
AMERICAN BRIDGE COMPANY
DRAWINGS MADE AT Amb. #3 PLANT
WORK FABRICATED AT Amb PLANT
IN CHARGE OF Tertush
DRAW. MADE BY RLS DATE
DRAW. CHECKED BY RWS DATE 4-4-33
ORDER No. H2223-H2233 H2228-H2238
SHEET No. E4
PAINT CONTACT SURFACES
117480 (13)
HH110
PW* 42885
Rev. B-14-40
Rev. 5-7-60
Rev. 12-6-61
71B

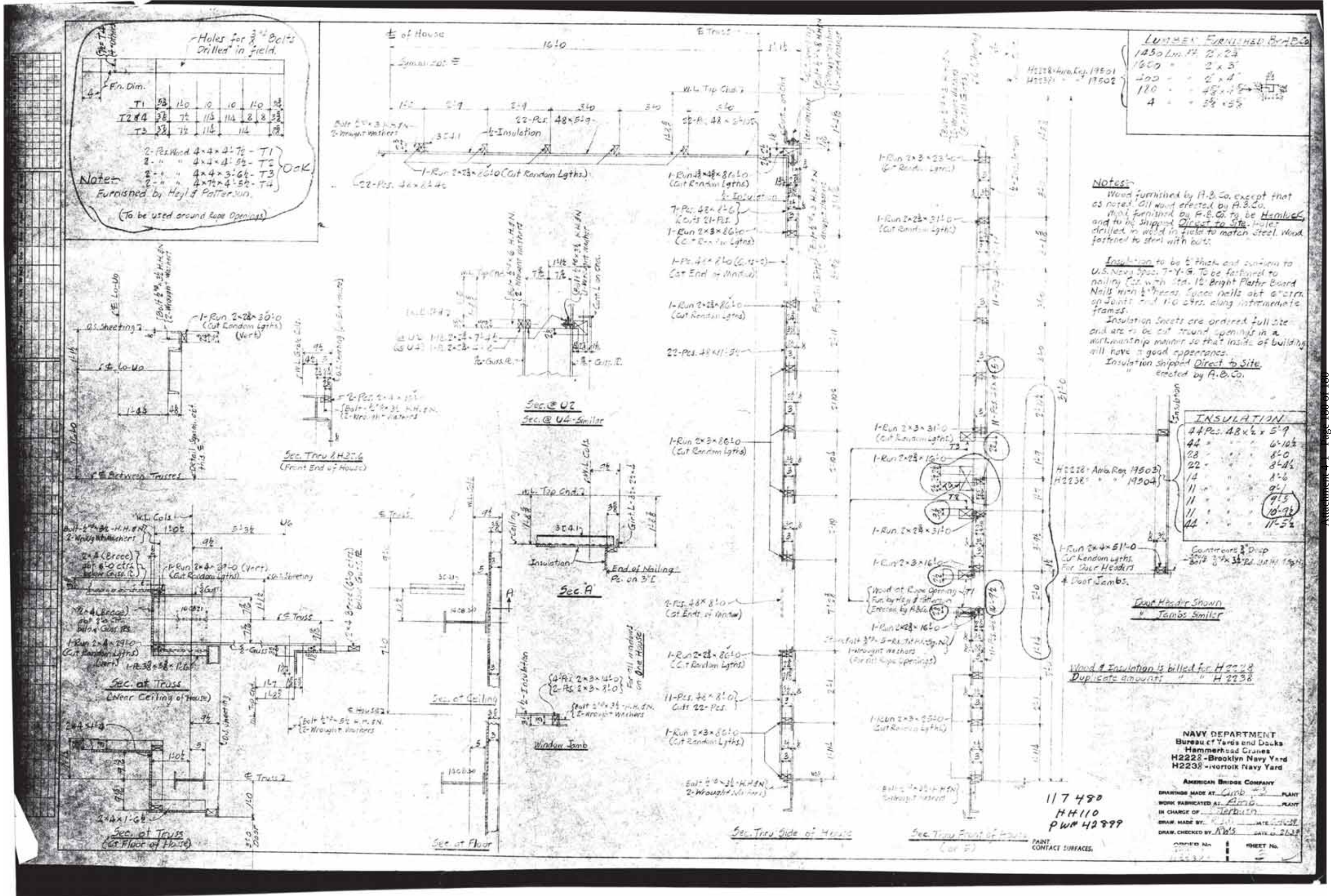
Holes for 3/4" Bolts Drilled in field.
Fn. Dim.
T1 5 1'-0 0 10 1'-0 5
T2 & 4 3 7 11 11 8 8 3
T3 3 7 11 11 3
2-Pcs. Wood 4×4×4'-7½ - T1
2-" " 4×4×4'-5½ - T2
2-" " 4×4×3'-6½ - T3
2-" " 4×7½×4'-5½ - T4
OOK
Notes:
Furnished by Heyl & Patterson.
(To be used around Rope Openings)
℄ of House
16'-0
Sym. about ℄
W.L. Top Chord
22-Pcs. 4×8×5'-9
½-Insulation
1-Run 2×2½×26'-0 (Cut Random Lgths.)
22-Pcs. 4×6×4'-6
1-Run 2×3×86'-0 (Cut Random Lgths)
7-Pcs. 4×2'-6
1-Run 2×3×86'-0 (Cut Random Lgths)
1-Pc. 4×2'-0 (Cut End of Window)
1-Run 2×2½×86'-0 (Cut Random Lgths)
22-Pcs. 4×4'-5½
1-Run 2×3×86'-0 (Cut Random Lgths)
2-Pcs. 4×8'-0 (Cut End of Window)
1-Run 2×2½×86'-0 (Cut Random Lgths)
11-Pcs. 4×8'-0 Cut 22-Pcs.
1-Run 2×3×86'-0 (Cut Random Lgths.)
Sec. Thru Side of House
Sec. Thru Front of House (Cor. F)
Sec. @ U2
Sec. @ U4-Similar
Sec. Thru 2H2'-6 (Front End of House)
Sec. at Truss (Near Ceiling of House)
Sec. at Truss (At Floor of House)
Sec. at Ceiling
Sec. at Floor
Sec. 'A'
Window Jamb
Insulation
End of Nailing Pc. on 3'E
For all windows on One House
Lumber Furnished by A.B.Co.
1450 Lin. Ft. 2½×2½
1600 " 2×3
400 " 2×4
120 " 4½×4½
4 " 5½×5½
Notes:
Wood furnished by A.B. Co. except that as noted. All wood erected by A.B.Co.
Wood furnished by A.B.Co. to be Hemlock, and to be shipped Direct to Site. Holes drilled in wood in field to match steel. Wood fastened to steel with bolts.
Insulation to be ½" thick and conform to U.S. Navy Spec. 7-Y-G. To be fastened to nailing Cut with Std. 1½" Bright Platter Board Nails with ½" heads. Space nails abt 6" ctrs. on Joints and 1'-0 ctrs. along intermediate frames.
Insulation Sheets are ordered full size and are to be cut around openings in a workmanship manner so that inside of building will have a good appearance.
Insulation shipped Direct to Site.
" erected by A.B.Co.
INSULATION
44 Pcs. 4'-8 × ½ × 5'-9
44 " " " 6'-10½
28 " " " 8'-0
22 " " " 8'-4½
14 " " " 8'-6
11 " " " 9'-1
11 " " " 9'-5
11 " " " 10'-9½
44 " " " 11'-5½
H2228 Amd. Req. 19501
H2238 " " 19502
H2228 Amd. Req. 19503
H2238 " " 19504
1-Run 2×4×51'-0 Cut Random Lgths. For Door Headers & Door Jambs.
Door Header Shown
" Jambs Similar
Wood & Insulation is billed for H2228
Duplicate amounts " " H2238
NAVY DEPARTMENT
Bureau of Yards and Docks
Hammerhead Cranes
H2228 - Brooklyn Navy Yard
H2238 - Norfolk Navy Yard
AMERICAN BRIDGE COMPANY
DRAWINGS MADE AT Carn. PLANT
WORK FABRICATED AT Amb. PLANT
IN CHARGE OF Terbush
DRAW. MADE BY
DRAW. CHECKED BY
ORDER No.
SHEET No.
117 480
HH110
PW# 42899
PAINT CONTACT SURFACES.

4-2
Supporting Documentation

4-2-1
AISC Historic Rolled Shapes

EXCERPT OF APPLICABLE SECTIONS

Historical Record

Dimensions and Properties

ROLLED SHAPES

Steel and Wrought Iron

BEAMS & COLUMNS

As Rolled in U.S.A., Period 1873 to 1952

With Sources as Noted

Compiled and Edited by

Herbert W. Ferris

AMERICAN INSTITUTE OF STEEL CONSTRUCTION

101 PARK AVENUE NEW YORK 17, N.Y.

AISC Historical Shapes 3rd Edition 1957

14" COLUMNS

REFERENCES, SEE COLUMN (1) AND PAGE 4

1,2,4,5,10 See Page 96
7,8,9,12,13, 14,15 See Page 95

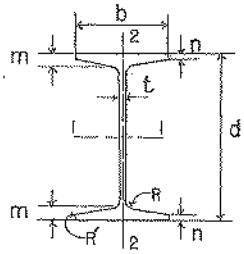

SECT. NO. OR NOM. SIZE	COL. (1)	WEIGHT PER FOOT Lb.	AREA Sq.In.	DEPTH d In.	FLANGE WIDTH b In.	WEB THICK t In.	DIMENSIONS m In.	n In.	R In.	R' In.	SLOPE INSIDE FLANGE %	AXIS 1—1 I In.⁴	S In.³	r In.	AXIS 2—2 I In.⁴	S In.³	r In.
H 14b	1	265.1	77.97	16.500	15.040	1.290	2.130	1.992	.60	0	2.0	3457.0	419.0	6.66	1153.3	153.4	3.85
CB 146 14X15	10	265.0	77.93	16.332	15.826	1.232	1.971	1.971	.65	0	0	3442.4	421.6	6.65	1304.2	164.8	4.09
14WF 14X16	7,8,9,13,14,15	264.0	77.63	16.500	16.025	1.205	1.938	1.938	.60	0	0	3526.0	427.4	6.74	1331.2	166.1	4.14
CB146N 14X16	12	264.0	77.62	16.500	16.026	1.206	1.938	1.938	.65	0	0	3525.4	427.3	6.74	1331.5	166.2	4.14
H 14	4	262.5	76.93	16.500	14.780	1.290	2.130	1.995	.60	0	2.0	3402.1	412.4	6.65	1095.6	148.3	3.77
H 14	5	262.0	77.20	16.375	15.450	1.230	2.067	1.925	.60	0	2.0	3413.4	416.9	6.65	1209.0	156.5	3.96
H 14	2	261.5	76.93	16.500	14.780	1.290	2.130	1.995	.60	0	2.0	3402.1	412.4	6.65	1095.6	148.3	3.77
H 14b	1	256.5	75.43	16.380	15.000	1.250	2.067	1.930	.60	0	2.0	3315.4	404.9	6.63	1108.7	147.8	3.83
CB 146 14X15	10	255.0	74.99	16.192	15.781	1.187	1.901	1.901	.65	0	0	3280.0	405.1	6.61	1247.1	158.0	4.08
CB146N 14X16	12	255.0	74.98	16.370	15.992	1.172	1.873	1.873	.65	0	0	3372.3	412.0	6.71	1278.6	159.9	4.13
14WF 14X16	7,8,13,15	255.0	74.98	16.370	15.990	1.170	1.873	1.873	.60	0	0	3372.6	412.0	6.71	1278.1	159.9	4.13
H 14	5	254.0	74.62	16.250	15.410	1.190	2.005	1.862	.60	0	2.0	3270.6	402.5	6.62	1161.2	150.7	3.94
H 14	4	254.0	74.43	16.380	14.740	1.250	2.067	1.933	.60	0	2.0	3262.7	398.5	6.62	1053.2	142.9	3.76
H 14	2	253.0	74.43	16.380	14.740	1.250	2.067	1.933	.60	0	2.0	3262.7	398.5	6.62	1053.2	142.9	3.76
H 14b	1	247.9	72.91	16.250	14.960	1.210	2.005	1.867	.60	0	2.0	3176.3	390.9	6.60	1064.7	142.3	3.82
CB146N 14X16	12	246.0	72.33	16.250	15.947	1.127	1.813	1.813	.65	0	0	3228.6	397.4	6.68	1227.1	153.9	4.12
14WF 14X16	7,8,9,13,14,15	246.0	72.33	16.250	15.945	1.125	1.813	1.813	.60	0	0	3228.9	397.4	6.68	1226.6	153.9	4.12
H 14	4	245.5	71.94	16.250	14.700	1.210	2.005	1.870	.60	0	2.0	3125.8	384.7	6.59	1011.3	137.6	3.5
CB 146 14X15	10	245.0	72.06	16.050	15.738	1.144	1.830	1.830	.65	0	0	3119.6	388.7	6.58	1190.6	151.3	4.06
H 14	5	245.0	72.05	16.125	15.370	1.150	1.942	1.800	.60	0	2.0	3130.4	388.3	6.59	1114.2	145.0	3.93
H 14	2	244.5	71.94	16.250	14.700	1.210	2.005	1.870	.60	0	2.0	3125.8	384.7	6.59	1011.3	137.6	3.75
H 14b	1	239.3	70.39	16.130	14.920	1.170	1.942	1.805	.60	0	2.0	3039.9	377.0	6.57	1021.4	136.9	3.81
14WF 14X16	7,8,9,13,14,15	237.0	69.69	16.120	15.910	1.090	1.748	1.748	.60	0	0	3080.9	382.2	6.65	1174.8	147.7	4.11
CB146N 14X16	12	237.0	69.68	16.120	15.911	1.091	1.748	1.748	.65	0	0	3080.2	382.2	6.65	1175.0	147.7	4.11
H 14	4	237.0	69.45	16.130	14.660	1.170	1.942	1.808	.60	0	2.0	2991.5	371.0	6.56	970.0	132.3	3.74
H 14	5	236.0	69.49	16.000	15.330	1.110	1.880	1.737	.60	0	2.0	2992.9	374.1	6.56	1067.8	139.3	3.92
H 14	2	236.0	69.45	16.130	14.660	1.170	1.942	1.808	.60	0	2.0	2991.5	371.0	6.56	970.0	132.3	3.74
CB 146 14X15	10	235.0	69.11	15.908	15.693	1.099	1.759	1.759	.65	0	0	2961.9	372.4	6.55	1134.5	144.6	4.05
H 14b	1	230.8	67.89	16.000	14.880	1.130	1.880	1.742	.60	0	2.0	2905.9	363.2	6.55	978.7	131.5	3.80
H 14	4	228.5	66.98	16.000	14.620	1.130	1.880	1.745	.60	0	2.0	2859.6	357.5	6.53	929.4	127.1	3.72
14WF 14X16	7,8,9,13,14	228.0	67.06	16.000	15.865	1.045	1.688	1.688	.60	0	0	2942.4	367.8	6.62	1124.8	141.8	4.10
CB146N 14X16	12	228.0	67.03	16.000	15.865	1.045	1.688	1.688	.65	0	0	2941.4	367.7	6.62	1124.7	141.8	4.10

AISC Historical Shapes 3rd Edition 1957

14" COLUMNS

REFERENCES; SEE COLUMN (1) AND PAGE 4

1,2,4,5,10 See Page 96
7,8,9,12,13, 14,15 See Page 95

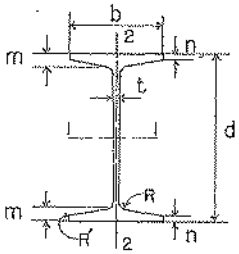

SECT. NO. OR NOM. SIZE	COL. (1)	WEIGHT PER FOOT	AREA	DEPTH d	FLANGE WIDTH b	WEB THICK t	DIMENSIONS m	n	R	R'	SLOPE INSIDE FLANGE	AXIS 1—1 I	S	r	AXIS 2—2 I	S	r
		Lb.	Sq In.	In.	In.	In.	In.	In.	In.	In.	%	In.⁴	In.³	In.	In.⁴	In.³	In.
H 14	2	227.5	66.98	16.000	14.620	1.130	1.880	1.745	.60	0	2.0	2859.6	357.5	6.53	929.4	127.1	3.72
H 14	5	227.0	66.94	15.875	15.290	1.070	1.817	1.675	.60	0	2.0	2857.8	360.0	6.53	1022.0	133.7	3.91
CB 146 14X15	10	225.0	66.17	15.764	15.650	1.056	1.687	1.687	.65	0	0	2806.2	356.0	6.51	1079.1	137.9	4.04
H 14a	1	222.3	65.39	15.880	14.840	1.090	1.817	1.680	.60	0	2.0	2774.5	349.5	6.51	936.6	126.2	3.78
H 14	4	220.5	64.52	15.880	14.580	1.090	1.817	1.683	.60	0	2.0	2730.2	344.0	6.51	889.3	122.0	3.71
H 14	2	219.5	64.52	15.880	14.580	1.090	1.817	1.683	.60	0	2.0	2730.2	344.0	6.51	889.3	122.0	3.71
H 14d	7	219.0	64.44	15.870	15.830	1.010	1.623	1.623	.60	0	0	2799.9	352.8	6.59	1074.2	135.7	4.08
CB146N 14X16	12	219.0	64.42	15.870	15.830	1.010	1.623	1.623	.65	0	0	2798.8	352.7	6.59	1074.2	135.7	4.08
H 14	5	219.0	64.40	15.750	15.250	1.030	1.755	1.612	.60	0	2.0	2725.3	346.1	6.51	976.9	128.1	3.89
14WF 14X16	8,9,13,14,15	219.0	64.36	15.870	15.825	1.005	1.623	1.623	.60	0	0	2798.2	352.6	6.59	1073.2	135.6	4.08
CB 146 14X15	10	215.0	63.23	15.622	15.604	1.010	1.616	1.616	.65	0	0	2654.7	339.9	6.48	1024.5	131.3	4.03
H 14a	1	214.4	63.07	15.750	14.810	1.060	1.755	1.617	.60	0	2.0	2648.7	336.3	6.48	897.0	121.1	3.77
H 14	4	212.0	62.07	15.750	14.540	1.050	1.755	1.620	.60	0	2.0	2603.3	330.6	6.48	849.8	116.9	3.70
14WF 14X16	7,8,9,13,14,15	211.0	62.07	15.750	15.800	.980	1.563	1.563	.60	0	0	2671.4	339.2	6.56	1028.6	130.2	4.07
H 14	2	211.0	62.07	15.750	14.540	1.050	1.755	1.620	.60	0	2.0	2603.3	330.6	6.48	849.8	116.9	3.70
CB146N 14X16	12	211.0	62.04	15.750	15.800	.980	1.563	1.563	.65	0	0	2670.4	339.1	6.56	1028.6	130.2	4.07
H 14	5	210.0	61.86	15.625	15.210	.990	1.692	1.550	.60	0	2.0	2595.4	332.2	6.48	932.4	122.6	3.88
H 14a	1	206.0	60.59	15.630	14.770	1.020	1.692	1.555	.60	0	2.0	2522.1	322.8	6.45	856.0	115.9	3.76
CB 146 14X15	10	205.0	60.28	15.478	15.559	.965	1.544	1.544	.65	0	0	2505.0	323.7	6.45	970.3	124.7	4.01
H 14	4	204.5	59.78	15.630	14.510	1.02	1.692	1.558	.60	0	2.0	2481.9	317.7	6.44	812.6	112.0	3.69
H 14	2	203.5	59.78	15.630	14.510	1.02	1.692	1.558	.60	0	2.0	2481.9	317.7	6.44	812.6	112.0	3.69
H 14	5	202.0	59.50	15.500	15.180	.96	1.630	1.487	.60	0	2.0	2470.9	318.8	6.44	890.3	117.3	3.87
14WF 14X16	7,8,9,13,14,15	202.0	59.39	15.630	15.750	.930	1.503	1.503	.60	0	0	2538.8	324.9	6.54	979.7	124.4	4.06
CB146N 14X16	12	202.0	59.38	15.630	15.751	.931	1.503	1.503	.65	0	0	2538.1	324.8	6.54	979.8	124.4	4.06
H 14a	1	197.6	58.12	15.50	14.73	.98	1.630	1.492	.60	0	2.0	2397.9	309.3	6.42	815.6	110.7	3.75
H 14	4	196.0	57.35	15.500	14.470	.980	1.630	1.495	.60	0	2.0	2359.7	304.5	6.41	774.2	107.0	3.68
H 14	2	195.0	57.35	15.500	14.470	.980	1.630	1.495	.60	0	2.0	2359.7	304.5	6.41	774.2	107.	3.68
CB 146 14X15	10	195.0	57.34	15.334	15.513	.919	1.472	1.472	.65	0	0	2358.2	307.6	6.41	916.8	118.2	4.00
H 14	5	194.0	56.99	15.375	15.140	.920	1.567	1.425	.60	0	2.0	2345.8	305.1	6.42	846.9	111.9	3.86
CB146N 14X16	12	193.0	56.75	15.500	15.713	.893	1.438	1.438	.65	0	0	2402.3	310.0	6.51	930.6	118.5	4.05
14WF 14X16	7,8,9,13,14,15	193.0	56.73	15.500	15.710	.890	1.438	1.438	.60	0	0	2402.4	310.0	6.51	930.1	118.4	4.05
H 14a	1	189.3	55.67	15.380	14.690	.940	1.567	1.430	.60	0	2.0	2276.1	296.1	6.39	775.8	105.6	3.73
H 14	4	187.5	54.92	15.380	14.430	.940	1.567	1.433	.60	0	2.0	2239.8	291.4	6.39	736.3	102.1	3.66

AISC Historical Shapes 3rd Edition 1957

14" COLUMNS

REFERENCES; SEE COLUMN (1) AND PAGE 4

1,2,4,5,10 See Page 96
7,8,9,12,13,14,15 See Page 95

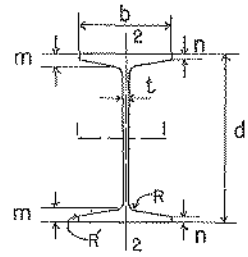

SECT. NO. OR NOM. SIZE	COL. (1)	WEIGHT PER FOOT	AREA	DEPTH	FLANGE WIDTH	WEB THICK	DIMENSIONS				SLOPE INSIDE FLANGE	AXIS 1—1			AXIS 2—2		
				d	b	t	m	n	R	R'		I	S	r	I	S	r
		Lb.	Sq. In.	In.	In.	In.	In.	In.	In.	In.	%	In.⁴	In.³	In.	In.⁴	In.³	In.
H 14	2	186.5	54.92	15.380	14.430	.940	1.567	1.433	.60	0	2.0	2239.8	291.4	6.39	736.3	102.1	3.66
H 14	5	185.0	54.48	15.250	15.100	.680	1.505	1.362	.60	0	2.0	2223.0	291.5	6.39	804.2	106.5	3.84
CB 146 14X15	10	185.0	54.41	15.188	15.469	.875	1.399	1.399	.65	0	0	2213.5	291.5	6.38	863.9	111.7	3.98
H 14d	7	184.0	54.15	15.380	15.665	.645	1.378	1.378	.60	0	0	2276.4	296.0	6.48	883.6	112.8	4.04
CB 146N 14X16	12	184.0	54.12	15.380	15.665	.845	1.378	1.378	.65	0	0	2275.3	295.9	6.48	883.6	112.8	4.04
14WF 14X16	8,9,13,14,15	184.0	54.07	15.380	15.660	.840	1.378	1.378	.60	0	0	2274.8	295.8	6.49	882.7	112.7	4.04
H 14a	1	180.9	53.22	15.250	14.650	.900	1.505	1.367	.60	0	2.0	2156.7	282.8	6.37	736.5	100.5	3.72
H 14	4	179.5	52.51	15.250	14.390	.900	1.505	1.370	.60	0	2.0	2122.3	278.3	6.36	699.0	97.2	3.65
H 14	2	178.5	52.51	15.250	14.390	.900	1.505	1.370	.60	0	2.0	2122.3	278.3	6.36	699.0	97.2	3.65
H 14	5	177.0	51.99	15.125	15.060	.840	1.442	1.300	.60	0	2.0	2102.6	278.0	6.36	762.1	101.2	3.83
CB 146N 14X16	12	176.0	51.73	15.250	15.642	.822	1.313	1.313	.65	0	0	2149.1	281.9	6.45	838.2	107.2	4.03
14WF 14X16	7,8,9,13,14,15	176.0	51.73	15.250	15.640	.820	1.313	1.313	.60	0	0	2149.6	281.9	6.45	837.9	107.1	4.02
CB 146 14X15	10	175.0	51.47	15.042	15.424	.830	1.326	1.326	.65	0	0	2071.7	275.5	6.34	811.6	105.2	3.97
H 14a	1	172.7	50.78	15.130	14.610	.860	1.442	1.305	.60	0	2.0	2039.5	269.7	6.34	697.9	95.5	3.71
H 14	4	171.5	50.11	15.130	14.350	.860	1.442	1.308	.60	0	2.0	2007.0	265.4	6.33	662.3	92.3	3.64
H 14	2	170.5	50.11	15.130	14.350	.860	1.442	1.308	.60	0	2.0	2007.0	265.4	6.33	662.3	92.3	3.64
H 14	5	168.0	49.51	15.000	15.020	.800	1.380	1.237	.60	0	2.0	1984.6	264.6	6.33	720.6	96.0	3.82
CB 146N 14X16	12	167.0	49.10	15.120	15.602	.782	1.248	1.248	.65	0	0	2020.4	267.2	6.41	790.5	101.3	4.01
14WF 14X16	7,8,9,13,14,15	167.0	49.09	15.120	15.600	.780	1.248	1.248	.60	0	0	2020.8	267.3	6.42	790.2	101.3	4.01
CB 146 14X15	10	165.0	48.52	14.896	15.377	.783	1.253	1.253	.65	0	0	1932.6	259.5	6.31	759.9	98.8	3.96
H 14a	1	164.4	48.36	15.000	14.570	.820	1.380	1.242	.60	0	2.0	1924.7	256.6	6.32	659.8	90.6	3.69
H 14	4	163.0	47.71	15.000	14.310	.820	1.380	1.245	.60	0	2.0	1894.0	252.5	6.30	626.1	87.5	3.62
H 14	1	162.2	47.71	15.000	14.310	.820	1.380	1.245	.60	0	2.0	1894.0	252.5	6.31	625.1	87.4	3.62
H 14	2	162.0	47.71	15.000	14.310	.820	1.380	1.245	.60	0	2.0	1894.0	252.5	6.30	626.1	87.5	3.62
H 14	5	161.0	47.33	14.875	15.000	.760	1.317	1.175	.60	0	2.0	1874.4	252.0	6.29	682.5	91.0	3.80
14WF 14X16	7,8,9,13,14,15	158.0	46.47	15.000	15.550	.730	1.188	1.188	.60	0	0	1900.6	253.4	6.40	745.0	95.8	4.00
CB 146N 14X16	12	158.0	46.44	15.000	15.550	.730	1.188	1.188	.65	0	0	1899.6	253.3	6.40	745.0	95.8	4.01
H 14	5	155.0	45.62	14.875	14.270	.780	1.317	1.183	.60	0	2.0	1793.8	241.2	6.27	590.6	82.8	3.60
CB 146 14X15	10	155.0	45.58	14.750	15.330	.736	1.180	1.180	.65	0	0	1796.8	243.6	6.28	709.0	92.5	3.94
H 14	4	155.0	45.33	14.880	14.270	.780	1.317	1.183	.60	0	2.0	1783.3	239.8	6.27	590.5	82.8	3.61
H 14	1	154.1	45.33	14.880	14.270	.780	1.317	1.183	.60	0	2.0	1783.3	239.8	6.27	589.5	82.6	3.61
H 14	2	154.0	45.33	14.880	14.270	.780	1.317	1.183	.60	0	2.0	1783.3	239.8	6.27	589.5	82.6	3.61
H 14	7	153.0	45.01	15.000	14.830	.750	1.188	1.188	.60	0	0	1822.2	243.0	6.36	646.3	87.2	3.79
CB 145N 14X14½	12	153.0	44.98	15.000	14.828	.750	1.188	1.188	.65	0	0	1820.9	242.8	6.36	646.0	87.1	3.79

AISC Historical Shapes 3rd Edition 1957

14" COLUMNS

REFERENCES; SEE COLUMN (1) AND PAGE 4

6
S35-1930
1,2,4,5,10
See Page 96
7,8,9,12,13,
14,15
See Page 95

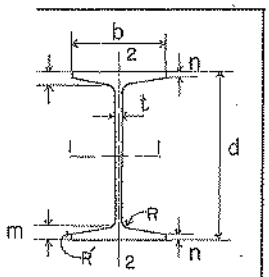

SECT. NO. OR NOM. SIZE	COL. (1)	WEIGHT PER FOOT	AREA	DEPTH	FLANGE WIDTH	WEB THICK	DIMENSIONS				SLOPE INSIDE FLANGE	AXIS 1—1			AXIS 2—2		
				d	b	t	m'	n	R	R'		I	S	r	I	S	r
		Lb.	Sq.In.	In.	In.	In.	In.	In.	In.	In.	%	In.⁴	In.³	In.	In.⁴	In.³	In.
H14d 7		150.0	44.16	14.88	15.520	.700	1.128	1.128	.60	0	0	1788.3	240.4	6.36	703.2	90.6	3.99
CB146N 12 14X16		150.0	44.13	14.880	15.520	.700	1.128	1.128	.65	0	0	1787.2	240.2	6.36	703.2	90.6	3.99
14WF 14X16 8,9,13,14,15		150.0	44.08	14.880	15.515	.695	1.128	1.128	.60	0	0	1786.9	240.2	6.37	702.5	90.6	3.99
H14b 6		149.0	43.82	14.125	14.900	1.410	.942	.808	.60	0	2.0	1379.1	195.3	5.61	468.8	62.9	3.27
H14b 4		149.0	43.52	14.125	14.900	1.410	.942	.808	.60	0	2.0	1368.5	193.8	5.61	468.8	62.9	3.28
H14c 1		148.0	43.52	14.125	14.900	1.410	.942	.808	.60	0	2.0	1368.5	193.8	5.61	468.6	62.9	3.28
H14 5		147.0	43.25	14.750	14.230	.740	1.255	1.120	.60	0	2.0	1685.3	228.5	6.24	555.5	78.1	3.58
H14 4		147.0	42.95	14.750	14.230	.740	1.255	1.120	.60	0	2.0	1674.7	227.1	6.24	554.4	78.1	3.60
H14 1,2		146.0	42.95	14.750	14.230	.740	1.255	1.120	.60	0	2.0	1674.7	227.1	6.24	554.4	77.9	3.59
H14 7		145.0	42.64	14.680	14.790	.710	1.128	1.128	.60	0	0	1711.9	230.1	6.34	608.7	82.3	3.78
CB146 10 14X15		145.0	42.64	14.602	15.284	.690	1.106	1.106	.65	0	0	1662.7	227.7	6.24	658.5	86.2	3.93
CB145N 12 14X14 1/2		145.0	42.62	14.880	14.789	.711	1.128	1.128	.65	0	0	1710.9	230.0	6.34	608.5	82.3	3.78
14WF 14X16 7,8,9,13,14,15		142.0	41.85	14.750	15.500	.680	1.063	1.063	.60	0	0	1672.2	226.7	6.32	660.1	85.2	3.97
CB146N 12 14X16		142.0	41.76	14.746	15.500	.680	1.061	1.061	.65	0	0	1667.8	226.2	6.32	658.9	85.0	3.97
H14 5		139.0	40.88	14.625	14.190	.700	1.192	1.058	.60	0	2.0	1578.9	215.9	6.21	520.9	73.4	3.57
H14 4		139.0	40.59	14.630	14.190	.700	1.192	1.058	.60	0	2.0	1568.4	214.5	6.21	520.9	73.4	3.58
H14 1,2		138.0	40.59	14.630	14.190	.700	1.192	1.058	.60	0	2.0	1568.4	214.5	6.21	519.7	73.3	3.58
14WF 14X14 1/2 7,8,9,13,14,15		136.0	39.98	14.750	14.740	.660	1.063	1.063	.60	0	0	1593.0	216.0	6.31	567.7	77.0	3.77
CB145N 12 14X14 1/2		136.0	39.98	14.750	14.740	.662	1.063	1.063	.65	0	0	1592.3	215.9	6.31	567.7	77.0	3.77
CB146 10 14X15		135.0	39.70	14.452	15.239	.645	1.031	1.031	.65	0	0	1530.4	211.8	6.21	608.4	79.9	3.92
H14 5		131.5	38.68	14.500	14.160	.670	1.130	.995	.60	0	2.0	1477.3	203.8	6.18	488.0	68.9	3.55
H14 4		131.5	38.38	14.500	14.160	.670	1.130	.995	.60	0	2.0	1466.7	202.3	6.18	487.9	68.9	3.57
CB146 10 14X15		131.0	38.52	14.162	15.468	.874	.886	.886	.65	0	0	1358.4	191.8	5.94	547.3	70.8	3.77
H14 1,2		130.5	38.38	14.500	14.160	.670	1.130	.995	.60	0	2.0	1466.7	202.3	6.18	486.9	68.8	3.56
CB145N 12 14X14 1/2		127.0	37.33	14.620	14.690	.612	.998	.998	.65	0	0	1476.0	201.9	6.29	527.6	71.8	3.76
14WF 14X14 1/2 7,8,9,13,14,15		127.0	37.33	14.620	14.690	.610	.998	.998	.60	0	0	1476.7	202.0	6.29	527.6	71.8	3.76
CB146 10 14X15		125.0	36.75	14.304	15.191	.597	.957	.957	.65	0	0	1402.1	196.0	6.18	559.4	73.7	3.90
H14 5		123.5	36.33	14.375	14.120	.630	1.067	.933	.60	0	2.0	1375.1	191.3	6.15	454.4	64.4	3.54
H14 4		123.5	36.04	14.380	14.120	.630	1.067	.933	.60	0	2.0	1364.6	189.9	6.16	454.4	64.4	3.55
H14 1,2		122.5	36.04	14.380	14.120	.630	1.067	.933	.60	0	2.0	1364.6	189.9	6.16	453.4	64.2	3.55
14WF 14X14 1/2 7,8,9,13,14,15		119.0	34.99	14.500	14.650	.570	.938	.938	.60	0	0	1373.1	189.4	6.26	491.8	67.1	3.75
CB145N 12 14X14 1/2		119.0	34.97	14.500	14.649	.571	.938	.938	.65	0	0	1372.2	189.3	6.26	491.7	67.1	3.75

AISC Historical Shapes 3rd Edition 1957

14" BEAMS

REFERENCES; SEE COLUMN (1) AND PAGE 4

6	6	7	9	11	11
B14d, 14X14½	14WF B14d, 14X14½	C1927	C1931	CB145, 14X14½	14WF CB145, 14X14½
B14c, 14X12	14WF B14c, 14X12	C1928	IL1932	CB144, 14X12	14WF CB144, 14X12
B14b, 14X10	14WF B14b, 14X10	C1929		CB143, 14X10	14WF CB143, 14X10
B14a, 14X8	14WF B14a, 14X8	C1930		CB142, 14X8	14WF CB142, 14X8
B14, 14X6¾	14WF B14, 14X6¾	S		CB141, 14X6¾	14WF CB141, 14X6¾
S43-1933	S51-1938	C1928		C1933	CIL1940
S47-1934	S53-1943	C1929		C1934	CIL1946
	S54-1946	C1930		IL1934	CIL1948
	S56-1948				UB1950

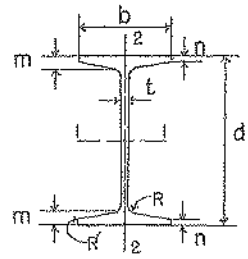

SECT. NO. OR NOM. SIZE	COL. (1)	WEIGHT PER FOOT	AREA	DEPTH d	FLANGE WIDTH b	WEB THICK t	DIMENSIONS m	n	R	R'	SLOPE INSIDE FLANGE	AXIS 1—1 I	S	r	AXIS 2—2 I	S	r
		Lb.	Sq. in.	In.	In.	In.	In.	In.	In.	In.	%	In.⁴	In.³	In.	In.⁴	In.³	In.
14WF 11 CB145 14X14½		136.0	39.98	14.750	14.740	.660	1.063	1.063	.60	0	0	1593.0	216.0	6.31	567.7	77.0	3.77
14WF 6 B14d 14X14½		136.0	39.98	14.750	14.740	.660	1.063	1.063	.60	0	0	1593.0	216.0	6.31	567.7	77.0	3.77
CB145N 9 14X14½		136.0	39.98	14.750	14.740	.662	1.063	1.063	.65	0	0	1592.3	215.9	6.31	567.7	77.0	3.77
CB146 7 14X16		135.0	39.70	14.452	15.239	.645	1.031	1.031	.65	0	0	1530.4	211.8	6.21	608.4	79.9	3.92
CB145N 9 14X14½		127.0	37.33	14.620	14.690	.612	.998	.998	.65	0	0	1476.0	201.9	6.29	527.6	71.8	3.76
14WF 11 CB145 14X14½		127.0	37.33	14.620	14.690	.610	.998	.998	.60	0	0	1476.7	202.0	6.29	527.6	71.8	3.76
14WF 6 B14d 14X14½		127.0	37.33	14.620	14.690	.610	.998	.998	.60	0	0	1476.7	202.0	6.29	527.6	71.8	3.76
CB146 7 14X15		125.0	36.75	14.304	15.191	.697	.957	.957	.65	0	0	1402.1	196.0	6.18	559.4	73.7	3.90
14WF 11 CB145 14X14½		119.0	34.99	14.500	14.650	.570	.938	.938	.60	0	0	1373.1	189.4	6.26	491.8	67.1	3.75
14WF 6 B14d 14X14½		119.0	34.99	14.500	14.650	.570	.938	.938	.60	0	0	1373.1	189.4	6.26	491.8	67.1	3.75
CB145N 9 14X14½		119.0	34.97	14.500	14.649	.571	.938	.938	.65	0	0	1372.2	189.3	6.26	491.7	67.1	
CB146 7 14X15		115.0	33.82	14.154	15.145	.551	.882	.882	.65	0	0	1275.9	180.3	6.14	510.9	67.5	
14WF 6 B14d 14X14½		111.0	32.65	14.370	14.620	.540	.873	.873	.60	0	0	1266.5	176.3	6.23	454.9	62.2	3.73
14WF 11 CB145 14X14½		111.0	32.65	14.370	14.620	.540	.873	.873	.60	0	0	1266.5	176.3	6.23	454.9	62.2	3.73
CB145N 9 14X14½		111.0	32.62	14.370	14.618	.540	.873	.873	.65	0	0	1265.3	176.1	6.23	454.7	62.2	3.73
CB146 8 14X15		106.0	31.18	14.018	15.103	.509	.814	.814	.65	0	0	1164.1	166.1	6.11	467.6	61.9	3.87
CB145 7 14X12		105.0	30.88	14.370	12.101	.536	.990	.990	.65	0	0	1169.6	162.8	6.15	292.6	48.4	3.08
CB145N 9 14X14½		103.0	30.27	14.250	14.576	.498	.813	.813	.65	0	0	1165.4	163.6	6.20	419.8	57.6	3.72
14WF 11 CB145 14X14½		103.0	30.26	14.250	14.575	.495	.813	.813	.60	0	0	1165.8	163.6	6.21	419.7	57.6	3.72
14WF 6 B14d 14X14½		103.0	30.26	14.250	14.575	.495	.813	.813	.60	0	0	1165.8	163.6	6.21	419.7	57.6	3.72
CB146 8 14X15		96.0	28.23	13.866	15.056	.462	.738	.738	.65	0	0	1042.1	150.3	6.08	419.9	55.8	3.86

AISC Historical Shapes 3rd Edition 1957

14" BEAMS

REFERENCES, SEE COLUMN (1) AND PAGE 4

6,7,8,9,11
See Page 67

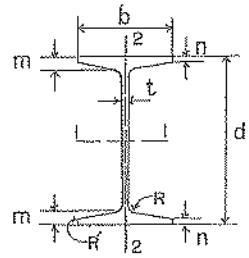

SECT. NO. OR NOM. SIZE	COL. (1)	WEIGHT PER FOOT Lb.	AREA Sq.In.	DEPTH d In.	FLANGE WIDTH b In.	WEB THICK t In.	DIMENSIONS m In.	n In.	R In.	R' In.	SLOPE INSIDE FLANGE %	AXIS 1—1 I In.⁴	S In.³	r In.	AXIS 2—2 I In.⁴	S In.³	r In.
14WF CB145 14X14½	11	95.0	27.94	14.120	14.545	.465	.748	.748	.60	0	0	1063.5	150.6	6.17	383.7	52.8	3.71
14WF B14d 14X14½	6	95.0	27.94	14.120	14.545	.465	.748	.748	.60	0	0	1063.5	150.6	6.17	383.7	52.8	3.71
CB145 14X12	7	95.0	27.93	14.186	12.050	.485	.898	.898	.65	0	0	1044.0	147.2	6.11	262.0	43.5	3.06
CB145N 14X14½	9	95.0	27.92	14.120	14.544	.466	.748	.748	.65	0	0	1062.5	150.5	6.17	383.7	52.8	3.71
CB145N 14X14½	9	87.0	25.56	14.000	14.500	.422	.688	.688	.65	0	0	966.2	138.0	6.15	349.7	48.2	3.70
14WF B14d 14X14½	6	87.0	25.56	14.000	14.500	.420	.688	.688	.60	0	0	966.9	138.1	6.15	349.7	48.2	3.70
14WF CB145 14X14½	11	87.0	25.56	14.000	14.500	.420	.688	.688	.60	0	0	966.9	138.1	6.15	349.7	48.2	3.70
CB146 14X15	8	86.0	25.28	13.714	15.008	.414	.662	.662	.65	0	0	923.0	134.6	6.04	373.1	49.7	3.84
CB145 14X12	7	85.0	24.99	14.000	12.000	.435	.805	.805	.65	0	0	921.3	131.6	6.07	232.0	38.7	3.05
14WF CB144 14X12	11	84.0	24.71	14.180	12.023	.451	.778	.778	.60	0	0	928.4	130.9	6.13	225.5	37.5	3.02
14WF B14c 14X12	6	84.0	24.71	14.180	12.023	.451	.778	.778	.60	0	0	928.4	130.9	6.13	225.5	37.5	3.02
CB144N 14X12	9	84.0	24.68	14.180	12.021	.451	.778	.778	.65	0	0	927.2	130.8	6.13	225.4	37.5	3.02
CB144N 14X12	9	78.0	22.94	14.060	12.000	.430	.718	.718	.65	0	0	850.5	121.0	6.09	206.9	34.5	3.00
14WF CB144 14X12	11	78.0	22.94	14.060	12.000	.428	.718	.718	.60	0	0	851.2	121.1	6.09	206.9	34.5	3.00
14WF B14c 14X12	6	78.0	22.94	14.060	12.000	.428	.718	.718	.60	0	0	851.2	121.1	6.09	206.9	34.5	3.00
CB144 14X10	7	75.0	22.05	14.382	10.086	.468	.786	.786	.55	0	0	823.5	114.5	6.11	134.5	26.7	2.47
14WF CB143 14X10	11	74.0	21.76	14.190	10.072	.450	.783	.783	.60	0	0	796.8	112.3	6.05	133.5	26.5	2.48
14WF B14b 14X10	6	74.0	21.76	14.190	10.072	.450	.783	.783	.60	0	0	796.8	112.3	6.05	133.5	26.5	2.48
CB143N 14X10	9	74.0	21.75	14.190	10.071	.451	.783	.783	.65	0	0	795.9	112.2	6.05	133.4	26.5	2.48
CB143N 14X10	9	68.0	20.00	14.060	10.040	.420	.718	.718	.65	0	0	723.4	103.0	6.01	121.2	24.1	2.46
14WF CB143 14X10	11	68.0	20.00	14.060	10.040	.418	.718	.718	.60	0	0	724.1	103.0	6.02	121.2	24.1	2.46
14WF B14b 14X10	6	68.0	20.00	14.060	10.040	.418	.718	.718	.60	0	0	724.1	103.0	6.02	121.2	24.1	2.46
CB144 14X10	7	68.0	19.99	14.238	10.043	.425	.714	.714	.55	0	0	738.8	103.8	6.08	120.6	24.0	2.46

AISC Historical Shapes 3rd Edition 1957

14" BEAMS

REFERENCES; SEE COLUMN (1) AND PAGE 4

5	10	6,7,9,11
B14a, 14X8 B14, 14X6¾ S43- 1933 S47- 1934 14WF B14a, 14X8 14WF B14, 14X6¾ S51- 1938 S53- 1943	CB142, 14X8 CB141, 14X6¾ G1933 G1934 LL1934 14WF CB142, 14X8 14WF CB141, 14X6¾ GIL 1940	See Page 67

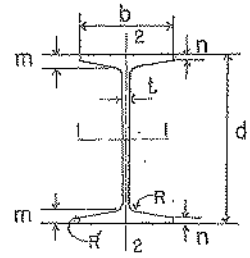

SECT. NO. OR NOM. SIZE	COL. (1)	WEIGHT PER FOOT Lb.	AREA Sq. In.	DEPTH d In.	FLANGE WIDTH b In.	WEB THICK t In.	DIMENSIONS m In.	n In.	R In.	R′ In.	SLOPE INSIDE FLANGE %	AXIS 1—1 I In.⁴	S In.³	r In.	AXIS 2—2 I In.⁴	S In.³	r In.
CB144 14X10	7	61.0	17.94	14.094	10.000	.382	.642	.642	.55	0	0	656.2	93.1	6.05	107.1	21.4	2.44
CB143N 14X10	9	61.0	17.94	13.910	10.000	.380	.643	.643	.65	0	0	640.8	92.1	5.98	107.3	21.5	2.45
14WF CB143 14X10	11	61.0	17.94	13.910	10.000	.378	.643	.643	.60	0	0	641.5	92.2	5.98	107.3	21.5	2.45
14WF B14b 14X10	6	61.0	17.94	13.910	10.000	.378	.643	.643	.60	0	0	641.5	92.2	5.98	107.3	21.5	2.45
CB143 14X8	7	58.0	17.05	14.242	8.070	.413	.716	.716	.55	0	0	609.4	85.6	5.98	62.8	15.6	1.92
14WF CB142 14X8	10	58.0	17.06	14.060	8.098	.406	.718	.718	.60	0	0	597.9	85.0	5.92	63.7	15.7	1.93
14WF B14a 14X8	5	58.0	17.06	14.060	8.098	.406	.718	.718	.60	0	0	597.9	85.0	5.92	63.7	15.7	1
CB142N 14X8	9	58.0	17.03	14.060	8.096	.406	.718	.718	.65	0	0	596.7	84.9	5.92	63.6	15.7	1
CB143 14X8	7	53.0	15.59	14.122	8.035	.378	.656	.656	.55	0	0	552.5	78.2	5.95	56.8	14.1	1.91
14WF CB142 14X8	11	53.0	15.59	13.940	8.062	.370	.658	.658	.60	0	0	542.1	77.8	5.90	57.5	14.3	1.92
14WF B14a 14X8	6	53.0	15.59	13.940	8.062	.370	.658	.658	.60	0	0	542.1	77.8	5.90	57.5	14.3	1.92
CB142N 14X8	9	53.0	15.56	13.940	8.060	.370	.658	.658	.65	0	0	541.1	77.6	5.90	57.5	14.3	1.92
CB143 14X8	7	48.0	14.12	14.000	8.000	.343	.595	.595	.55	0	0	496.0	70.9	5.93	50.8	12.7	1.90
14WF CB142 14X8	11	48.0	14.11	13.810	8.031	.339	.593	.593	.60	0	0	484.9	70.2	5.86	51.3	12.8	1.91
14WF B14a 14X8	6	48.0	14.11	13.810	8.031	.339	.593	.593	.60	0	0	484.9	70.2	5.86	51.3	12.8	1.91
CB142N 14X8	9	48.0	14.10	13.810	8.030	.340	.593	.593	.65	0	0	484.0	70.1	5.86	51.2	12.8	1.91
14WF CB142 14X8	11	43.0	12.65	13.680	8.000	.308	.528	.528	.60	0	0	429.0	62.7	5.82	45.1	11.3	1.89
14WF B14a 14X8	6	43.0	12.65	13.680	8.000	.308	.528	.528	.60	0	0	429.0	62.7	5.82	45.1	11.3	1.89
CB142N 14X8	9	43.0	12.64	13.680	8.000	.310	.528	.528	.65	0	0	428.3	62.6	5.82	45.1	11.3	1.89

AISC Historical Shapes 3rd Edition 1957

14" BEAMS

REFERENCES, SEE COLUMN (1) AND PAGE 4

1	3	5, 10	12
B1927	S24-1927	See Page 69	K1950
2	S27-1928	6,7,9,11	K1952
S24-1927	S35-1930	See Page 67	
S27-1928	S40-1931		
S35-1930	4		
	S40-1931		

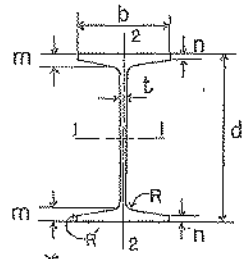

*Computed

SECT. NO. OR NOM. SIZE	COL. (1)	WEIGHT PER FOOT	AREA	DEPTH d	FLANGE WIDTH b	WEB THICK t	DIMENSIONS m	DIMENSIONS n	DIMENSIONS R	DIMENSIONS R'	SLOPE INSIDE FLANGE	AXIS 1—1 I	AXIS 1—1 S	AXIS 1—1 r	AXIS 2—2 I	AXIS 2—2 S	AXIS 2—2 r
		Lb.	Sq.In.	In.	In.	In.	In.	In.	In.	In.	%	In.⁴	In.³	In.	In.⁴	In.³	In.
B14	2	42.0	12.46	14.250	6.825	.340	.713	.443	.40	0	8 1/3*	436.5	61.3	5.92	27.3	8.0	1.48
B14	1	42.0	12.40	14.120	6.790	.340	.715	.445	.40	0	8 1/3*	426.8	60.5	5.87	27.0	7.94	1.48
B14 14X6¾	4	42.0	12.38	14.250	6.820	.335	.713	.443	.40	0	8 1/3*	435.3	61.1	5.93	27.2	7.98	1.48
CB141N 14X6¾	9	42.0	12.35	14.250	6.818	.333	.578	.578	.40	0	0	435.3	61.1	5.94	30.6	9.0	1.57
CB142 14X6¾	7	42.0	12.35	14.240	6.822	.342	.569	.569	.40	0	0	431.5	60.6	5.91	30.2	8.8	1.56
14WF CB141 14X6¾	10	42.0	12.34	14.240	6.801	.338	.573	.573	.43	0	0	432.2	60.7	5.92	28.1	8.3	1.51
14WF B14 14X6¾	5	42.0	12.34	14.240	6.801	.338	.573†		.40	0	5.0	432.2	60.7	5.92	28.1	8.3	1.51
CB142 14X6¾	7	39.0	11.47	14.160	6.798	.318	.529	.529	.40	0	0	398.3	56.3	5.89	27.7	8.2	1.56
14WF 14X6¾	12	38.1	11.18	13.875	6.852	.389	.440†		–	–	10.5	346.7	49.9	5.57	19.2	5.6	1.31
CB142 14X6¾	7	38.0	11.18	14.000	6.855	.375	.449	.449	.40	0	0	357.5	51.1	5.66	24.2	7.1	1.47
14WF CB141 14X6¾	11	38.0	11.17	14.120	6.776	.313	.513	.513	.43	0	0	385.3	54.6	5.87	24.6	7.3	1.49
14WF B14 14X6¾	6	38.0	11.17	14.120	6.776	.313	.513†		.40	0	5.0	385.3	54.6	5.87	24.6	7.3	
B14	2	37.5	11.07	14.120	6.790	.305	.648	.378	.40	0	8 1/3*	383.7	54.3	5.89	23.4	6.91	
B14	1	37.5	11.02	14.000	6.750	.300	.655	.385	.40	0	8 1/3*	377.4	53.9	5.85	23.4	6.93	1.46
B14 14X6¾	4	37.0	10.93	14.120	6.780	.295	.648	.378	.40	0	8 1/3*	381.3	54.0	5.91	23.3	6.88	1.46
CB141N 14X6¾	9	37.0	10.87	14.120	6.776	.291	.513	.513	.40	0	0	380.9	53.9	5.92	26.6	7.9	1.57
CB142 14X6¾	7	36.0	10.58	14.080	6.774	.294	.489	.489	.40	0	0	365.6	51.9	5.88	25.4	7.5	1.55
14WF CB141 14X6¾	11	34.0	10.00	14.000	6.750	.287	.453	.453	.43	0	0	339.2	48.5	5.83	21.3	6.3	1.46
14WF B14 14X6¾	6	34.0	10.00	14.000	6.750	.287	.453†		.40	0	5.0	339.2	48.5	5.83	21.3	6.3	1.46
B14	1	33.0	9.73	13.880	6.715	.265	.595	.325	.40	0	8 1/3*	330.3	47.6	5.83	20.0	5.95	1.43
CB142 14X6¾	7	33.0	9.71	14.000	6.750	.270	.449	.449	.40	0	0	333.4	47.6	5.86	23.0	6.8	1.54
B14 14X6¾	3	33.0	9.70	14.000	6.750	.265	.588	.318	.40	0	8 1/3*	334.3	47.8	5.87	19.9	5.9	1.43
CB141N 14X6¾	9	33.0	9.69	14.000	6.750	.265	.453	.453	.40	0	0	334.7	47.8	5.88	23.2	6.9	1.55
14WF 14X6¾	12	32.4	9.53	13.875	6.733	.270	.440†		–	–	10.5	320.2	46.1	5.79	18.1	5.4	1.38
B14 14X6¾	3	30.0	8.89	13.880	6.750	.265	.528	.258	.40	0	8 1/3*	294.9	42.5	5.76	16.8	4.99	1.38
CB141 14X6	7	30.0	8.82	13.964	6.000	.270	.431	.431	.40	0	0	292.0	41.8	5.75	15.5	5.2	1.33
CB141N 14X6¾	9	30.0	8.81	13.860	6.733	.270	.383	.383	.40	0	0	289.3	41.4	5.73	17.1	5.0	1.41
14WF CB141 14X6¾	11	30.0	8.81	13.860	6.733	.270	.383	.383	.43	0	0	289.6	41.8	5.73	17.5	5.2	1.41
14WF B14 14X6¾	6	30.0	8.81	13.860	6.733	.270	.383†		.40	0	5.0	289.6	41.8	5.73	17.5	5.2	1.41

†Average thickness

AISC Historical Shapes 3rd Edition 1957

4-2-2
Materials References

STANDARDS AND SPECIFICATIONS FOR METALS AND METAL PRODUCTS

1933

3. *Chemical composition.*—The steel shall conform to the following requirements as to chemical composition:

Elements considered	Class A steel	Class B steel	Class C steel
Phosphorus, maximum:	*Per cent*	*Per cent*	*Per cent*
Basic open-hearth	0.04	0.06	0.04
Acid open-hearth	.06	.08	.04
Bessemer		.11	
Sulphur, maximum	.06		.05

4. *Ladle analysis.*—An analysis of each melt of steel shall be made by the menufacturer to determine the percentages of the elements specified in section 3. This analysis shall be made from a test ingot taken during the pouring of the melt. The chemical composition thus determined shall conform to the requirements specified in section 3, and shall be reported to the purchaser or his representative, if requested.

5. *Tension tests.*—The steel shall conform to the following requirements as to tensile properties:

Properties considered	Class A steel	Class B steel	Class C steel
Tensile strength ..... lbs./in.²	55,000-65,000	[2] 55,000-65,000	46,000-56,000
Yield point (minimum) ..... do	0.5 tensile strength.	[2] .5 tensile strength.	0.5 tensile strength
Elongation in 8 inches (minimum) ..... per cent	[2] $\frac{1,400,000}{\text{Tensile strength}}$	[2] $\frac{1,400,000}{\text{Tensile strength}}$	$\frac{1,400,000}{\text{Tensile strength}}$
Elongation in 2 inches (minimum) ..... do	22	22	.....

[1] See sec. 6.

[2] See sections on modifications in elongation.

6. *Modification in tensile strength.*—Class B steel may have tensile strength np to 70,000 pounds maximum, provided the elongation is not less than the percentage required for 65,000 pounds tensile strength.

7. *Bend tests.*—The 1 by ½ inch test specimen for pins, rollers, and other bars, shall bend cold through 180° around a pin 1 inch in diameter without cracking on the outside of the bent portion.

8. *Test specimens.*—(*a*) Tension-test specimens for plates and eyebar flats over 1½ inches in thickness, and bend-test specimens for plates over 1½ inches in thickness may be machined to a thickness or diameter of at least three-fourths inch for a length of at least 9 inches.

(*b*) Test specimens for bars over 1½ inches in thickness may be machined to a thickness or diameter of at least three-fourths inch for a length of at least 9 inches; or tension-test specimens may conform to the dimensions shown in Figure 129. Bend-test specimens may be 1 by ½ inch in section.

(*c*) The tension-test specimen shown in Figure 129 and the 1 by ½ inch bend-test specimen for pins and rollers shall be taken so that the axis is 1 inch from the surface; and for other bars over 1½ inches in thickness, midway between the center and surface.

9. *Number of tests.*—Plates three-sixteenths inch and under in thickness; shapes less than 1 square inch sectional area; rounds (except rivet rods) under one-half inch in diameter; and squares, hexagons, and flats less than one-half square inch sectional area, shall not be subject to tension tests.

10. *Permissible variations.*—(*a*) The sectional area or weight of each structural shape, and of each rolled edge plate up to and including 36 inches in width, shall not vary more than 2.5 per cent from the theoretical or specified amounts.

(*b*) The thickness or weight of sheared mill plates, and of universal mill plates over 36 inches in width, shall conform to the manufacturers' standard practice governing the permissible variations for sheared mill plates. (See A. A. S. M., 605.0, p. 248, Tables 1 and 2.)

(*c*) The weights of angles, tees, zees, and channels of bar sizes, and the dimensions of rounds, squares, hexagons, and flats, shall conform to the manufacturers' standard practice governing the allowable variations in size and weight of hot-rolled bars. (See A. A. S. M., 605.0, p. 248, Tables 3, 4, and 5.)

(For requirements relating to check analyses, yield point, modification in tensile strength, modifications in elongation, bend tests, test specimens, number of tests, finish, marking, inspection, rejection, and test specimen figures, see A. S. T. M. A7 (above), paragraphs 5 (*b*), 6, 7, and 8 (*a*), (*b*), (*c*), (*d*), (*e*), (*h*), and (*j*), and A. S. T. M. specifications (605.0, p. 247,) paragraphs 1, 2, 3, 5, 6, 7, and 8, and Figures 128 and 129.)

UNITED STATES GOVERNMENT, FEDERAL SPECIFICATIONS BOARD, FEDERAL SPECIFICATION FOR STRUCTURAL STEEL FOR BRIDGES, NO. 351a, MARCH 25, 1929. (CURRENT DESIGNATION: QQ-S-711)

(This specification is, for certain requirements, substantially the same as specification A7 of the American Society for Testing Materials. For requirements relating to process, manufacturers' analyses, tension tests, modifications in elongation, bend tests, test specimens, and copper steel, see A. S. T. M. A7 (above), paragraphs 2, 4, 5, 6, 7, and 8 (*a*), (*b*), (*c*), (*d*), (*e*), (*f*), (*g*), (*h*), and (*j*), and that pert of paragraph 3 which relates to copper steel. For requirements relating to yield point, permissible variations in sheared pintes and structural shapes except of bar sizes, finish, and marking, see A. S. T. M. specifications (605.0, p. 247), paragraphs 2, 4, and 5, and the first two sentences in paragraph 6.)

(For tables of permissible variations in plates ordered to weight and thickness, and in angles, tees, zees, channels, rounds, squares, hexagons, and flats, see A. A. S. M. (605.0, p. 248), Tables 1, 2, 3, 4, and 5.)

(The following additional material is given:)

GENERAL SPECIFICATIONS

1. Federal specification No. 339a (QQ-M-151) for metals, in effect on date of invitation for bids, shall form part of this specification. (See 600.0, p. 3.)

CLASSES

2. Structural steel for bridges shall be of tha following classes: (*a*) structural steel, noncopper; (*b*) structural steel, copper; (*c*) rivet steel, noncopper; and (*d*) rivet steel, copper.

GENERAL REQUIREMENTS

3. *Structural shapes of bar sizes.*—The weight of each piece shall not vary from the weight specified more than the amount given in Table 3.

4. *Rolled edge plates.*—Each plate up to and including 36 inches in width, shall not vary more than 2.5 per cent from the cross section (or sectional area) or weight specified; rolled edge plates more than 36 inches in width shall conform to limits specified for sheared plates.

Digitized by Google

5. *Rounds (including rivet bars), squares, and hexagons.*—No piece shall vary from the limits given in Table 4.

6. *Flats.*—No piece shall vary from the limits given in Table 5.

DETAIL REQUIREMENTS

7. *Chemical composition.*—The amounts of phosphorus and sulphur shall not exceed the following percentages:

	Structural steel, classes A and B	Rivet steel, classes C and D
	Per cent	*Per cent*
Phosphorus:		
Acid	0.070	0.050
Basic	.050	.050
Sulphur	.075	.070

METHODS OF TEST

8. *Number of tests.*—Two tension and two bend tests shall be made from each melt, unless the finished material from a melt is less than 26 short tons, when one tension and one bend shall be sufficient. If, however, material from one melt differs three-eighths inch or more in thickness, the thickest and thinnest material rolled shall each be represented by one tension and one bend test, regardless of the weight of the melt. Plates and flats three-sixteenths inch and less in thickness and shapes less than 1 square inch in section, shall not be subject to tension tests.

9. *Test specimens.*—For bars over 1½ inches in thickness or diameter, other than flats, when out tested in the full section as rolled, the tension test specimens shall be taken so that the axis shall be at a point one-half the distance between the center and the surface of the bar.

NOTES

10. Material covered by this specification is suitable for the following classes of work, among others: Reamed work, oil-tight and water-tight work, railroad and highway bridges, cranes of 40-ton capacity and over, radio towers 300 feet high or more, and any other structures in which there is a considerable and rapid variation of stress intensity.

11. When specifying materials in accordance with this specification, the class or classes (A, B, C, and D) should be stated definitely.

605.12 STRUCTURAL STEEL FOR BUILDINGS

AMERICAN INSTITUTE OF STEEL CONSTRUCTION, STANDARD SPECIFICATION FOR STRUCTURAL STEEL FOR BUILDINGS, 1923

MATERIAL

(The institute indorses specification A9, of the American Society for Testing Materials, for structural steel for buildings. (See below.)

AMERICAN RAILWAY ENGINEERING ASSOCIATION, SPECIFICATIONS FOR BUILDINGS FOR RAILWAY PURPOSES, 1929

STRUCTURAL STEEL

(The association indorses American Society for Testing Materials specification A9, for structural steel for buildings (below), with the following exceptions:)

1. Structural steel shall be made by the open-hearth process.

3. The reference to Bessemer steel in paragraph 2 of A. S. T. M. A9 shall be omitted.

CAST STEEL

(The association indorses American Society for Testing Materials specification A7, for structural steel for bridges. (See 605.11, p. 249.)

AMERICAN SOCIETY FOR TESTING MATERIALS, STANDARD SPECIFICATIONS FOR STRUCTURAL STEEL FOR BUILDINGS, DESIGNATION A9–29, 1929

1. *Process.*—(*a*) Structural steel, except as noted in paragraph (*b*), shall be made by either or both the following processes: Bessemer or open hearth.

(*b*) Rivet steel, and steel for plates or angles over three-fourths inch in thickness which are to be punched, shall be made by the open-hearth process.

2. *Chemical composition.*—The steel shall conform to the following requirements as to chemical composition:

	Structural steel	Rivet steel
	Per cent	*Per cent*
Phosphorus, maximum:		
Bessemer	0.10	------
Open hearth	.05	0.04
Sulphur, maximum	------	.045
Copper, when copper steel is specified, minimum	.20	.20

3. *Ladle analyses.*—(*a*) A carbon determination, and a copper determination when copper steel is specified, shall be made of each melt of Bessemer steel, and determinations for manganese, phosphorus, and sulphur representing the average of the melts applied for each 12-hour period.

(*b*) An analysis of each melt of open-hearth steel shall be made to determine carbon, manganese, phosphorus, and sulphur; also copper when copper steel is specified.

(*c*) These analyses shall be made by the manufacturer from test ingots taken during the pouring of each melt. The chemical composition thus determined shall be reported to the purchaser or his representative and the percentages of phosphorus and sulphur, and also copper when copper steel is specified, shall conform to the requirements specified in section 2.

4. *Tension tests.*—The material shall conform to the following requirements as to tensile properties:

Properties considered	Structural steel	Rivet steel
Tensile strength ..... lbs./in.²	55,000–65,000	45,000–55,000
Yield point, minimum ..... do	0.5 tensile strength.	0.5 tensile strength.
but in no case less than	30,000	25,000
Elongation in 8 inches, minimum ..... per cent	[1] 1,400,000 / Tensile strength	[1] 1,400,000 / Tensile strength
Elongation in 2 inches, minimum ..... per cent	22	------

[1] See section on modifications in elongation.

Digitized by Google

ATTACHMENT 5
Boom to Tower Interface Loads

ATTACHMENT

Table of Contents

Attachment 5 – Boom to Tower Interface Loads
- 5-1 – Discussion and Summary
- 5-2 – Calculated Boom Loads
- 5-3 – Roller Forces
  - 5-3-1 – Calculated
  - 5-3-2 – Original Design Calculations

5-1
Discussion and Summary

BACKGROUND

STV Inc. retained Liftech Consultants Inc. (Liftech) to provide engineering services for the study of the "Hammerhead" crane at the Norfolk Naval Shipyard facility in Portsmouth, VA. Liftech's work is limited to the structural, mechanical, and electrical systems on the boom, the portion of the crane above the slew ring. Refer to Figure 1.

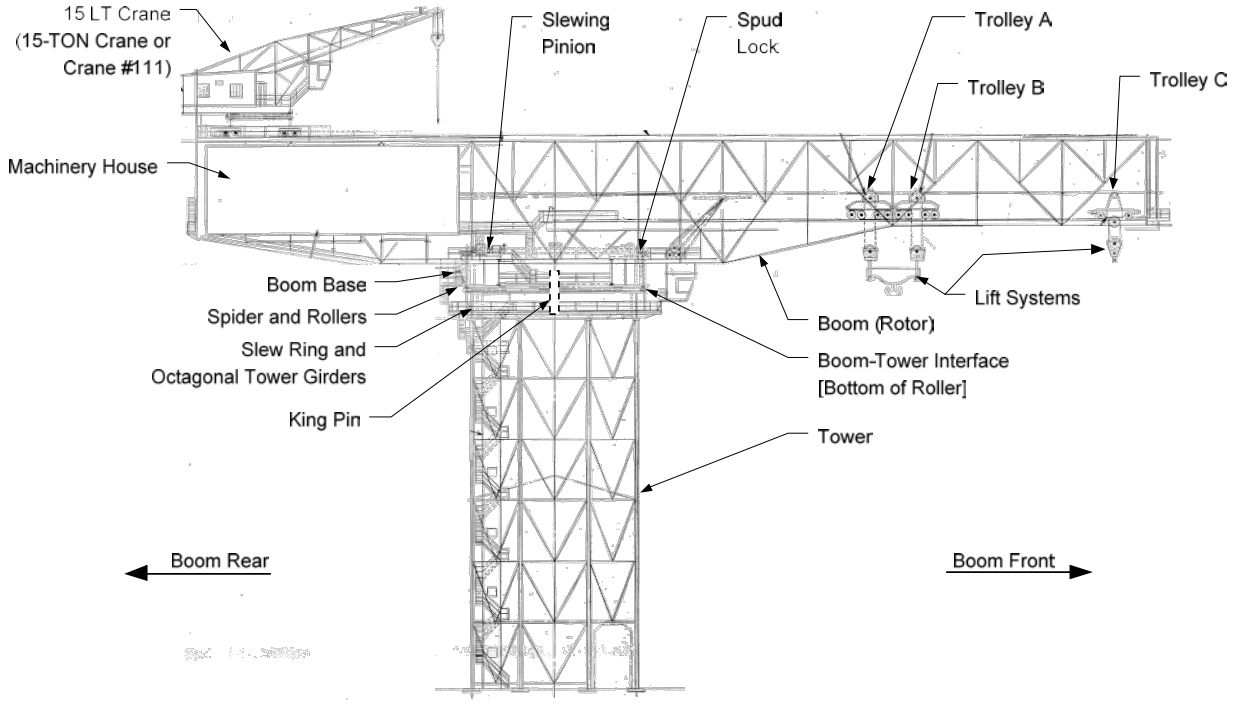

Figure 1: Hammerhead Crane Terminology and Axes

As part of Liftech's work, Liftech is providing calculated boom loads on the tower at the boom-tower interface for the reviewed "mothballed" criteria. Refer to Attachment 5-2. STV will use the boom loads to evaluate the tower structure and provide tower loads to Moffatt & Nichol, who is reviewing the foundation structure.

PURPOSE

This report presents the calculated boom-tower interface loads.

APPROACH

Liftech used the Liftech Analysis Suite (LAS) to analyze a finite element model of the boom structure. Refer to Figure 2 for an overview of the LAS model and Figure 3 for the model near the supports. The model uses beam elements. This model will also be used to evaluate the strength of the existing structure.

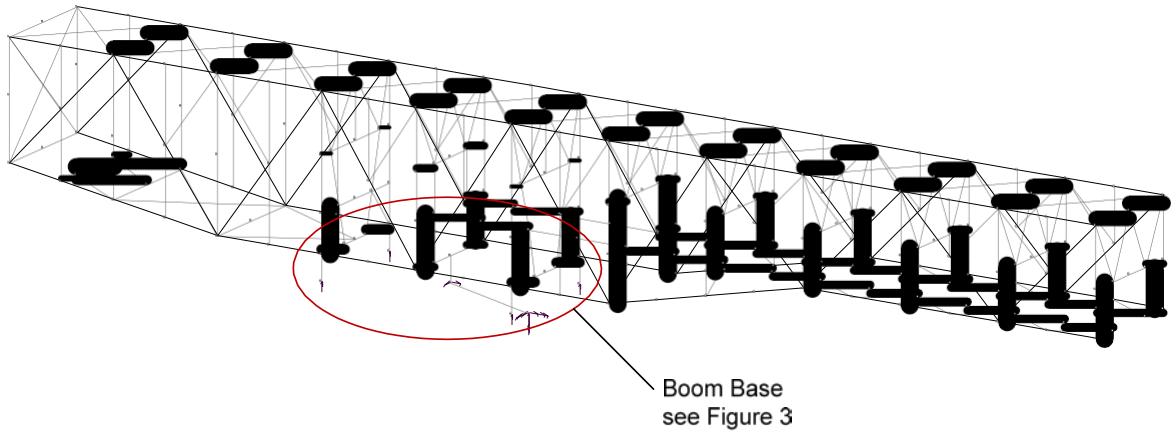

Figure 2: LAS Boom Model

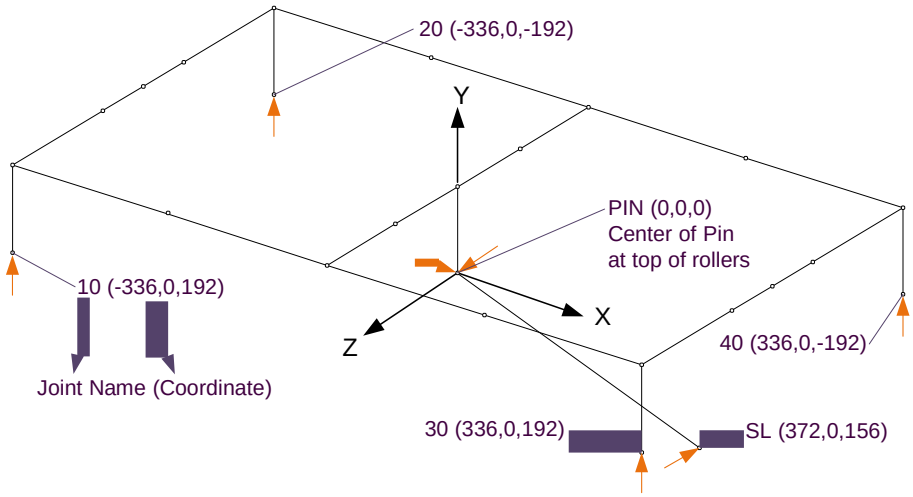

Figure 3: LAS Boom Model - Boom Base – units in inches

The loads applied to the boom structure are based on the current version of the Review Criteria. Refer to Attachment 3.

BOOM-TOWER INTERFACE SUPPORTS AND LOADS

Boom FEM Supports

The boom structure is supported vertically at four points (10, 20, 30, & 40) and laterally at two points, the King Pin and the Spud Lock (PIN & SL). Refer to Figure 3.

The modeled supports are appropriate for a global analysis of the boom and tower structures. Forces at individual rollers are required for a local analysis of the structures at the interface.

Boom Loads and Reactions at FEM Supports

Basic Loads include dead loads (DLX, DLY, & DLZ), wind loads (WLX & WLZ), and earthquake loads (EQX, EQY, & EQZ).

Calculated resultants and support reactions for the Basic Loads are presented on Page B1. Table 1 is a summary of the calculated boom loads and support reactions.

Load Name	Description	Resultant				Reaction Force, kips					
		Total Load, kips	Location [3], ft								
			X	Y	Z	10	20	30	40	PIN	SL
Basic Loads											
DLX	Total Dead Load, X direction	3,565	0.0	32.6	0.0	1,043	1,033	-1,043	-1,033	3,570	13
DLY	Total Dead Load, Y direction	3,565	-12.7	0.0	0.0	-1,281	-1,309	-489	-487	0.0	0.0
DLZ	Total Dead Load, Z direction	3,565	-12.7	32.6	0.0	-1,851	1,851	-1,782	1,782	4,117	1,345
WLX	Total Wind Load, X direction	150	0.0	42.0	0.0	57	56	-57	-56	150	0.0
WLZ	Total Wind Load, Z direction	285	43.2	40.4	0.0	-278	278	-83	83	151	367
EQX	Total Earthquake Load, X direction	125	0.0	32.6	0.0	36	36	-36	-36	-	-
EQY	Total Earthquake Load, Y direction	143	-12.7	0.0	0.0	-51	-52	-20	-19	0.0	0.0
EQZ	Total Earthquake Load, Z direction	125	-12.7	32.6	0.0	-65	65	-62	62	-	-

Maximum Combined ASD Reactions	-1,565	-1,592	-589	-587	203	358
Governing ASD Load Combination	5W	5W	5W	5W	5W	5W

Load Name	Description	Resultant	Reaction Force, kips

Notes:

1. All basic loads shown above include the loads from the three trolleys and the 15 LT crane.
2. Resultant coordinates are relative to the coordinate system shown in Figure 3.
3. Reaction forces for Joints 10–40 are vertical, and Joints PIN and SL are lateral.
4. Maximum Combined ASD Reactions are the maximum reactions at each support, and are non-concurrent.

Roller Forces

Roller forces have been calculated based on the calculated FEA support reactions and an elastic distribution that assumes limited beam deformation. Refer to Figure 4 for the roller arrangement.

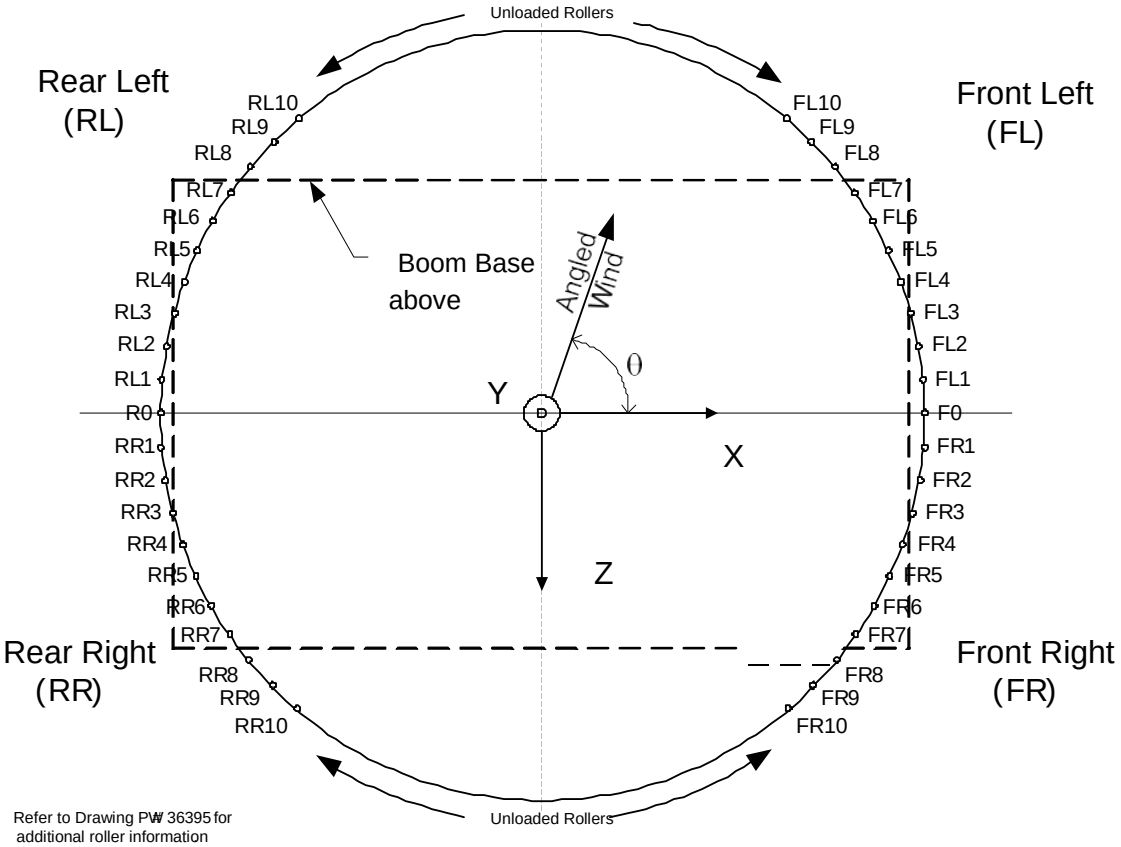

Figure 4: Roller Arrangement

Vertical roller forces are calculated for two loading conditions: maximum at Front-Left rollers and maximum Rear-Left rollers. Table 2 presents a complete, concurrent set of calculated roller forces for each of these two loading conditions. Refer to Attachment 5-3 for additional roller force data, including roller forces for Basic Loads.

Table2: Calculated Combined ASD Roller Forces - Summary

Roller #	**Loading Condition**							
	Maximum at Rear-Left Rollers				**Maximum at Front-Left Rollers**			
	FL	FR	RL	RR	FL	FR	RL	RR
0	37.2		138.4		44.4		129.8	
1	39.9	36.1	139.6	125.7	44.8	38.7	135.0	123.6
2	41.8	34.3	144.5	119.7	45.7	36.9	140.7	117.8
3	43.7	32.5	150.0	113.7	46.9	35.2	146.3	112.2
4	45.6	30.7	155.5	107.9	48.3	33.4	151.8	106.6
5	47.4	29.0	161.0	102.2	49.7	31.8	157.2	101.2
6	49.2	27.3	166.4	96.7	51.3	30.2	162.4	95.9
7	50.9	25.7	171.6	91.4	52.8	28.6	167.4	90.9
8	52.5	24.1	176.6	86.4	54.2	27.1	172.1	86.1
9	54.0	22.7	181.3	81.6	55.6	25.7	176.6	81.6
10	55.4	21.3	185.7	77.2	56.9	24.4	180.9	77.4

Notes:

1. Roller forces shown above are based on the ASD Load Combination 5W (1.0* DLY + 1.0* Angled WL).

SUMMARY

Calculated boom loads on the tower are provided in this report.

5-2
Calculated Boom Loads

HAMMERHEAD BOOM REACTIONS

Source: J:\LC\S1968\S1968\Calcs\LAS\Boom0 Running Date 11/28/12 3:43:04 PM

Unit: kips,inches

Basic Load	Mag	Xcg	Ycg	Zcg
DLX	3565		391	-1
DLY	3565	-152		-1
DLZ	3560	-152	391	
WLX	150		504	
WLZ	285	518	485	

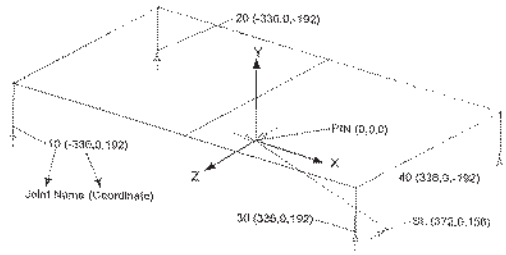

Support Reactions

Joints	10	20	30	40	PIN			SL		
Basic Loads	Y	Y	Y	Y	X	Z	R	X	Z	R
DLX	1042.5	1033.1	-1042.5	-1033.1	3670.2	-11.7		-4.9	11.7	
DLY	-1280.8	-1308.8	-488.5	-487.2	0.0	0.0		0.0	0.0	
DLZ	-1850.7	1850.7	-1781.6	1781.6	-519.9	4804.9		519.9	-1239.7	
WLX	56.6	55.9	-56.6	-55.9	150.0	0.0		0.0	0.0	
WLZ	-278.0	278.0	-82.8	82.8	142.0	-52.8		-142.0	338.6	
Other Loads										
Angled W	283.7	283.6	100.3	99.9	200.0	32.8	202.7	140.0	330.0	358.5
EQX	36.5	36.2	-36.5	-36.2						
EQY	-51.2	-52.4	-19.5	-19.5						
EQZ	-64.6	64.8	-62.4	62.4						
Angled EQ	74.3	74.2	72.2	72.1	39.7	167.0	171.7	18.3	43.1	46.8

Angled wind and angled EQ loads are for the most severe angle at each corner.
R at PIN and SL is the resultant of X and Z components.

Load Combination Factors ASD ASCE 7 Combinations

	5W asd	5E asd	7W asd	8E asd
DLY	1.0	1.0	0.6	0.6
Angled W	1.0		1.0	
Angled EQ		0.7		0.7
EQY		0.7		0.7

Factored Loads ASD

	10	20	30	40	PIN			SL		
	Y	Y	Y	Y	X	Z	R	X	Z	R
5W asd	-1564.5	-1592.4	-588.8	-587.1	200.0	32.8	202.7	140.0	330.0	358.5
5E asd	-1368.7	-1397.4	-552.8	-551.3	27.8	116.9	120.2	12.8	30.2	32.8
7W asd	-1052.2	-1068.8	-393.4	-392.2	200.0	32.8	202.7	140.0	330.0	358.5
8E asd	-856.4	-873.9	-357.4	-356.4	27.8	116.9	120.2	12.8	30.2	32.8
Max Comp.	**-1564.5**	**-1592.4**	**-588.8**	**-587.1**	**Max R**		**202.67**			**358.47**

Negative = Compression

Factored combined loads are maximum, and non-concurrent.
R at PIN and SL is the resultant of X and Z components.

Load Combination Uplift Review ASCE 7 Combinations

	7W lrfd	8E lrfd	
DLY	0.9	0.9	
Angled W	1.6		
Angled EQ		3.0	
EQY		3.0	For stress R = 3.0, for uplift R=1.0 and factor for E is 1.0

Factored Loads Uplift Review

7W lrfd	-698.8	-724.2	-279.2	-278.6	
8E lrfd	-776.0	-798.3	-164.3	-163.8	
Minimum	**-698.8**	**-724.2**	**-164.3**	**-163.8**	Min Compression - Uplift Review - Positive indicates uplift

(2)

<u>Wind Load</u> $W_{LX} = 150^{K}$ & $W_{LZ} \cong$ 2 x max. , $W = W_{LZ}$.

$W_{LZ} = 285^{K}$.

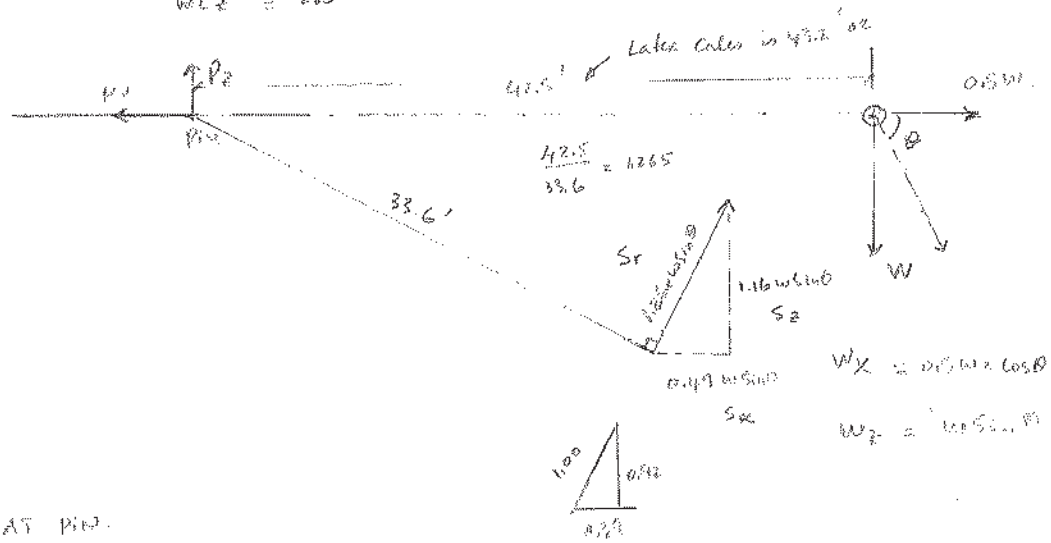

AT PIN.

$P_X = 0.5W\cos\theta + 0.49W\sin\theta$ $\qquad$ $S = 1.26 \times W\sin\theta$.

$P_Z = 1.16W\sin\theta - W\sin\theta = 0.16W\sin\theta$.

$P_r = \sqrt{P_X^2 + P_Z^2}$ max @ $\theta = 46°$ See grid next sht.

$P_X = W(0.5\cos 46° + 0.49\sin 46) = 285 \times 0.7 = 200^{K}$.

$P_Z = 285 \times 0.16 \times \sin 46° = 32.8^{K}$

$\underline{P_r = 203^{K}}$.

AT SPROCKET : S_r is max @ $\theta = 90°$

$S_r = 1.26 \times 285 = 359^{K}$

$S_X = 140^{K}$

$S_Z = 330^{K}$.

3

Hammerhead Crane **Wind Angle for Max Pin Loads**

X:\S1968\Calcs\Grids-Visio\[EQ and Wind Angle for Max Pin Loads.xlsx]Wind

Date: 11/27/2012

			Wind	Max at Pin	
Angle	Cos Angle	Sine Angle	Px	Pz	P srss
0	1.000	0.000	0.500	0.000	0.500000
5	0.996	0.087	0.541	0.014	0.540983
10	0.985	0.174	0.577	0.028	0.578159
15	0.966	0.259	0.610	0.041	0.611189
20	0.940	0.342	0.637	0.055	0.639781
25	0.906	0.423	0.660	0.068	0.663690
30	0.866	0.500	0.678	0.080	0.682716
31	0.857	0.515	0.681	0.082	0.685920
32	0.848	0.530	0.684	0.085	0.688922
33	0.839	0.545	0.686	0.087	0.691719
34	0.829	0.559	0.689	0.089	0.694312
35	0.819	0.574	0.691	0.092	0.696699
36	0.809	0.588	0.693	0.094	0.698880
37	0.799	0.602	0.694	0.096	0.700853
38	0.788	0.616	0.696	0.099	0.702619
39	0.777	0.629	0.697	0.101	0.704176
40	0.766	0.643	0.698	0.103	0.705524
41	0.755	0.656	0.699	0.105	0.706663
42	0.743	0.669	0.699	0.107	0.707593
43	0.731	0.682	0.700	0.109	0.708312
44	0.719	0.695	0.700	0.111	0.708821
45	0.707	0.707	0.700	0.113	0.709119
46	**0.695**	**0.719**	**0.700**	**0.115**	**0.709207**
47	0.682	0.731	0.699	0.117	0.709084
48	0.669	0.743	0.699	0.119	0.708751
49	0.656	0.755	0.698	0.121	0.708208
50	0.643	0.766	0.697	0.123	0.707454
51	0.629	0.777	0.695	0.124	0.706490

EQ: $0.035 \times 3565 = 125^K$

EQ loads on pin & spudlock

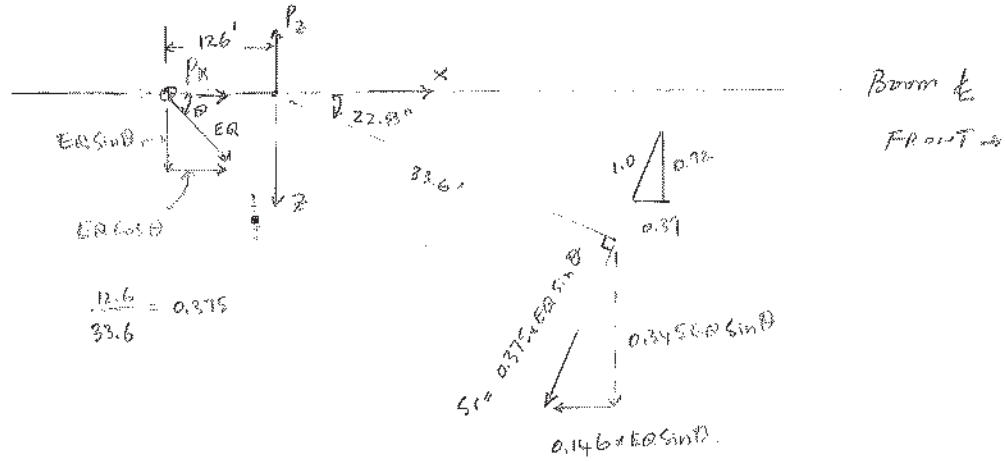

$\frac{12.6}{33.6} = 0.375$

AT PIN: $P_x = EQ\cos\theta - 0.146\,EQ\sin\theta$

$= EQ(\cos\theta - 0.146\sin\theta)$

$P_z = EQ(\sin\theta + 0.345\sin\theta) = 1.345\,EQ\sin\theta$

$P_r = \sqrt{P_x^2 + P_z^2}$. P_r max at $\theta = 100°$. See grid. and sht.

$= 1.362\,EQ = 170^K$; $P_x = -39.7$ $P_z = 167^K$.

AT SPUD LOCK:

S_r max at $\theta = 90°$ $= 0.375\,EQ = 46.9^K$

$S_x = 18.3^K$ $S_z = 43.1^K$

Hammerhead Crane **EQ Angle for Max Pin Loads**

X:\S1968\Calcs\Grids-Visio\[EQ and Wind Angle for Max Pin Loads.xlsx]EQ

Date: 11/27/2012

			EQ Max at Pin		
Angle	Cos Angle	Sine Angle	Px	Pz	P srss
0	1.000	0.000	1.0000	0.0000	1.000000
5	0.996	0.087	0.9835	0.1172	0.990432
10	0.985	0.174	0.9595	0.2336	0.987473
20	0.940	0.342	0.8898	0.4600	1.001641
30	0.866	0.500	0.7930	0.6725	1.039781
40	0.766	0.643	0.6722	0.8645	1.095123
50	0.643	0.766	0.5309	1.0303	1.159087
60	0.500	0.866	0.3736	1.1648	1.223240
70	0.342	0.940	0.2048	1.2639	1.280376
80	0.174	0.985	0.0299	1.3246	1.324903
81	0.156	0.988	0.0122	1.3284	1.328497
82	0.139	0.990	-0.0054	1.3319	1.331922
83	0.122	0.993	-0.0230	1.3350	1.335173
84	0.105	0.995	-0.0407	1.3376	1.338250
85	0.087	0.996	-0.0583	1.3399	1.341149
86	0.070	0.998	-0.0759	1.3417	1.343868
87	0.052	0.999	-0.0935	1.3432	1.346405
88	0.035	0.999	-0.1110	1.3442	1.348757
89	0.017	1.000	-0.1285	1.3448	1.350923
90	0.000	1.000	-0.1460	1.3450	1.352901
91	-0.017	1.000	-0.1634	1.3448	1.354689
92	-0.035	0.999	-0.1808	1.3442	1.356287
93	-0.052	0.999	-0.1981	1.3432	1.357692
94	-0.070	0.998	-0.2154	1.3417	1.358904
95	-0.087	0.996	-0.2326	1.3399	1.359921
96	-0.105	0.995	-0.2497	1.3376	1.360744
97	-0.122	0.993	-0.2668	1.3350	1.361370
98	-0.139	0.990	-0.2838	1.3319	1.361801
99	-0.156	0.988	-0.3006	1.3284	1.362034
100	**-0.174**	**0.985**	**-0.3174**	**1.3246**	**1.362071**
101	-0.191	0.982	-0.3341	1.3203	1.361911
102	-0.208	0.978	-0.3507	1.3156	1.361555
103	-0.225	0.974	-0.3672	1.3105	1.361002

5-3
Roller Forces

5-3-1
Calculated

HAMMERHEAD BOOM ROLLER LOADS

Date: 11/28/2012

X:\S1968\Calcs\Grids-Visio\[Roller Loads 03 kdp.xlsx]Sheet1

By: kdp Unit: kips, ft

Number of Rollers	42
Section Modulus	
Szz_0	961
Sxx_10	334

Roller No.	x	z
0	20.153	0.000
1	21.671	2.236
2	23.057	4.458
3	24.300	6.653
4	25.394	8.807
5	26.331	10.906
6	27.105	12.939
7	27.713	14.891
8	28.149	16.752
9	28.412	18.509
10	28.500	20.153

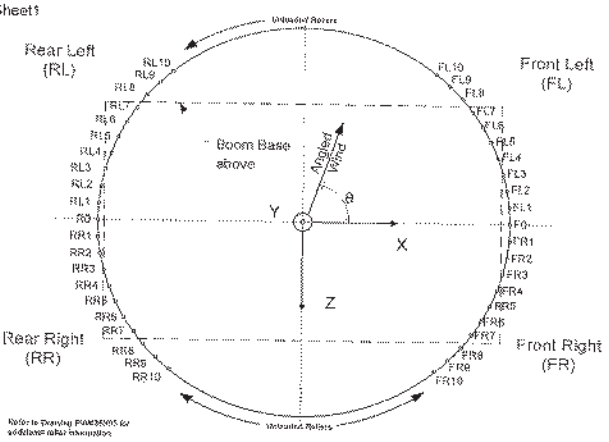

	P	Mx	Mz	
DLY	3565	-415.9	-45157	Total
WLX			6300	Total
WLZ		8896		Line 10-20

Max Roller RL10
Wind angle = 95.7 degree

Rear Left Quardrant ; Load Case 5W asd

Roller No.	DLY	WLX	WLZ	Sum
RL0	131.87	-6.56	0.00	138.4
RL1	131.30	-5.85	-5.91	139.6
RL2	131.39	-5.80	-11.78	144.5
RL3	131.47	-5.75	-17.59	150.0
RL4	131.56	-5.70	-23.28	155.5
RL5	131.65	-5.66	-28.83	161.0
RL6	131.75	-5.63	-34.20	166.4
RL7	131.84	-5.60	-39.36	171.6
RL8	131.93	-5.58	-44.28	176.6
RL9	132.03	-5.57	-48.92	181.3
RL10	132.12	-5.56	-53.27	185.7

Sum = DLY + Angled Wind
Angled Wind = SRSS of WLX and WLZ

Front Left Quardrant ; Load Case 5W asd

	DLY	WLX	WLZ	Sum
FL0	37.89	6.56	0.00	37.2
FL1	38.74	5.85	-1.76	39.9
FL2	38.93	5.80	-3.51	41.8
FL3	39.11	5.75	-5.24	43.7
FL4	39.29	5.70	-6.93	45.6
FL5	39.46	5.66	-8.59	47.4
FL6	39.62	5.63	-10.19	49.2
FL7	39.76	5.60	-11.72	50.9
FL8	39.90	5.58	-13.19	52.5
FL9	40.02	5.57	-14.57	54.0
FL10	40.13	5.56	-15.87	55.4

Sum = DLY - 0.10*WLX - 0.995*WLZ

	P	Mx	Mz	
DLY	3565	-415.9	-45157	Total
WLX			6300	Total
WLZ		2650		Line 30-40

Rear Right Quadrant (RR) ; Load Case 5W asd

Roller No.	DLY	WLX	WLZ	Sum
RR1	131.02	-5.85	5.91	125.7
RR2	130.83	-5.80	11.78	119.7
RR3	130.65	-5.75	17.59	113.7
RR4	130.47	-5.70	23.28	107.9
RR5	130.31	-5.66	28.83	102.2
RR6	130.15	-5.63	34.20	96.7
RR7	130.00	-5.60	39.36	91.4
RR8	129.86	-5.58	44.28	86.4
RR9	129.74	-5.57	48.92	81.6
RR10	129.63	-5.56	53.27	77.2

Sum = DLY - 0.10*WLX - 0.995*WLZ

Front Right Quadrant (FR) ; Load Case 5W asd

Roller No.	DLY	WLX	WLZ	Sum
FR1	38.46	5.85	1.76	36.1
FR2	38.38	5.80	3.51	34.3
FR3	38.29	5.75	5.24	32.5
FR4	38.20	5.70	6.93	30.7
FR5	38.11	5.66	8.59	29.0
FR6	38.02	5.63	10.19	27.3
FR7	37.92	5.60	11.72	25.7
FR8	37.83	5.58	13.19	24.1
FR9	37.74	5.57	14.57	22.7
FR10	37.64	5.56	15.87	21.3

Sum = DLY - 0.10*WLX - 0.995*WLZ

7

HAMMERHEAD BOOM ROLLER LOADS

Date: 11/28/2012 By: kdp Unit: kips, ft

X:\S1968\Calcs\Grids-Visio\[Roller Loads 03 kdp.xlsx]Sheet1

Max Roller FL10

Wind angle = 71.5 degree

	P	Mx	Mz	
DLY	3565	-415.9	-45157	Total
WLX			6300	Total
WLZ		7104		Line 10-20

Rear Left Quadrant (RL) ; Load Case 5W asd

Roller No.	DLY	WLX	WLZ	Sum
RL0	131.87	-6.56	0.00	129.8
RL1	131.30	-5.85	-5.91	135.0
RL2	131.39	-5.80	-11.78	140.7
RL3	131.47	-5.75	-17.59	146.3
RL4	131.56	-5.70	-23.28	151.8
RL5	131.65	-5.66	-28.83	157.2
RL6	131.75	-5.63	-34.20	162.4
RL7	131.84	-5.60	-39.36	167.4
RL8	131.93	-5.58	-44.28	172.1
RL9	132.03	-5.57	-48.92	176.6
RL10	132.12	-5.56	-53.27	180.9

Sum = DLY + 0.318* WLX - 0.948*WLZ

Front Left Quadrant (FL) ; Load Case 5W asd

	DLY	WLX	WLZ	Sum
FL0	37.89	6.56	0.00	44.4
FL1	38.74	5.85	-1.76	44.8
FL2	38.93	5.80	-3.51	45.7
FL3	39.11	5.75	-5.24	46.9
FL4	39.29	5.70	-6.93	48.3
FL5	39.46	5.66	-8.59	49.7
FL6	39.62	5.63	-10.19	51.3
FL7	39.76	5.60	-11.72	52.8
FL8	39.90	5.58	-13.19	54.2
FL9	40.02	5.57	-14.57	55.6
FL10	40.13	5.56	-15.87	56.9

Sum = DLY + Angled Wind

Angled Wind = SRSS of WLX and WLZ

	P	Mx	Mz	
DLY	3565	-415.9	-45157	Total
WLX			6300	Total
WLZ		2115		Line 30-40

Rear Right Quadrant ; Load Case 5W asd

Roller No.	DLY	WLX	WLZ	Sum
RR1	131.02	-5.85	5.91	123.6
RR2	130.83	-5.80	11.78	117.8
RR3	130.65	-5.75	17.59	112.2
RR4	130.47	-5.70	23.28	106.6
RR5	130.31	-5.66	28.83	101.2
RR6	130.15	-5.63	34.20	95.9
RR7	130.00	-5.60	39.36	90.9
RR8	129.86	-5.58	44.28	86.1
RR9	129.74	-5.57	48.92	81.6
RR10	129.63	-5.56	53.27	77.4

Sum = DLY + 0.318*WLX - 0.948*WLZ

Front Right Quadrant ; Load Case 5W asd

Roller No.	DLY	WLX	WLZ	Sum
FR1	38.46	5.85	1.76	38.7
FR2	38.38	5.80	3.51	36.9
FR3	38.29	5.75	5.24	35.2
FR4	38.20	5.70	6.93	33.4
FR5	38.11	5.66	8.59	31.8
FR6	38.02	5.63	10.19	30.2
FR7	37.92	5.60	11.72	28.6
FR8	37.83	5.58	13.19	27.1
FR9	37.74	5.57	14.57	25.7
FR10	37.64	5.56	15.87	24.4

Sum = DLY + 0.318* WLX - 0.948*WLZ

5-3-2
Original Design Calculations

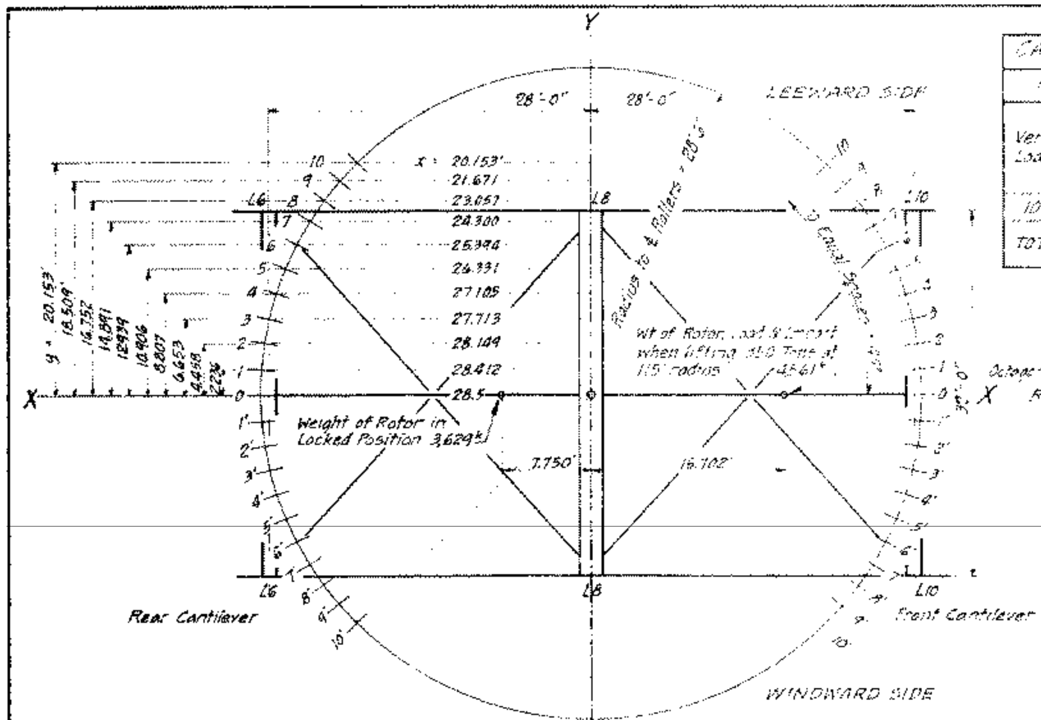

SUMMARY OF ROLLER LOADS

CASE I 350 Ton Lift + 10# Longitudinal Wind												
ROLLER №		0	1 1'	2 2'	3 3'	4 4'	5 5'	6 6'	7 7'	8 8'	9 9'	10 10'
Vert. Load	Average	110.2	110.2	110.2	110.2	110.2	110.2	110.2	110.2	110.2	110.2	110.2
	From Mom. ±	79.3	79.1	78.3	77.1	75.4	73.3	70.7	67.6	64.2	60.3	56.0
	Front Rollers	189.5	189.3	188.5	187.3	185.6	183.5	180.9	177.8	174.4	170.5	166.2
	Rear Rollers	30.9	31.1	31.9	33.1	34.8	36.9	39.5	42.6	46.0	49.9	54.2
10# Longitudinal W. ±		1.6	1.6	1.5	1.5	1.5	1.4	1.4	1.3	1.3	1.2	1.1
TOTAL	Front Rollers	191.1	190.9	190.0	188.8	187.1	184.9	182.3	179.1	175.7	171.7	167.3
	Rear Rollers	29.3	29.5	30.4	31.6	33.3	35.5	38.1	41.3	44.7	48.7	53.1

Simultaneous

SIDE			LEEWARD										0	WINDWARD									
ROLLER №			10	9	8	7	6	5	4	3	2	1	0	1'	2'	3'	4'	5'	6'	7'	8'	9'	[illegible]
CASE II 350 Ton Lift + 10# Trans. Wind																							
Vert. Load (Same as Case I)	Front Rollers		166.2	170.5	174.4	177.8	180.9	183.5	185.6	187.3	188.5	189.3	189.5	189.3	188.5	187.3	185.6	183.5	180.9	177.8	174.4	170.5	166.2
	Rear Rollers		54.2	49.9	46.0	42.6	39.5	36.9	34.8	33.1	31.9	31.1	30.9	31.1	31.9	33.1	34.8	36.9	39.5	42.6	46.0	49.9	54.2
10# Transverse Wind			+11.6	+10.5	+9.5	+8.4	+7.3	+6.2	+5.0	+3.8	+2.5	+1.3	0	-1.3	-2.5	-3.8	-5.0	-6.2	-7.3	-8.4	-9.5	-10.5	-11.6
TOTAL	Front Rollers		177.6	181.0	183.9	186.2	188.2	189.7	190.6	191.1	191.0	190.6	189.5	188.0	186.0	183.5	180.6	177.3	173.6	169.4	164.9	160.0	154.6
	Rear Rollers		65.6	60.4	55.5	51.0	46.8	43.1	39.8	36.9	34.4	32.4	30.9	29.8	29.1	29.3	29.8	30.7	32.2	34.2	36.5	39.4	42.8
CASE III Locked Position + 30# Trans. Wind																							
Vert. Load	Av. Load		88.2	88.2	88.2	88.2	88.2	88.2	88.2	88.2	88.2	88.2	88.2	88.2	88.2	88.2	88.2	88.2	88.2	88.2	88.2	88.2	88.2
	From Mom.	±	20.7	22.3	23.7	25.0	26.1	27.1	27.9	28.5	28.9	29.2	29.3	29.2	[illegible]	28.5	27.9	27.1	26.1	25.0	23.7	22.3	20.7
	Front Rollers		67.5	65.9	64.5	63.2	62.1	61.1	60.3	59.7	59.3	59.0	58.9	59.0	59.3	59.7	60.3	61.1	62.1	63.2	64.5	65.9	67.5
	Rear Rollers		108.9	110.5	111.9	113.2	114.3	115.3	116.1	116.7	117.1	117.4	117.5	117.4	117.1	116.7	116.1	115.3	114.3	113.2	111.9	110.5	108.9
30# Transverse Wind			+34.2	+31.4	+28.4	+25.3	+21.9	+18.5	+14.9	+11.3	+7.6	+3.8	0	-3.8	[illegible]	-11.3	-14.9	-18.5	-21.9	-25.3	-28.4	-31.4	-34.2
TOTAL	Front Rollers		101.7	97.3	92.9	88.5	84.0	79.6	75.2	71.0	66.9	62.8	58.9	55.2	51.7	48.4	45.4	42.6	40.2	37.9	36.1	34.5	33.3
	Rear Rollers		143.1	141.9	140.3	138.5	136.2	133.8	131.0	128.0	124.7	121.2	117.5	113.6	109.5	105.4	101.2	96.8	92.4	87.9	83.5	79.1	74.7

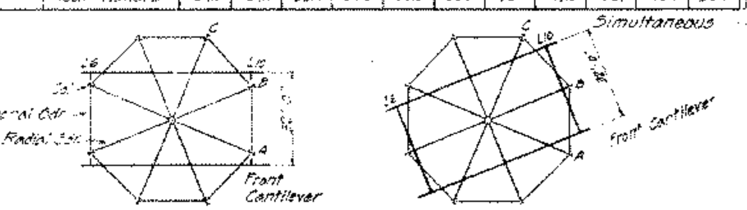

Cases I & III — Case Ia

POSITION OF ROTOR AND COLUMNS

CASE I - Simple Span - Roller 0 at center
(Case II with Roller 3 at center is practically the same)

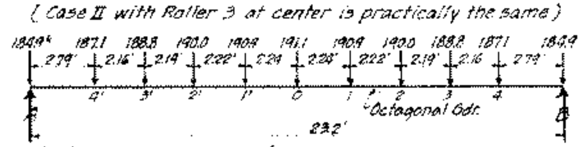

Maximum Shear = 853k
Maximum Moment = 5,709'k

CASE Ia - 2 Spans Continuous over 3 Supports (at same level). Reducing effect of continuity over eight supports ignored.
(For design of Splice Plates at Column)

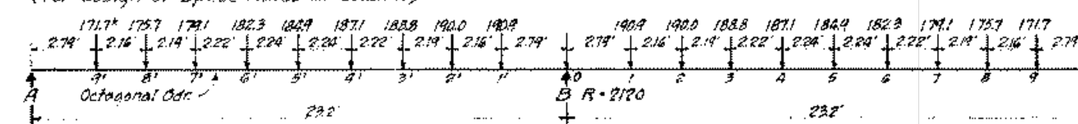

Max. Moment at B (continuous girder) = -5,474'k
Corresponding moment for simultaneous loads on rear rollers = -1067'k
Max. Shear = 1060k

Max. Load on support (Column) B from front and rear rollers (Octagonal Girders and Vertical Trusses next below Octagonal Girders continuous over eight elastic supports) = 1560k

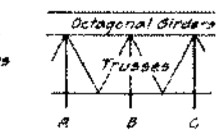

CASE III - Front Rollers

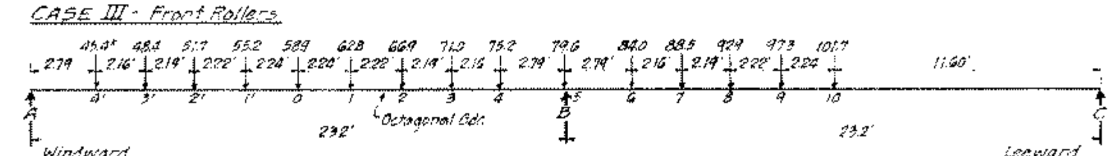

Max Simple Span Moment = 1,816'k (at Roller 9)

Note.
To provide rigidity for roller path, Octagonal and Radial Girders are designed of a strength greater than stress requirements.

RADIAL GIRDERS

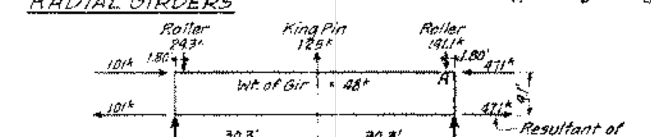

Reactions
Continuity + 55.6k ... - 55.6k
Roller Load + 34.1 ... + 186.3
Wt. of Gir. + 24.0 ... + 24.0
+ 113.7k ... + 154.7k
King Pin - 62.5k ... - 62.5k

Shear, 154.7 @ 5.0 = 31.0 □" read. Web Pl. 106 x 9/16 = 59.6 □"

Moment	At Center	At A	At End
Continuity	+ 2610'k	+ 4190'k	+ 4290'k
Roller Load	+ 198'k	+ 335'k	0
Wt. of Gir.	+ 364'k	+ 42'k	0
King Pin	- 1897'k	- 119'k	0
Maximum Moment	+ 3172'k	+ 4537'k	+ 4290'k
@ 8.9' Flange Stress @ 16k	356k	509k	481k
Flange Area Read. Net	22.3 □"	31.8 □"	30.0 □"
⅛ of Web (106 x 9/16)	7.4 □"	7.4 □"	7.4 □"
2 Ls 8 x 8 x ⅝, 22.9 □"gr.	17.1 □"	17.1 □"	17.1 □"
2 Covs. 18 x ⅝, 27.0 □"gr.		23.7 □"	23.7 □"
Flange Area	24.5 □" net	48.2 □" net	48.2 □" net

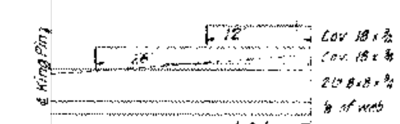

TOTAL NUMBER OF ROLLERS = 80 (18 rear and 42 front)
TOTAL NUMBER OF ROLLERS IN ACTION = 42

Section Modulus of Active Rollers { About Axis Y-Y = 961' ; " " X-X = 334' }

For Part Plan of Rotor showing Tread Girders, see Sheet № 9.
For Plan of Girders (Octagonal and Radial) at Top of Tower, see Sheet № 5.

LOADING CASES

CASE I	CASE II	CASE III
350 Ton Load at 115' radius. 10#/□' Longitudinal Wind	350 Ton Load at 115' radius. 10#/□' Transverse Wind.	No Live Load. Crane Locked with trolleys and cranes in storage position. 30#/□' Transverse Wind.

ASSUMED LOADS All Live Loads include Impact.

350 TON TROLLEY OPERATING AT 115' RADIUS

	Weight	Arm	Moment
Rotor + Counterweight	3,126k	- 11.666'	- 36,468'k
350 Ton Trolley + Load	1,144k	+ 115'	+ 131,560'k
50 T. Trolley, Idle	38k	+ 190'	+ 7,220'k
15 T. Crane, Idle	250k	- 103.94'	- 25,985'k
* Ropes on Drum from 50 T. Trolley	3k	- 49'	- 147'k
	4,561k	+ 16.702	+ 76,180'k

From Rotor, av. load per roller = 4561/42 = 108.5k
Wt. of Roller + Spider 1.7k
110.2k
From Moment, Load on Roller 0 = 76,180/961 = ± 79.3k
Load on other rollers = ± 79.3 x x/28.5
Max. Load, Roller 0 = 110.2 + 79.3 = 189.5k

LOCKED POSITION

	Weight	Arm	Moment
Rotor + Counterweight	3,126k	- 11.666'	- 36,468'k
350 T. Trolley, Idle	190k	+ 16.5'	+ 3,130'k
50 Ton " "	38k	+ 190'	+ 7,220'k
15 " Crane "	250k	0	0
* Ropes on Drums { from 350 T. Trol.	22k	- 84.5'	- 1,859'k
" 50 T. "	3k	- 49'	- 147'k
	3,629k	- 7.750'	- 28,124'k

From Rotor, av. load per roller = 3629/42 = 86.5k
Wt. of Roller + Spider 1.7k
88.2k
From Moment, Load on Roller 0 = 28,124/961 = ± 29.3k
Load on other rollers = ± 29.3k x x/28.5

10# Longitudinal Wind produces Overturning Moment of 1,500'k — On Roller 0 = 1500/961 = ± 1.56k, Other rollers = ± 1.56k x x/28.5
10# Transverse " " " " 3,800'k — " " 10 = 3800/334 = ± 11.4k, " " = ± 11.4k x y/20.153
30# Transverse " " " " 11,400'k — " " 10 = 11400/334 = ± 34.1k, " " = ± 34.1k x y/20.153

Weight of Rollers + Spider = 134k — From Rollers + Spider, Load per roller = 1.7k
Wt. of Octagonal Girders + Lower Track 360k = 45k per gir.

* These loads are the weight of rope wound on the drums in the engine house when the hoists are raised to their idle position. When hoists are in action with hooks at their lowest position, this rope is in the falls, and its weight has been included in the weight of the active trolleys.

PINION MOMENT ON TOP FLANGE

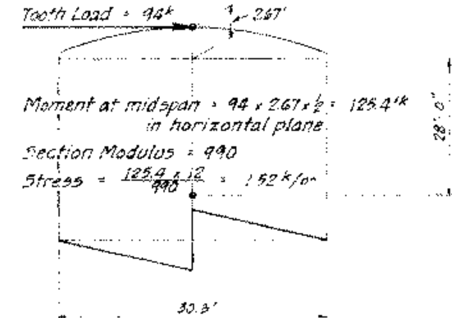

Moment at midspan = 94 x 2.67 x ½ = 125.4'k in horizontal plane.
Section Modulus = 990
Stress = 125.4 x 12 / 990 = 1.52 k/□"

MOMENT FROM SPUD LOCK

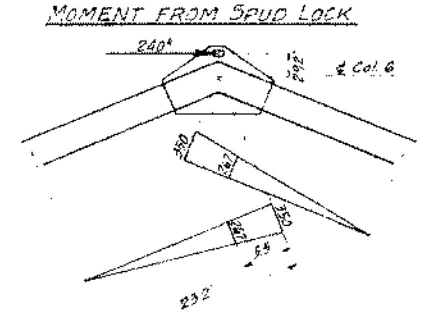

Moment is divided equally between two girders.
Maximum Moment = 240 x 2.92 / 2 = 350'k at Col. ctr.
Moment 5.5 from Col. at effective edge of gusset,
= 350 x (23.2 - 5.5)/23.2 = 267'k
Stress = 267 x 12 / 990 = 3.24 k/□"

OCTAGONAL GIRDERS

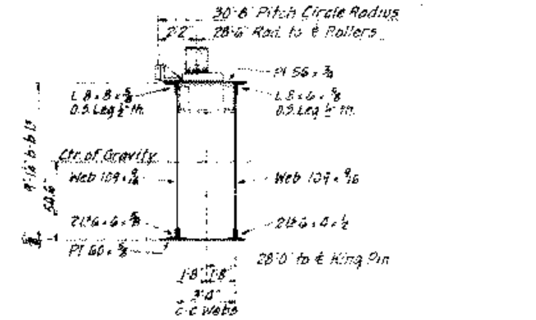

Gross Section Modulus = 8400 (Top) Net Sec. Mod. = 6930 (Bottom)
Sec. Mod. of Top Flge. about vert. axis (Top Cov., Top Ls + ¼ of webs) = 990

Shear Case I 1060k — D/t = 73
From Wt. of Girs. 23k — Allowable Stress = 9.2
1083k — 1083 ÷ 9.2 = 118.0 □" read.
2 Web Pls 109 x 9/16 = 122.8 □"

Moment, Case I (Simple Span) 5709'k
From Wt. of Girs. = 45 x 23.2 / 8 = 131'k
5840'k

Stress in Bottom Flange = 5840 x 12 / 6930 = 10.12 k/□"
Stress in Top Flange. From vertical forces = 5840 x 12 / 8400 = 8.35 k/□"
From Pinion 1.52 k/□"
Allowable Stress = 16 k/□" — Used = 9.87 k/□"

For Combination with Spud Lock Stress
Moment, Case III (front rollers) 1816'k
From Wt. of Girs. 131'k
1947'k

Stress in Top Flange From vertical forces = 1947 x 12 / 8400 = 2.73 k/□"
From Spud Lock 3.24 k/□"
5.97 k/□"

Splice Flanges for Continuity at Column

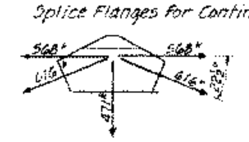

Moment Case I 5474'k
From Wt. of Girs. 131'k
5605'k
Stress = 5605/9.1 = 616k, x cos 22½° = 568k
568k @ 16.0 = 35.5 □" read.
Pl. 84 x ⅞ = 63.0 □" = 26.2 □" net
Pl. 24 x ¾ = 18.0 □" = 13.6 "
40.0 □" net

Radial Component
= 616 x 2 sin 22½° = 471k

117480
MH 110
PW#36395-

DESIGN OF OCTAGONAL GIRS & RADIAL GIRS.
350 TON HAMMERHEAD CRANES
RIM BEARING TYPE
ONE CRANE FOR NEW YORK NAVY YARD
ONE CRANE FOR NORFOLK NAVY YARD

ORDER Nos H-2221 to 2240.
INQUIRY № P-2371.
In Charge of V.D.B.
Revised 4-8-39 5-15-39

American Bridge Company.
Pittsburgh, Pa.
March 22, 1939

Sheet № 13 of

ATTACHMENT 6
Tower Calculation Details

ATTACHMENT

Table of Contents

Attachment 6 – Tower Calculation Details
- 6-1 – Finite Element Analysis Model
  - 6-1-1 – RISA-3D™ Model
  - 6-1-2 – RISA-3D™ Model Loadings
  - 6-1-3 – RISA-3D™ Model Graphical Deflections
  - 6-1-4 – RISA-3D™ Model Code Checks
- 6-2 – Tower Base Analysis
  - 6-2-1 – Anchor Bolt Capacity
  - 6-2-2 – Column Base Code Check
- 6-3 – Slew Ring Structural Analysis
- 6-4 – Original Construction Arrangement Drawings

6-1
Finite Element Analysis Model

6-1-1

RISA-3D™ Model

This section provides an overview of the structural model of the Tower compiled in the RISA-3D™ structural analysis software. Members are named at each level of the structure, and can be used to review the member design results shown in Attachment 6-1-4.

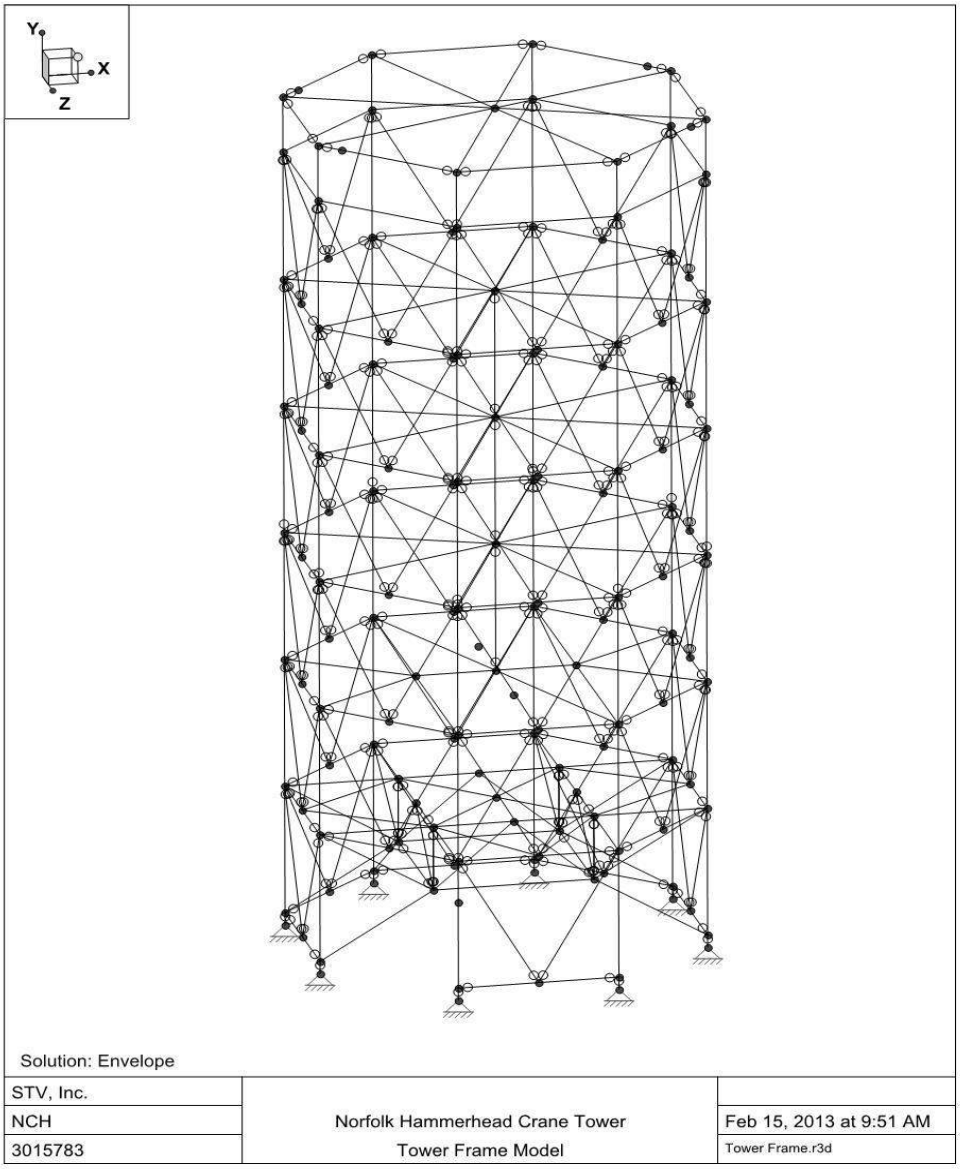

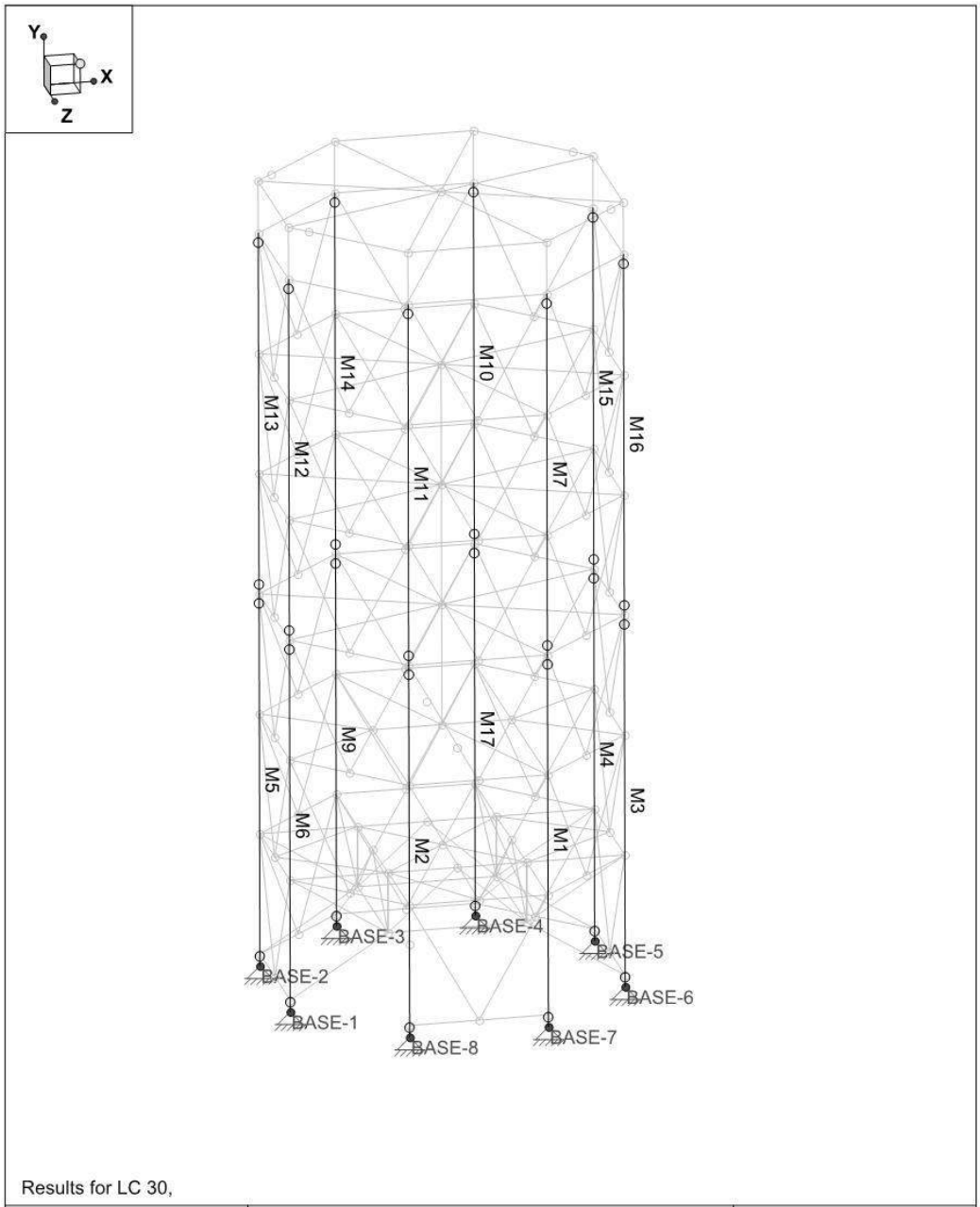

Results for LC 30,

STV, Inc.	Norfolk Hammerhead Crane Tower	2
NCH		May 3, 2013 at 2:41 PM
3015783		Tower Frame.r3d

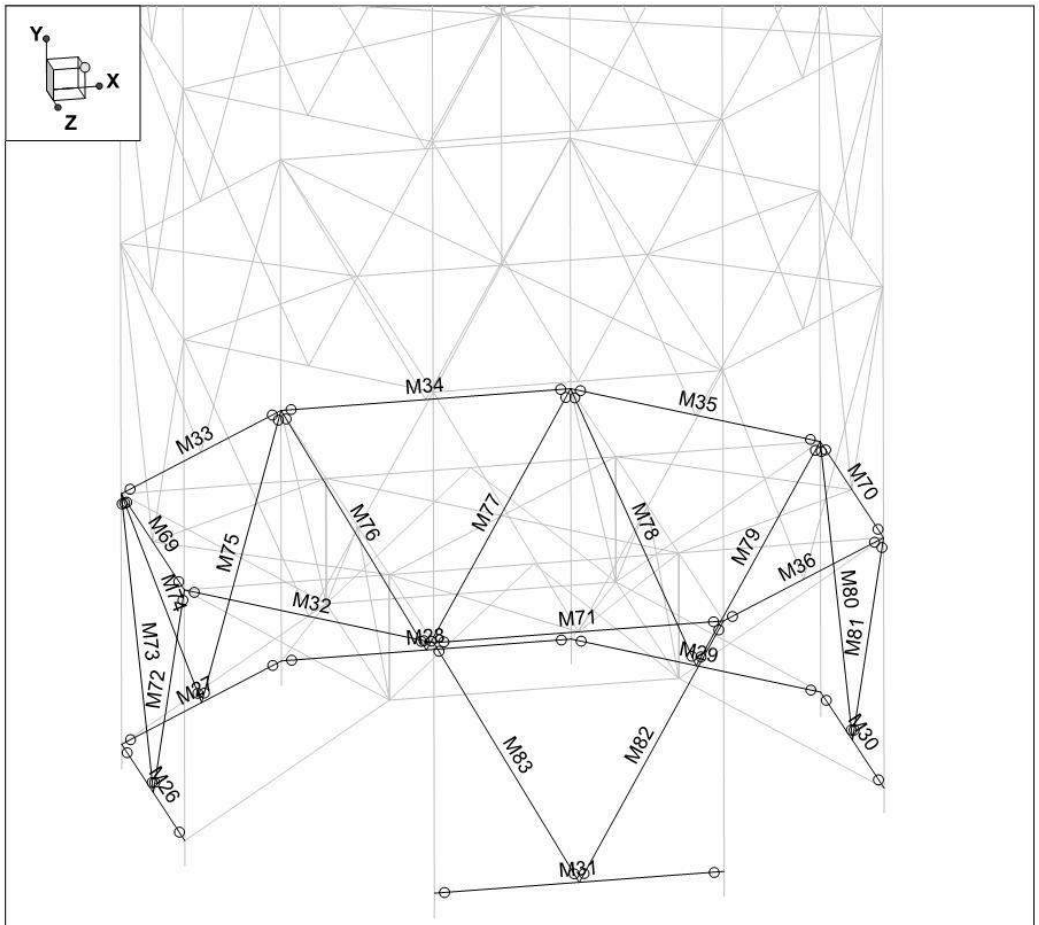

Results for LC 30,

STV, Inc.		5
NCH	Norfolk Hammerhead Crane Tower	May 3, 2013 at 2:47 PM
3015783	First Level Perimeter Members	Tower Frame.r3d

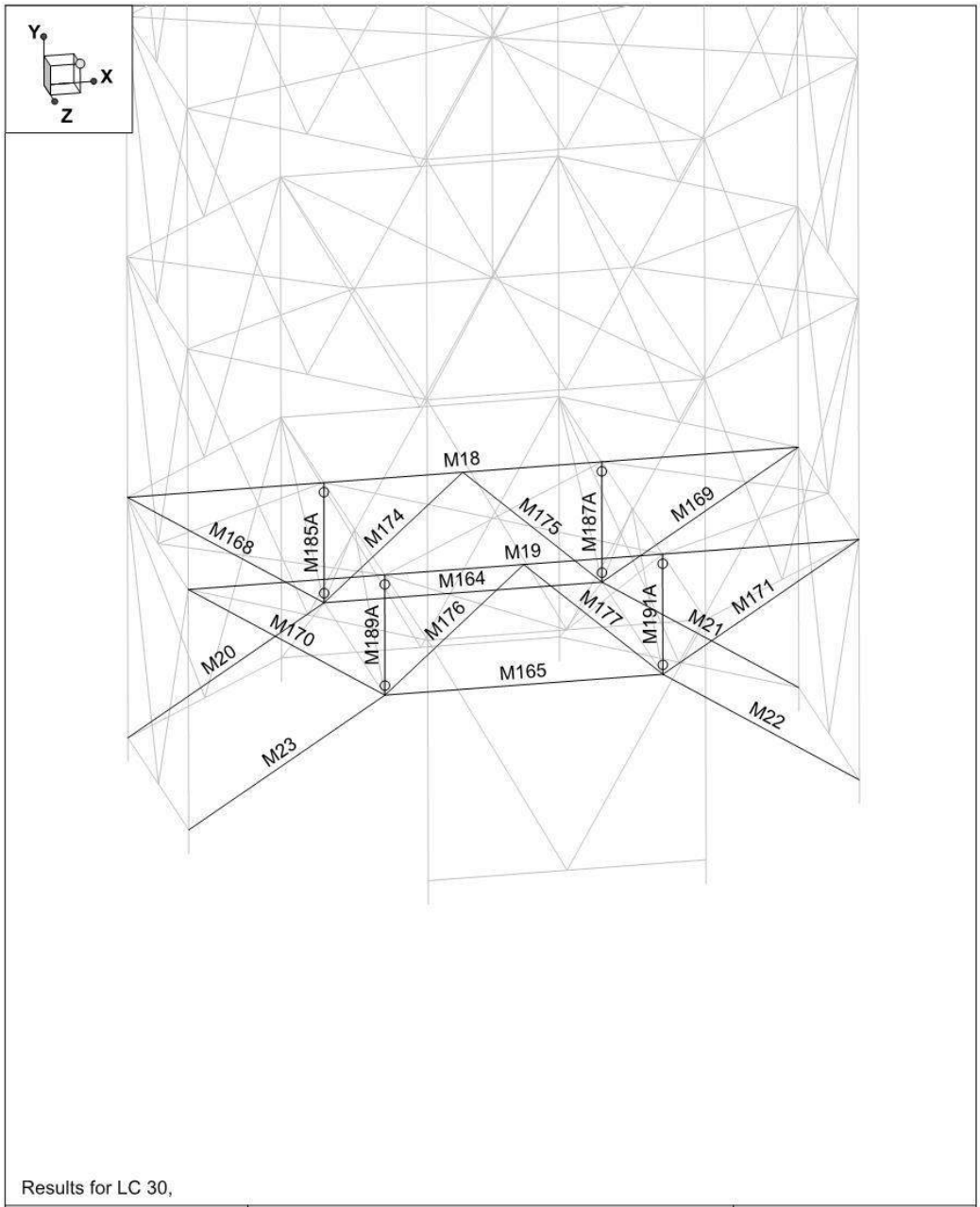

Results for LC 30,

STV, Inc.		8
NCH	Norfolk Hammerhead Crane Tower	May 3, 2013 at 2:53 PM
3015783	First Level Brace Members	Tower Frame.r3d

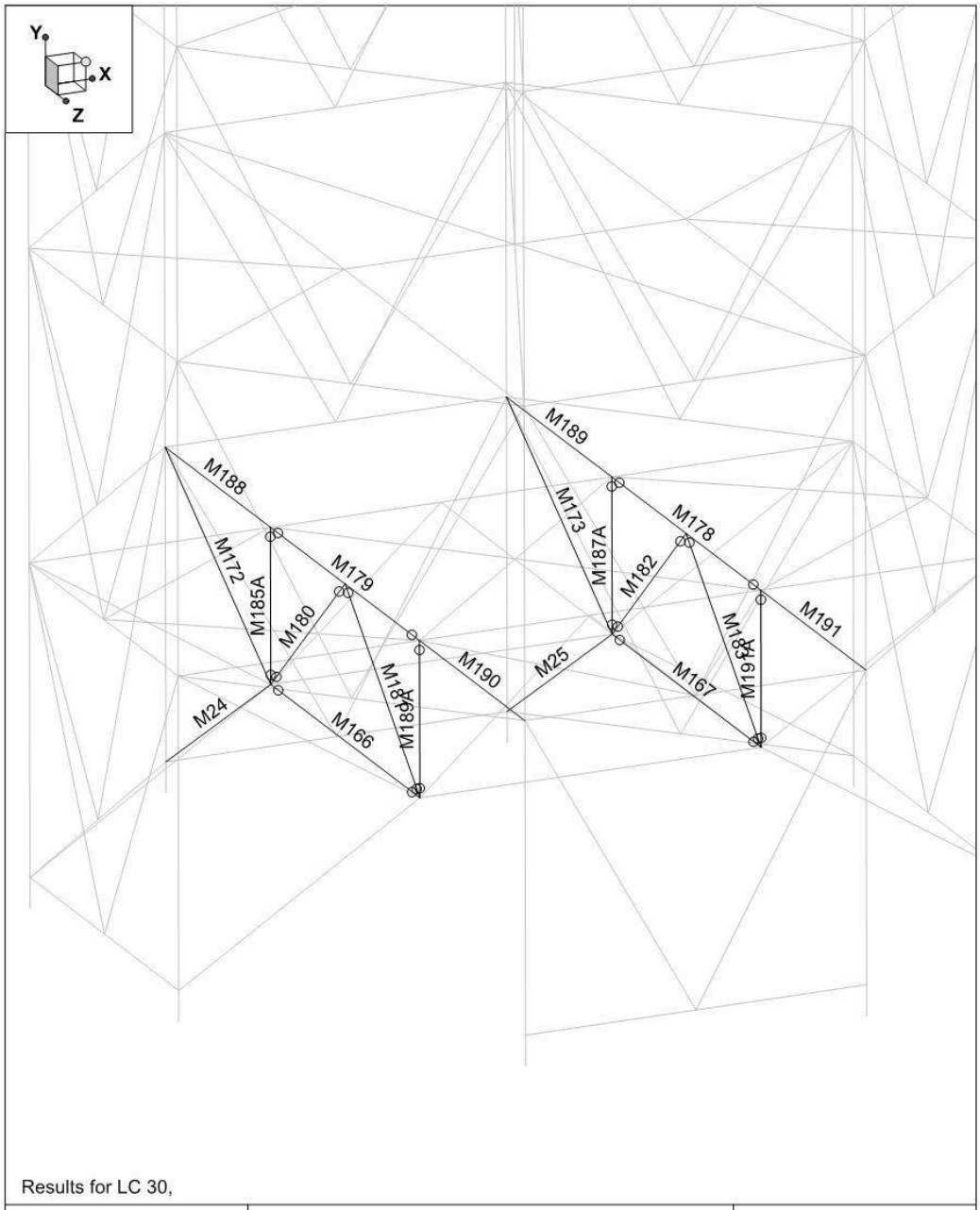

Results for LC 30,

STV, Inc.		9
NCH	Norfolk Hammerhead Crane Tower	May 3, 2013 at 2:56 PM
3015783	First Level Brace Members	Tower Frame.r3d

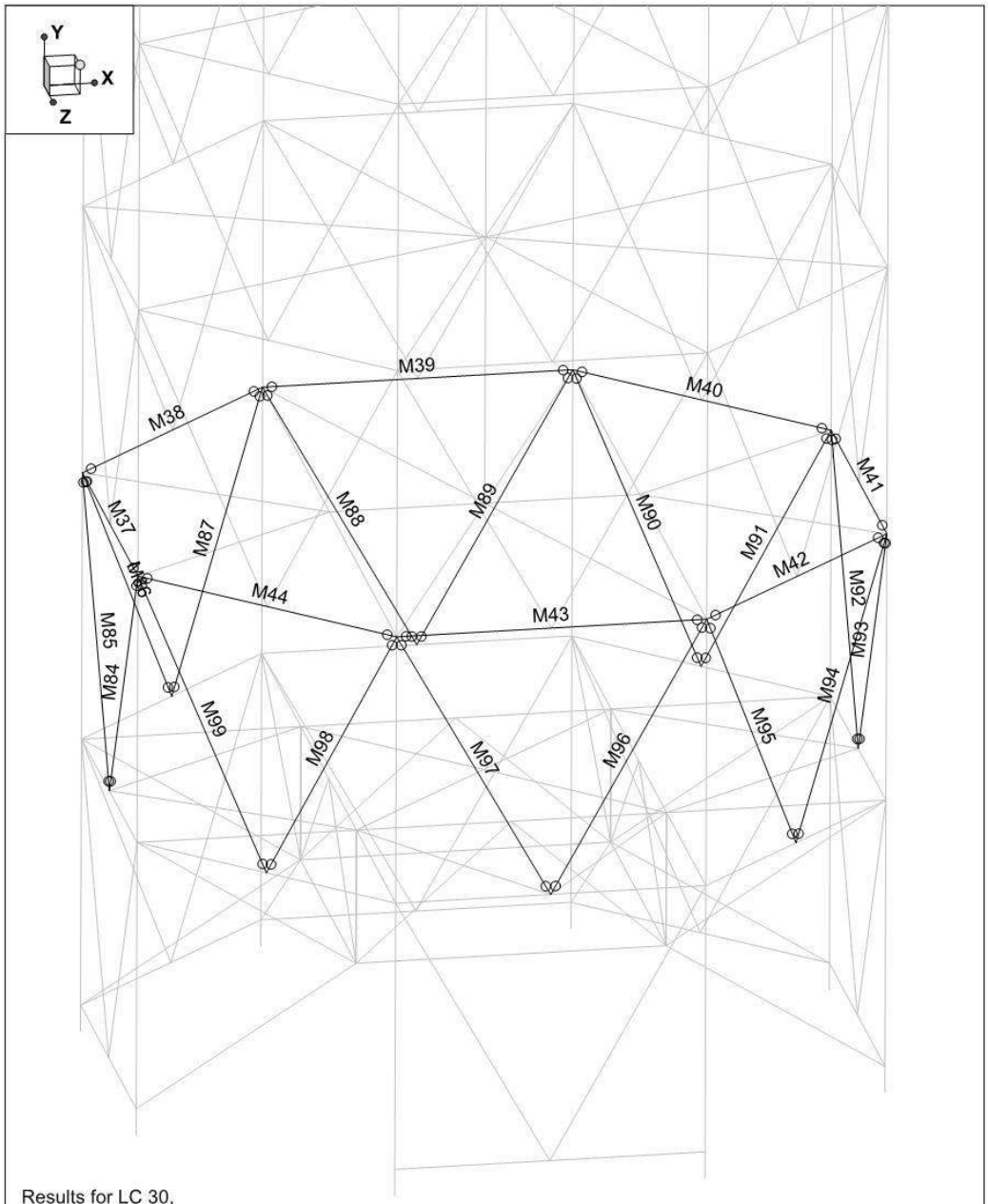

Results for LC 30,

STV, Inc.		10
NCH	Norfolk Hammerhead Crane Tower	May 3, 2013 at 2:59 PM
3015783	Second Level Perimeter Members	Tower Frame.r3d

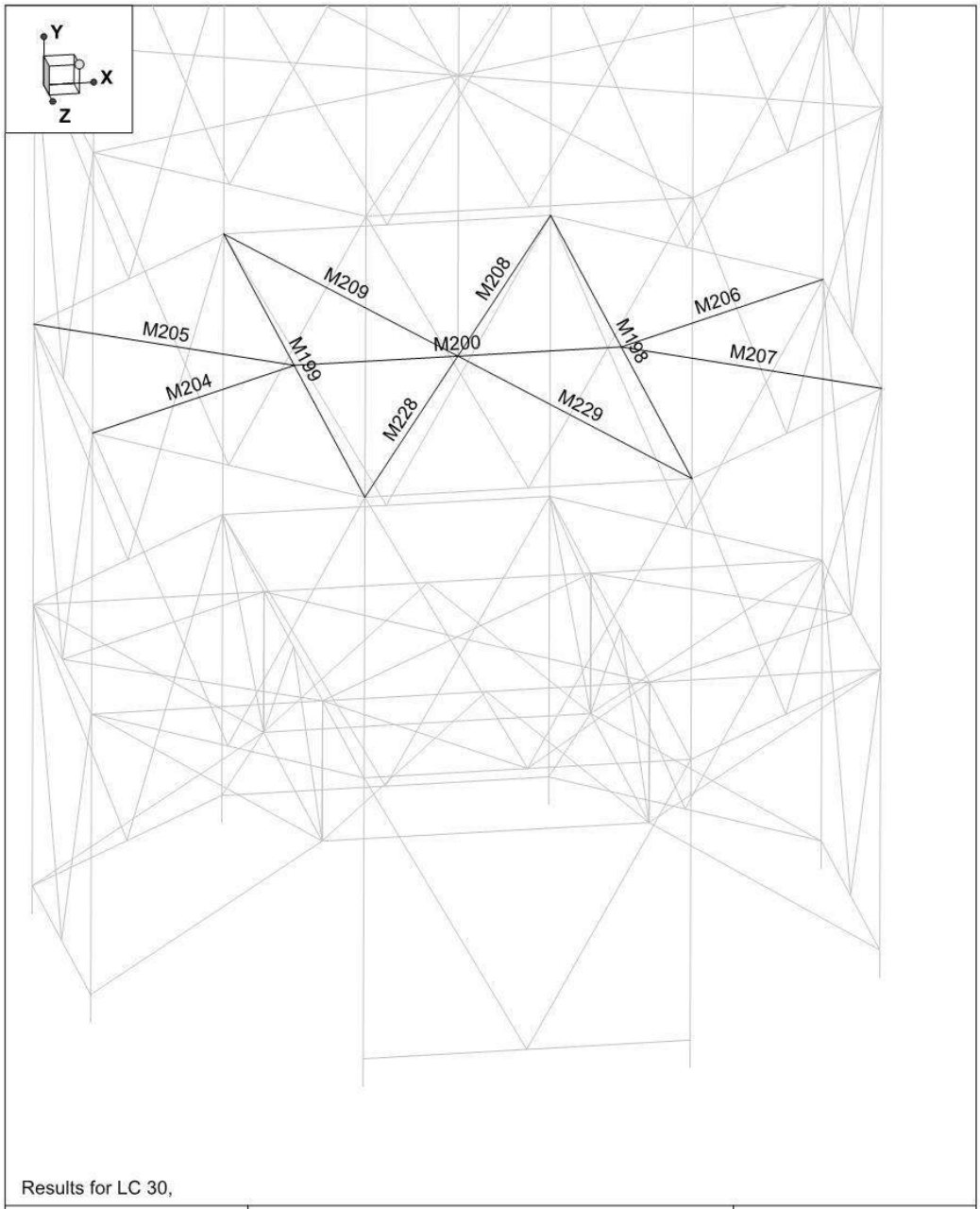

Results for LC 30,

STV, Inc.		12
NCH	Norfolk Hammerhead Crane Tower	May 3, 2013 at 3:02 PM
3015783	Second Level Horizontal Brace Members	Tower Frame.r3d

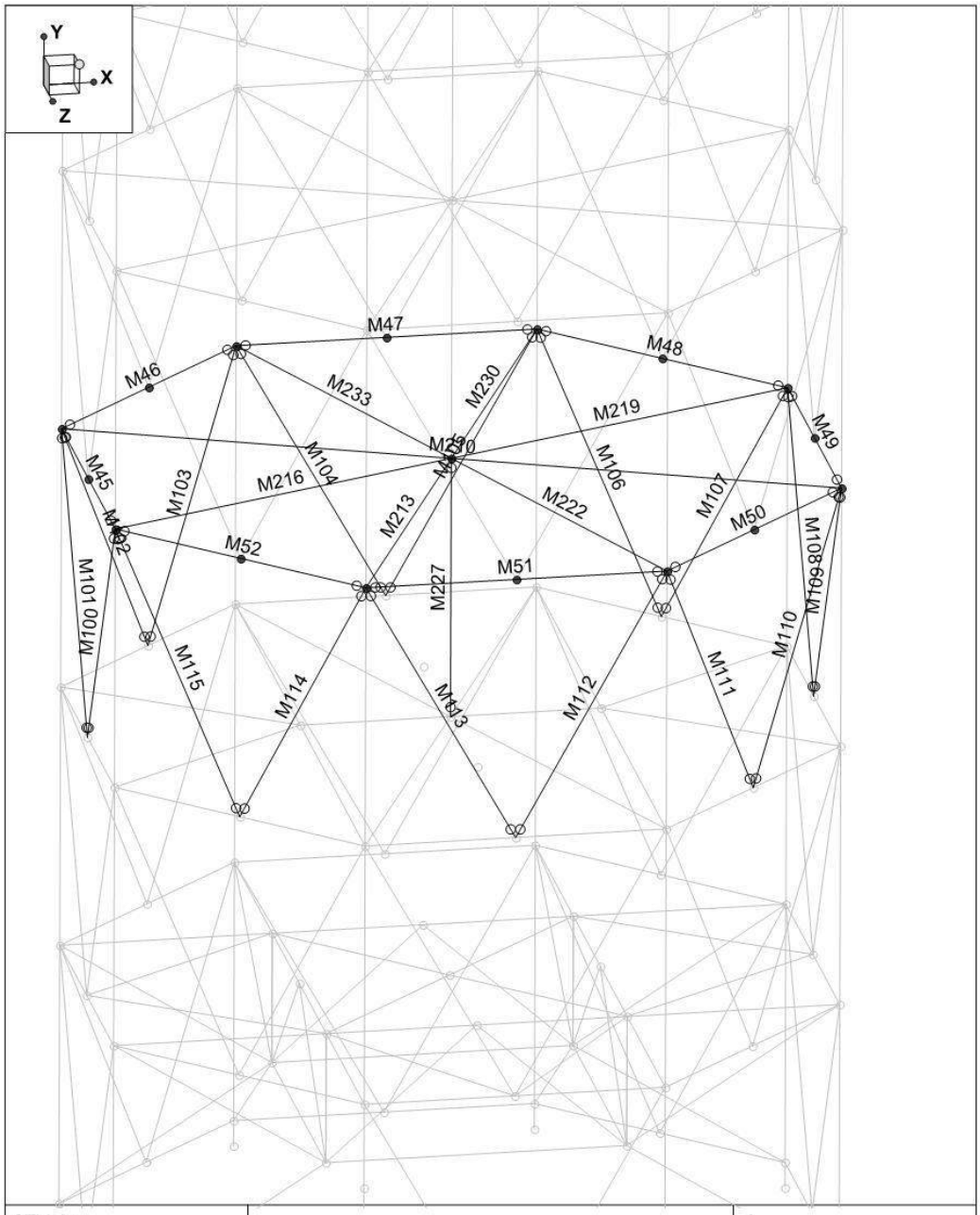

STV, Inc.		3
NCH	Norfolk Hammerhead Crane Tower	May 6, 2013 at 2:11 PM
3015783	Third Level Members	Tower Frame.r3d

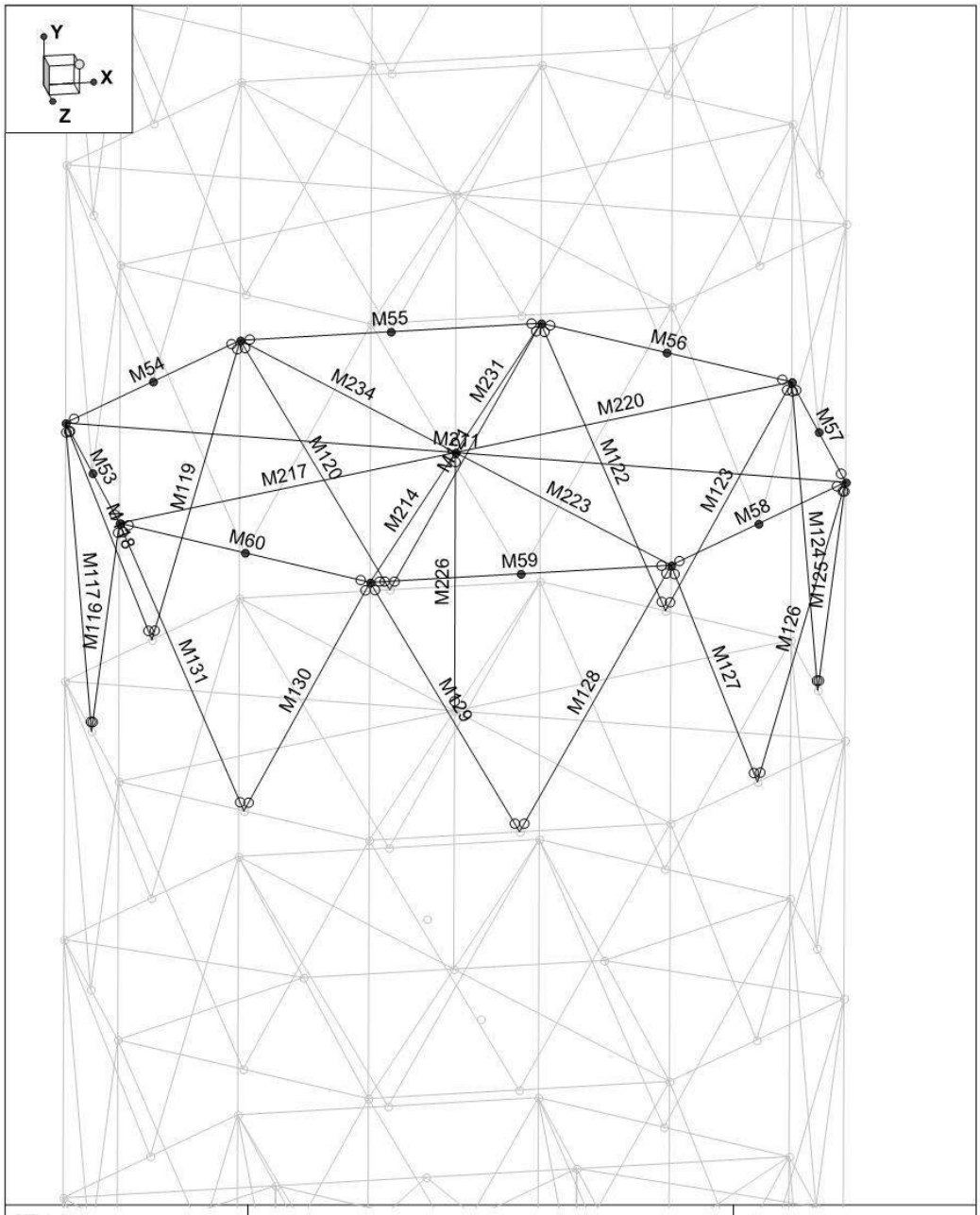

STV, Inc.		4
NCH	Norfolk Hammerhead Crane Tower	May 6, 2013 at 2:12 PM
3015783	Fourth Level Members	Tower Frame.r3d

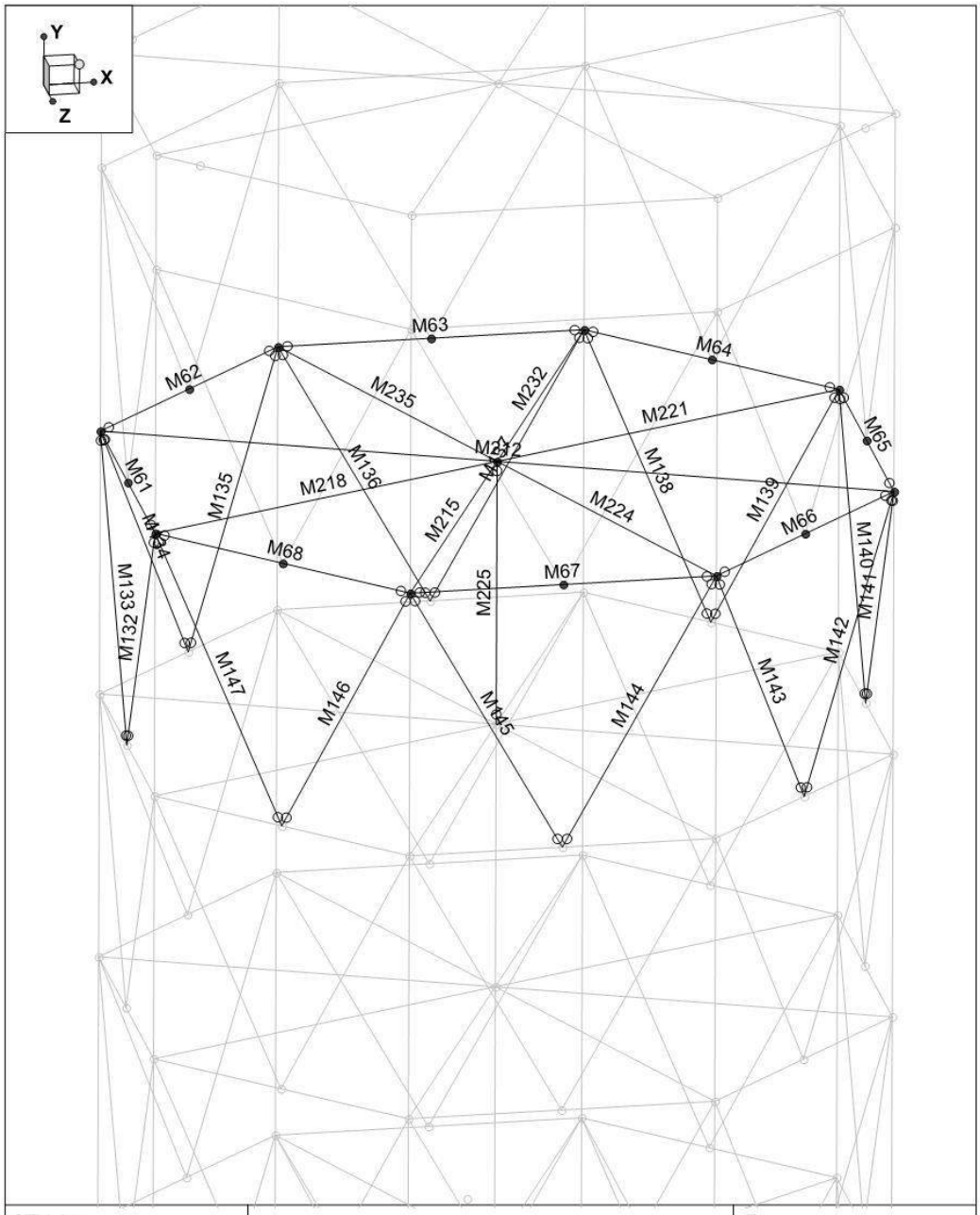

STV, Inc.		7
NCH	Norfolk Hammerhead Crane Tower	May 6, 2013 at 2:14 PM
3015783	Fifth Level Members	Tower Frame.r3d

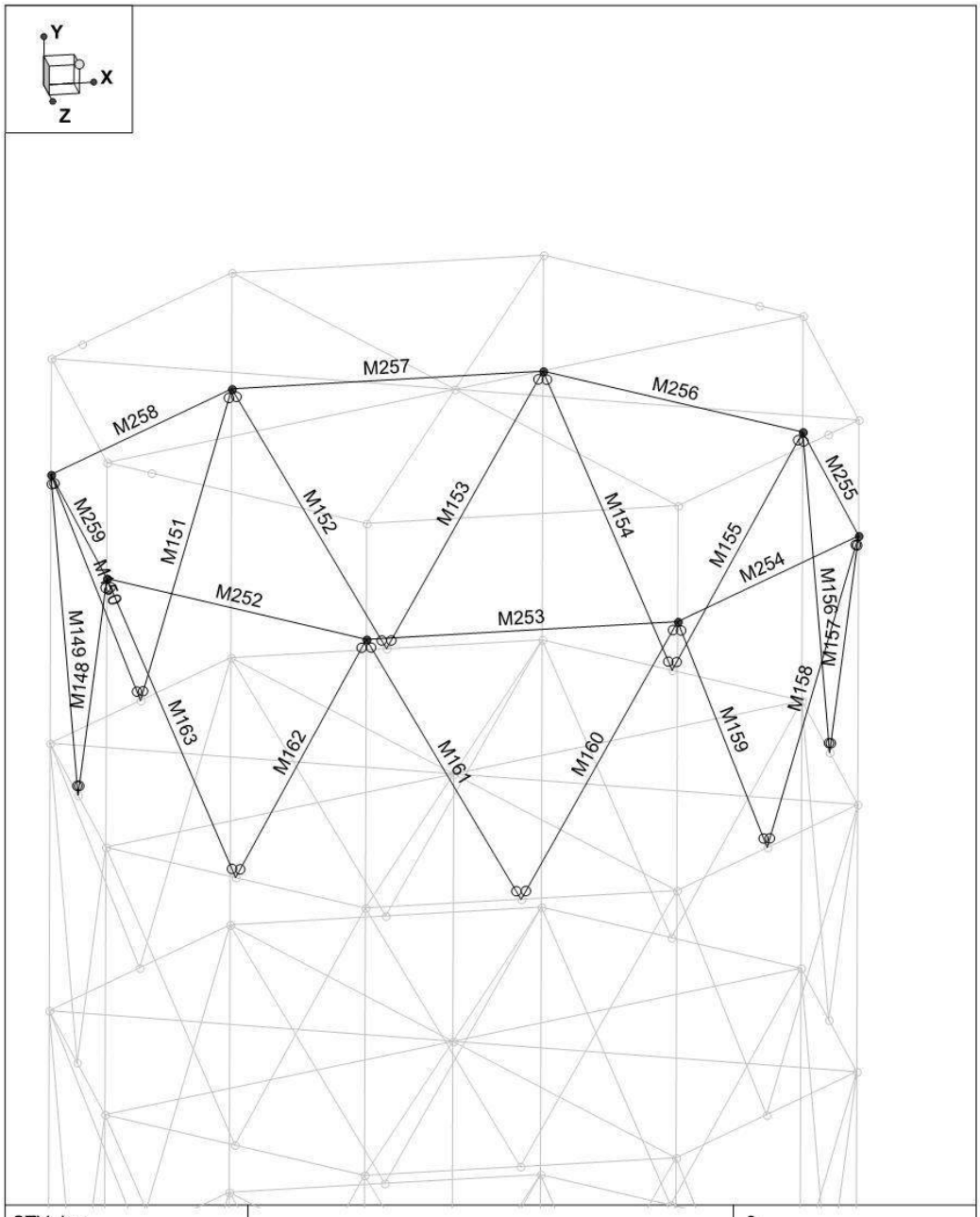

STV, Inc.		9
NCH	Norfolk Hammerhead Crane Tower	May 6, 2013 at 2:16 PM
3015783	Sixth Level Members	Tower Frame.r3d

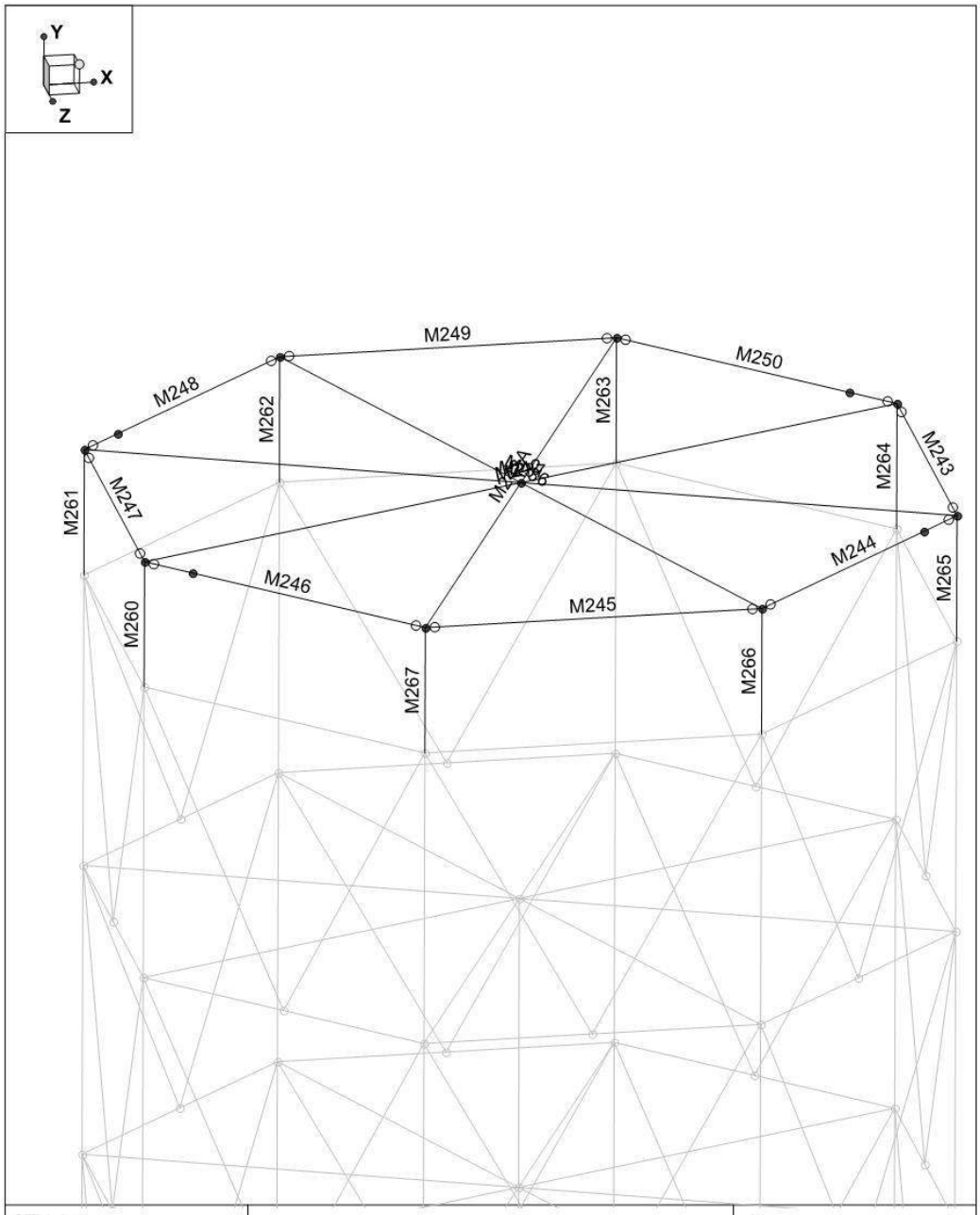

STV, Inc.		11
NCH	Norfolk Hammerhead Crane Tower	May 6, 2013 at 2:18 PM
3015783	Slew Ring Members	Tower Frame.r3d

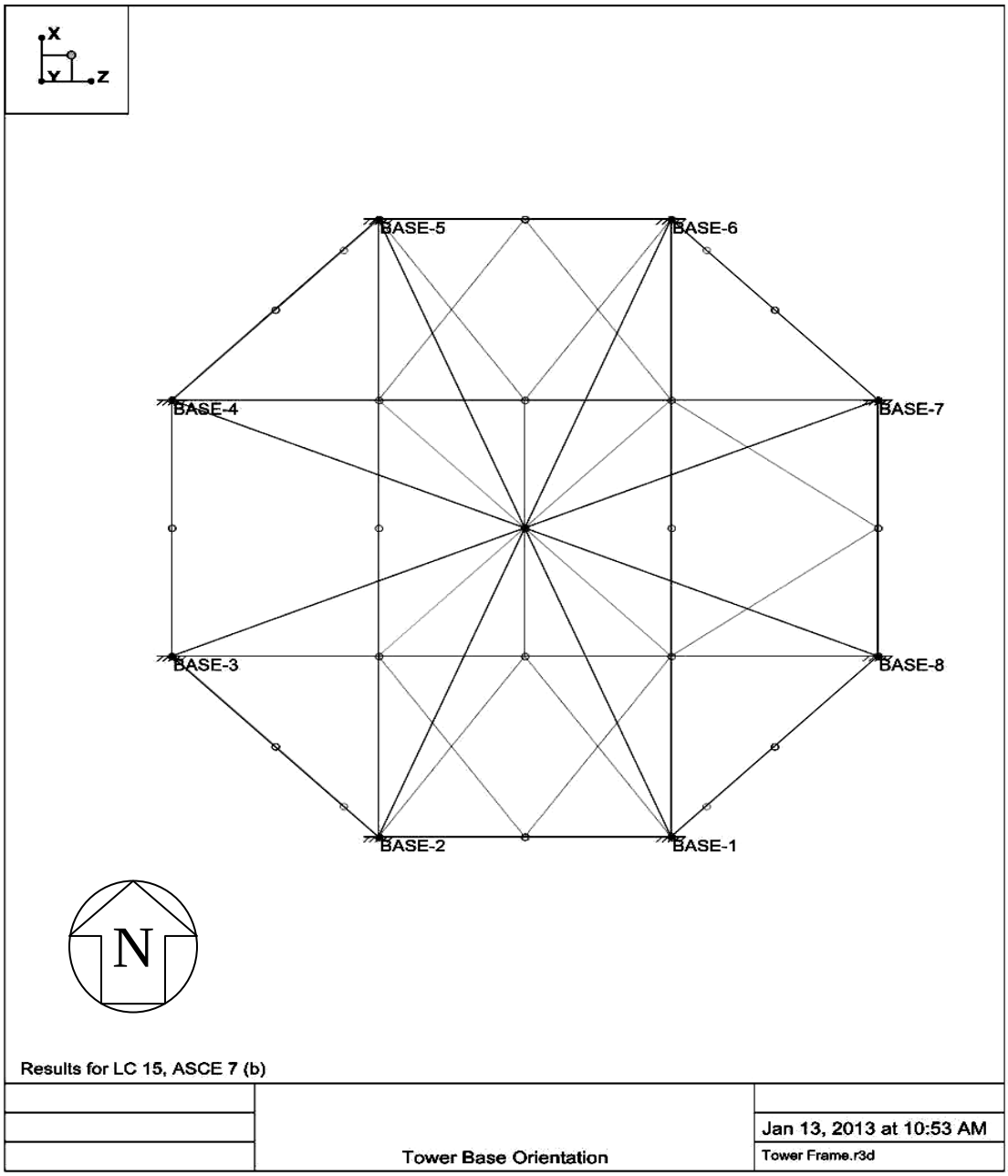
X
Y
Z
BASE-5
BASE-6
BASE-4
BASE-7
BASE-3
BASE-8
BASE-2
BASE-1
N
Results for LC 15, ASCE 7 (b)
Jan 13, 2013 at 10:53 AM
Tower Base Orientation
Tower Frame.r3d

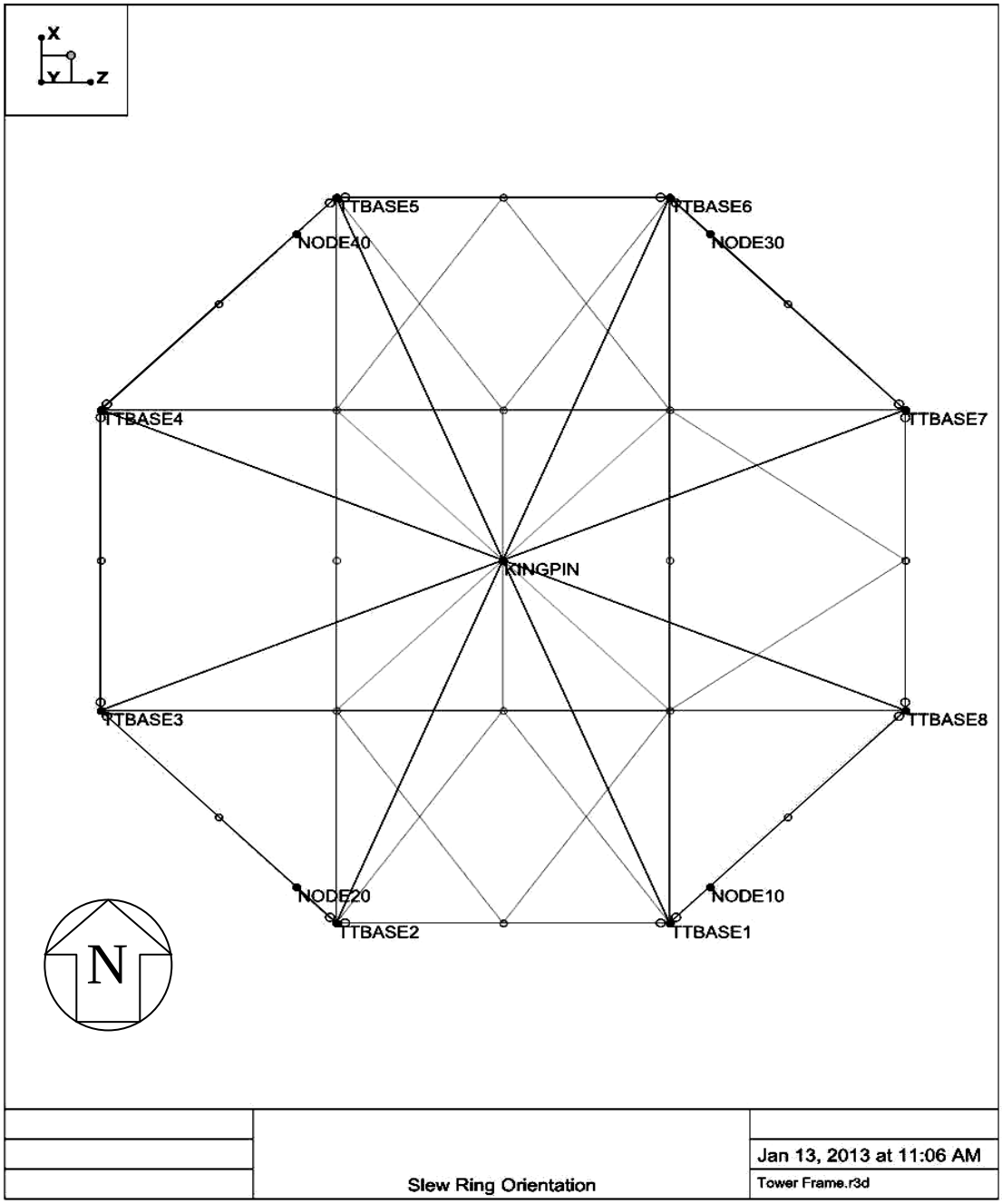
X
Y
Z
TTBASE5
TTBASE6
NODE40
NODE30
TTBASE4
TTBASE7
KINGPIN
TTBASE3
TTBASE8
NODE20
NODE10
TTBASE2
TTBASE1
N
Jan 13, 2013 at 11:06 AM
Slew Ring Orientation
Tower Frame.r3d

6-1-2

RISA-3D™ Model Loadings

This attachment graphically shows the Dead Load case and the two directions of Wind Load cases applied to the Tower model. For the Dead Load case shown on this page, member self-weights are not shown for clarity but were included in the analysis.

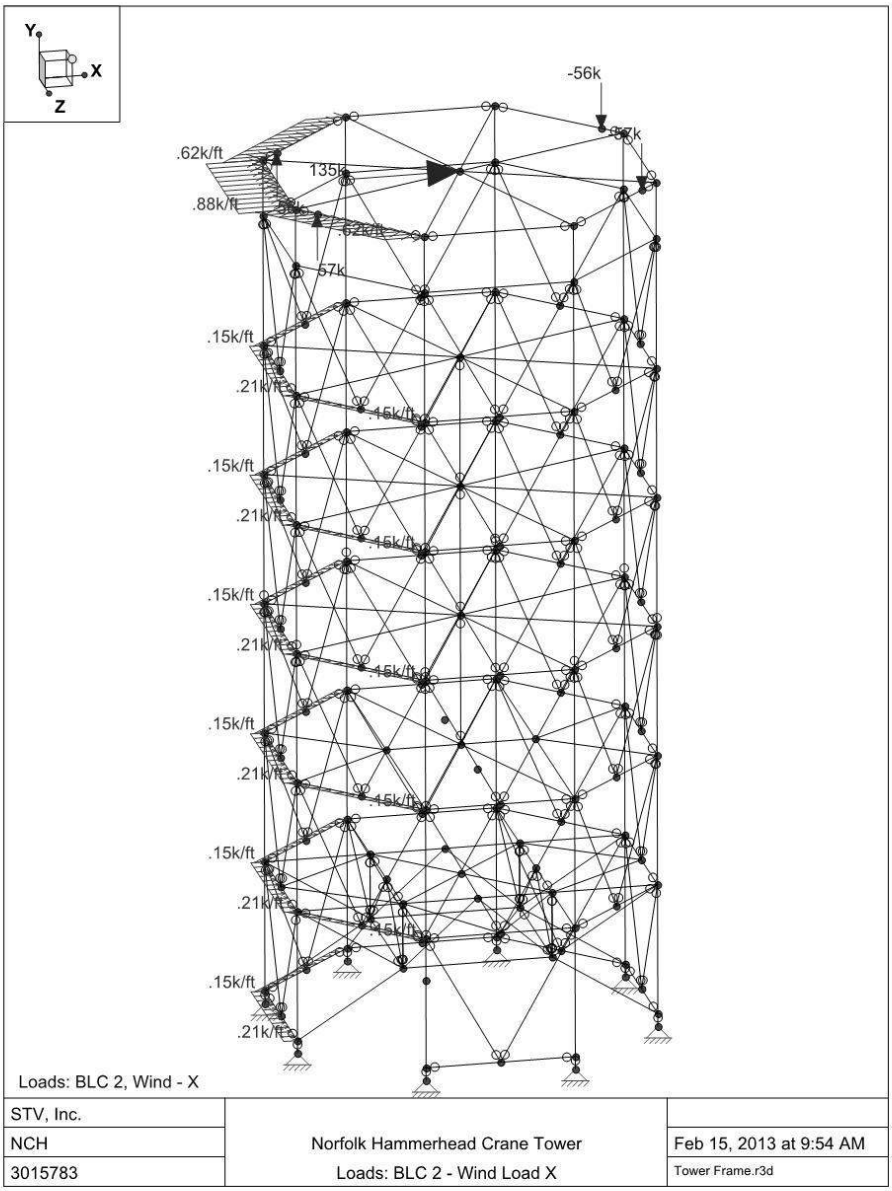

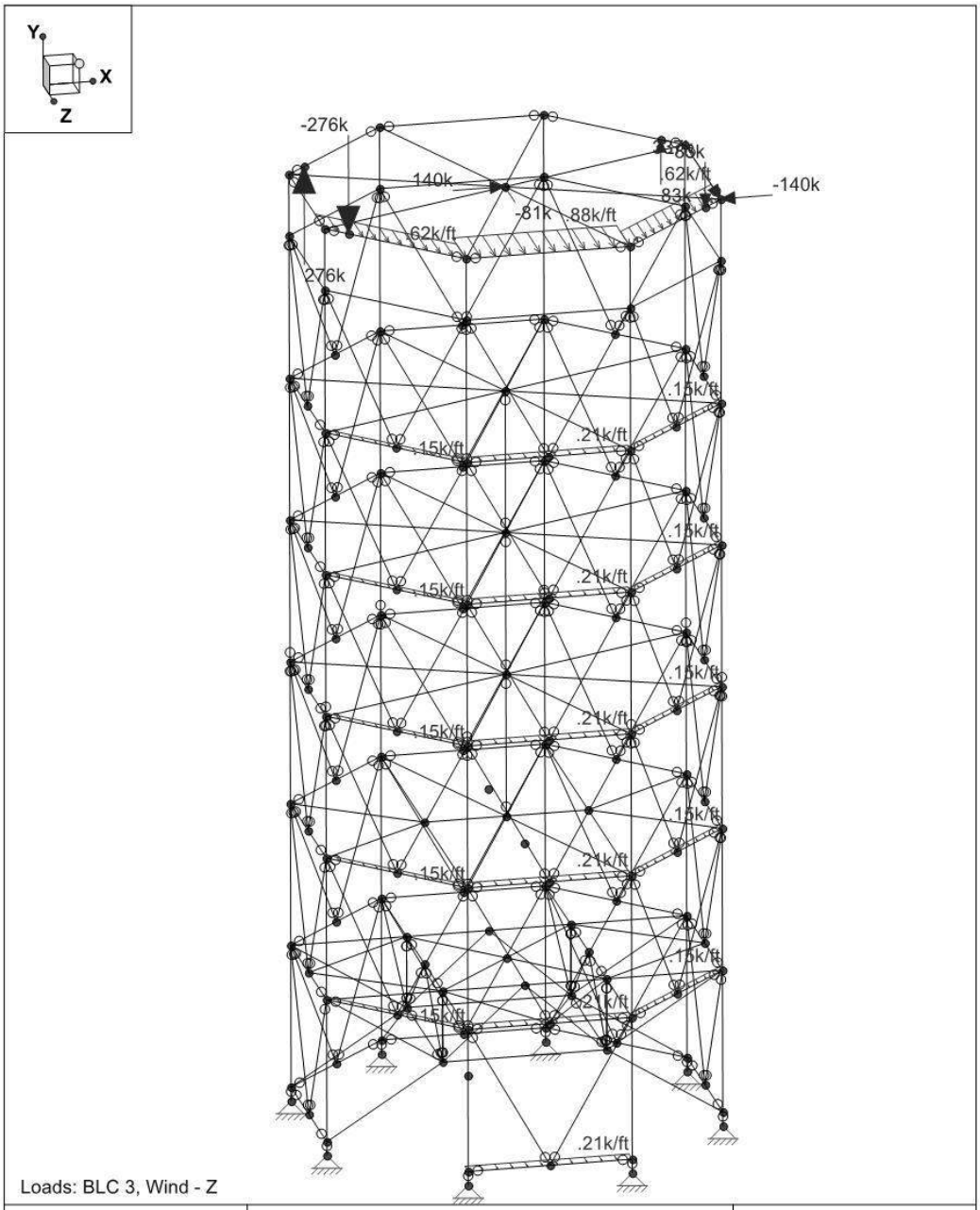

STV, Inc.		
NCH	Norfolk Hammerhead Crane Tower	Feb 15, 2013 at 9:55 AM
3015783	Loads: BLC 3 - Wind Load Z	Tower Frame.r3d

6-1-3
RISA-3D™ Model: Graphical Deflections

Deflections under X-Direction Wind

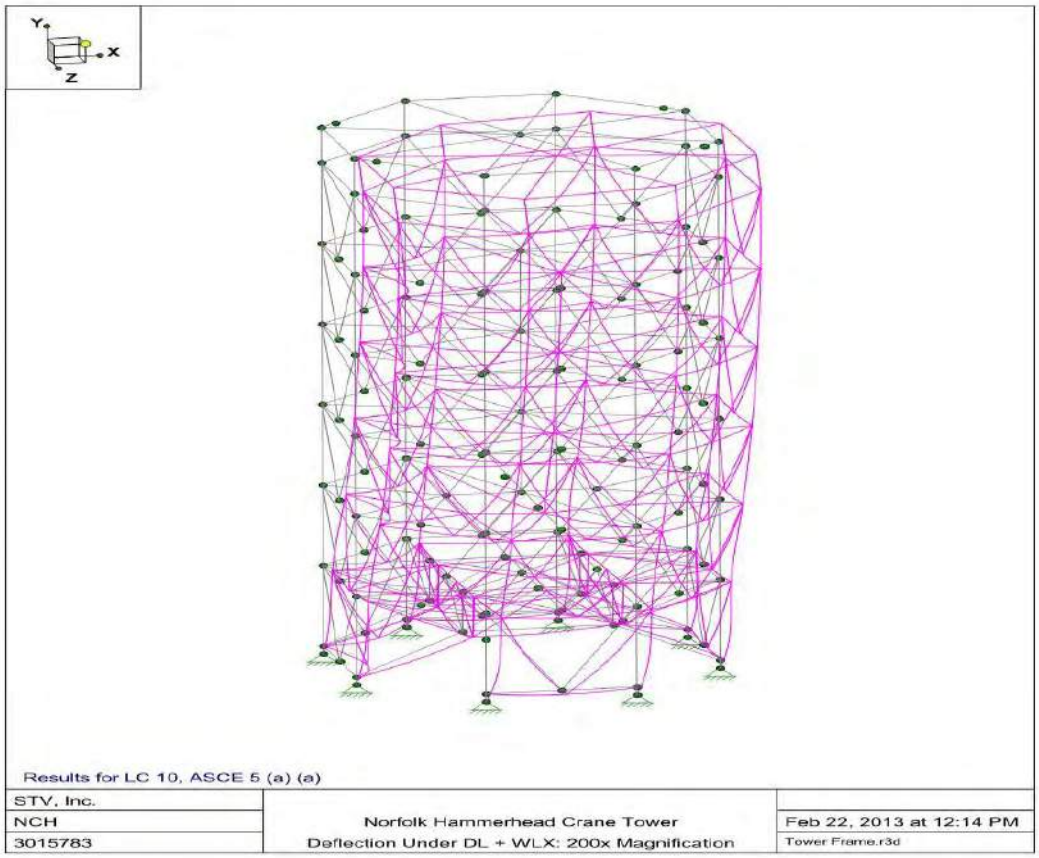

Joint Label	X [in]	Y [in]	Z [in]	X Rotation [rad]	Y Rotation [rad]	Z Rotation [rad]
TTBASE1	-1.412	-0.459	-0.012	-3.14E-06	-4.94E-05	7.43E-04
TTBASE2	-1.398	-0.46	-0.012	-3.39E-06	-4.89E-05	7.43E-04
TTBASE3	-1.388	-0.313	-0.002	-7.42E-07	-4.89E-05	7.40E-04
TTBASE4	-1.388	-0.107	0.011	-9.91E-07	-4.94E-05	7.41E-04
TTBASE5	-1.398	0.038	0.021	-3.37E-06	-4.94E-05	7.38E-04
TTBASE6	-1.412	0.039	0.021	-3.11E-06	-4.89E-05	7.38E-04
TTBASE7	-1.421	-0.105	0.011	-5.49E-06	-4.89E-05	7.41E-04
TTBASE8	-1.421	-0.311	-0.002	-5.78E-06	-4.94E-05	7.40E-04
KINGPIN	-1.405	-0.21	0.004	-3.25E-06	-4.91E-05	7.40E-04

Deflections under Z-Direction Wind

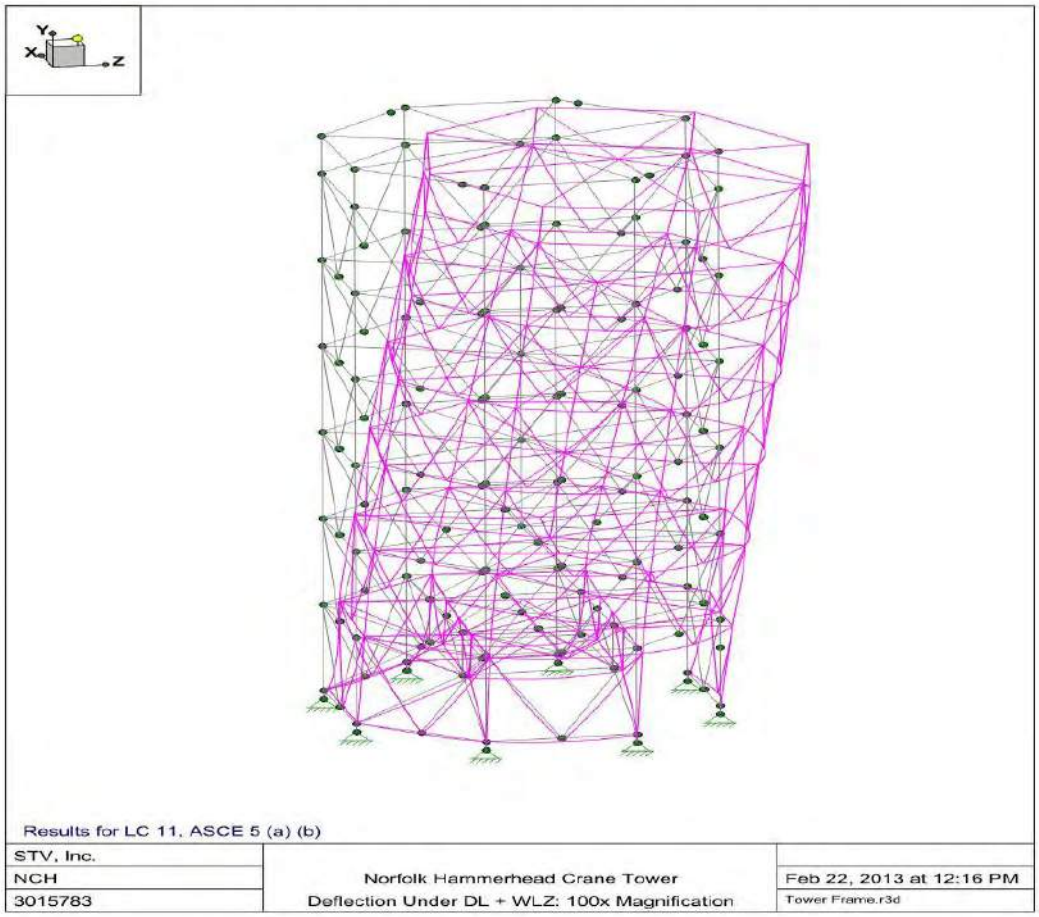

Joint Label	X [in]	Y [in]	Z [in]	X Rotation [rad]	Y Rotation [rad]	Z Rotation [rad]
TTBASE1	-0.715	-0.424	0.975	5.47E-04	-2.04E-03	4.10E-04
TTBASE2	-0.146	-0.271	0.975	5.47E-04	-2.04E-03	4.08E-04
TTBASE3	0.256	-0.083	1.377	5.49E-04	-2.04E-03	4.06E-04
TTBASE4	0.256	0.03	1.946	5.48E-04	-2.04E-03	4.06E-04
TTBASE5	-0.146	0.002	2.348	5.46E-04	-2.04E-03	4.04E-04
TTBASE6	-0.715	-0.15	2.348	5.46E-04	-2.04E-03	4.05E-04
TTBASE7	-1.117	-0.337	1.946	5.44E-04	-2.04E-03	4.08E-04
TTBASE8	-1.117	-0.45	1.377	5.44E-04	-2.04E-03	4.07E-04
KINGPIN	-0.431	-0.21	1.662	5.46E-04	-2.04E-03	4.07E-04

6-1-4
RISA-3D™ Model Code Checks

This section summarizes the Member Design Code Check under Envelope of Load Conditions, meaning each member shows the percentage of allowable stress it has induced under its individual worst case design condition. This percentage can be found in the fourth column Code Check, where a value less than 1.0 implies acceptability. The Slew Ring is evaluated separately in Attachment 6-3.

Company : STV, Inc.
Designer : NCH
Job Number : 3015783
Norfolk Hammerhead Crane Tower
Feb 15, 2013
9:49 AM
Checked By: SLC

Envelope AISC 14th(360-10): ASD Steel Code Checks

	Member	Shape	Code C...	Loc[ft]	LC	Shear ...	Loc[ft]	Dir	LC	Pnc/om [k]	Pnt/om [k]	Mnyy/om ...	Mnzz/om ...	Cb	Eqn
1	M1	W14x342	.434	43.531	11	.033	0	z	29	2400.797	2721.557	758.982	1480.247	1	H1-1a
2	M2	W14x342	.577	2.009	30	.041	0	y	29	2400.797	2721.557	758.982	1480.247	1	H1-1a
3	M3	W14x342	.444	2.009	28	.130	0	y	28	2400.797	2721.557	758.982	1480.247	1	H1-1a
4	M4	W14x342	.399	2.009	29	.124	0	y	28	2400.797	2721.557	758.982	1480.247	1	H1-1a
5	M5	W14x342	.616	2.009	31	.122	0	y	12	2400.797	2721.557	758.982	1480.247	1	H1-1a
6	M6	W14x342	.720	2.009	30	.211	0	y	30	2400.797	2721.557	758.982	1480.247	1	H1-1a
7	M7	14CB328	.285	20.135	11	.003	20.785	y	11	2291.593	2599.491	724.85	1409.387	1	H1-1a
8	M9	W14x342	.625	2.009	13	.168	0	y	13	2400.797	2721.557	758.982	1480.247	1	H1-1a
9	M10	14CB328	.276	20.135	13	.003	20.785	y	13	2291.593	2599.491	724.85	1409.387	1	H1-1a
10	M11	14CB328	.398	20.135	11	.003	20.785	y	11	2291.593	2599.491	724.85	1409.387	1	H1-1a
11	M12	14CB328	.464	0	30	.003	20.785	y	11	2291.593	2599.491	724.85	1409.387	1	H1-1a
12	M13	14CB328	.466	0	31	.003	20.785	y	13	2291.593	2599.491	724.85	1409.387	1	H1-1a
13	M14	14CB328	.401	42.219	13	.003	21.434	y	13	2291.593	2599.491	724.85	1409.387	1	H1-1a
14	M15	14CB328	.394	0	29	.003	20.785	y	13	942.197	2599.491	724.85	1409.387	1	H1-1a
15	M16	14CB328	.084	20.135	28	.003	20.785	y	11	2291.593	2599.491	724.85	1409.387	1	H1-1b
16	M17	W14x342	.722	2.009	13	.242	0	y	13	2400.797	2721.557	758.982	1480.247	1	H1-1a
17	M18	10CB72	.129	49	30	.018	16.333	y	13	241.641	418.329	69.82	135.229	1	H1-1b
18	M19	10CB72	.407	39.083	34	.031	39.667	y	13	241.641	418.329	69.82	135.229	1	H1-1a
19	M20	10CB72	.376	0	12	.006	1.415	z	12	283.032	418.329	69.82	147.71	1....	H1-1a
20	M21	10CB72	.517	0	28	.030	8.49	z	11	283.032	418.329	69.82	147.71	1....	H1-1a
21	M22	10CB72	.344	0	10	.019	8.086	z	13	283.032	418.329	69.82	147.71	2....	H1-1a
22	M23	10CB72	.651	0	30	.008	2.224	z	30	283.032	418.329	69.82	147.71	2....	H1-1a
23	M24	10CB72	.350	0	13	.013	7.277	z	31	379.4	418.329	69.82	147.71	1....	H1-1a
24	M25	10CB72	.783	0	13	.023	7.884	z	13	283.032	418.329	69.82	147.71	1....	H1-1a
25	M26	HP10x42	.300	11.6	12	.047	0	y	12	196.473	245.03	35.092	75.934	1....	H1-1b
26	M27	HP10x42	.182	12.321	12	.024	23.193	y	16	196.499	245.03	35.092	75.581	1....	H1-1b
27	M28	HP10x42	.323	10.392	13	.009	23.2	z	13	196.473	245.03	35.092	78.313	1....	H1-1a
28	M29	HP10x42	.287	9.905	17	.007	23.193	z	13	196.499	245.03	35.092	78.313	1....	H1-1a
29	M30	HP10x42	.487	17.158	11	.007	11.6	z	11	196.473	245.03	35.092	78.313	1....	H1-1a
30	M31	HP10x42	.394	12.567	30	.048	0	y	13	196.473	245.03	35.092	75.294	1....	H1-1a
31	M32	HP10x42	.312	11.597	30	.036	23.193	y	30	196.499	245.03	35.092	76.204	1....	H1-1b
32	M33	HP10x42	.387	10.872	12	.024	0	y	12	196.499	245.03	35.092	76.379	1....	H1-1a
33	M34	HP10x42	.259	9.425	31	.004	0	z	13	196.473	245.03	35.092	78.313	1....	H1-1a
34	M35	HP10x42	.360	17.395	28	.003	11.597	z	30	196.499	245.03	35.092	78.313	1....	H1-1a
35	M36	HP10x42	.404	13.046	15	.024	0	y	17	196.499	245.03	35.092	75.423	1....	H1-1a
36	M37	HP10x42	.259	11.358	12	.047	23.2	y	12	196.473	245.03	35.092	75.713	1....	H1-1b
37	M38	HP10x42	.208	10.63	12	.024	0	y	12	196.499	245.03	35.092	75.756	1....	H1-1b
38	M39	HP10x42	.236	16.917	28	.005	23.2	z	13	196.473	245.03	35.092	78.313	1....	H1-1a
39	M40	HP10x42	.324	17.395	28	.005	23.193	z	29	196.499	245.03	35.092	78.313	1....	H1-1a
40	M41	HP10x42	.365	5.8	13	.004	0	z	28	196.473	245.03	35.092	78.313	1....	H1-1a
41	M42	HP10x42	.405	14.012	11	.024	23.193	y	13	196.499	245.03	35.092	75.308	1....	H1-1a
42	M43	HP10x42	.367	12.567	30	.046	0	y	11	196.473	245.03	35.092	75.566	1....	H1-1a
43	M44	HP10x42	.239	12.08	30	.035	23.193	y	30	196.499	245.03	35.092	75.677	1....	H1-1b
44	M45	HP10x42	.256	11.842	12	.046	0	y	12	196.473	245.03	35.092	75.65	1....	H1-1b
45	M46	HP10x42	.194	10.63	12	.024	0	y	12	196.499	245.03	35.092	75.661	1....	H1-1b
46	M47	HP10x42	.226	16.675	28	.005	0	z	13	196.473	245.03	35.092	78.313	1....	H1-1a
47	M48	HP10x42	.315	7.489	13	.004	0	z	29	196.499	245.03	35.092	78.313	1....	H1-1a
48	M49	HP10x42	.360	5.8	13	.003	23.2	z	10	196.473	245.03	35.092	78.313	1....	H1-1a
49	M50	HP10x42	.392	14.012	11	.024	0	y	13	196.499	245.03	35.092	75.304	1....	H1-1a
50	M51	HP10x42	.296	12.325	11	.046	23.2	y	11	196.473	245.03	35.092	75.592	1....	H1-1b
51	M52	HP10x42	.228	11.113	30	.035	23.193	y	30	196.499	245.03	35.092	75.619	1....	H1-1b
52	M53	HP10x42	.254	12.083	12	.046	0	y	10	196.473	245.03	35.092	75.632	1....	H1-1b
53	M54	HP10x42	.188	12.563	12	.023	23.193	y	10	196.499	245.03	35.092	75.635	1....	H1-1b
54	M55	HP10x42	.227	16.433	28	.004	0	z	13	196.473	245.03	35.092	78.313	1....	H1-1a
55	M56	HP10x42	.297	6.523	31	.003	23.193	z	13	196.499	245.03	35.092	78.313	1....	H1-1a
56	M57	HP10x42	.354	5.8	13	.003	11.6	z	30	196.473	245.03	35.092	78.313	1....	H1-1a

RISA-3D Version 11.0.0 [I:\...\3015783\3015783_0001\60_Discipline Info\Structural\Tower Frame.r3d] Page 1

Envelope AISC 14th(360-10): ASD Steel Code Checks (Continued)

	Member	Shape	Code C...	Loc[ft]	LC	Shear ...	Loc[ft]	Dir	LC	Pnc/om [k]	Pnt/om [k]	Mnyy/om ...	Mnzz/om ...	Cb	Eqn
57	M58	HP10x42	.381	11.597	17	.024	23.193	y	13	196.499	245.03	35.092	76.139	1....	H1-1a
58	M59	HP10x42	.330	10.15	33	.047	23.2	y	13	196.473	245.03	35.092	75.888	1....	H1-1a
59	M60	HP10x42	.227	10.872	30	.035	0	y	29	196.499	245.03	35.092	75.57	1....	H1-1b
60	M61	HP10x42	.250	12.083	12	.046	0	y	10	196.473	245.03	35.092	75.645	1....	H1-1b
61	M62	HP10x42	.184	13.046	10	.023	23.193	y	10	196.499	245.03	35.092	75.732	1....	H1-1b
62	M63	HP10x42	.130	8.217	31	.004	23.2	z	13	196.473	245.03	35.092	78.313	1....	H1-1b
63	M64	HP10x42	.294	6.765	13	.003	23.193	z	13	196.499	245.03	35.092	78.313	1....	H1-1a
64	M65	HP10x42	.349	5.8	13	.003	11.6	z	30	196.473	245.03	35.092	78.313	1....	H1-1a
65	M66	HP10x42	.368	11.597	17	.024	0	y	13	196.499	245.03	35.092	76.129	1....	H1-1a
66	M67	HP10x42	.283	12.567	11	.047	0	y	13	196.473	245.03	35.092	75.555	1....	H1-1b
67	M68	HP10x42	.221	10.872	30	.035	0	y	29	196.499	245.03	35.092	75.594	1....	H1-1b
68	M69	HP10x42	.202	11.6	12	.032	11.6	y	12	196.473	245.03	35.092	78.313	1....	H1-1b
69	M70	HP10x42	.363	9.667	33	.005	11.6	z	13	196.473	245.03	35.092	78.313	1....	H1-1a
70	M71	HP10x42	.338	11.6	11	.032	11.6	y	13	196.473	245.03	35.092	78.313	1....	H1-1a
71	M72	W10x49	.083	11.639	28	.004	23.772	z	30	231.136	284.551	46.602	85.845	1	H1-1b
72	M73	W10x49	.090	11.639	28	.003	0	z	12	231.136	284.551	46.602	85.845	1	H1-1b
73	M74	W10x49	.072	12.133	28	.002	0	z	31	231.143	284.551	46.602	85.847	1	H1-1b
74	M75	W10x49	.072	11.638	31	.004	23.771	z	31	231.143	284.551	46.602	85.847	1	H1-1b
75	M76	W10x49	.359	12.381	28	.003	0	z	30	231.136	284.551	46.602	85.845	1	H1-1a
76	M77	W10x49	.332	11.391	31	.005	23.772	z	11	231.136	284.551	46.602	85.845	1	H1-1a
77	M78	W10x49	.488	12.381	11	.003	0	z	28	231.143	284.551	46.602	85.847	1	H1-1a
78	M79	W10x49	.447	11.39	13	.005	0	z	13	231.143	284.551	46.602	85.847	1	H1-1a
79	M80	W10x49	.712	12.381	11	.004	23.772	z	28	231.136	284.551	46.602	85.845	1	H1-1a
80	M81	W10x49	.687	11.391	13	.003	0	z	29	231.136	284.551	46.602	85.845	1	H1-1a
81	M82	W10x49	.432	12.381	30	.003	0	z	29	231.136	284.551	46.602	85.845	1	H1-1a
82	M83	W10x49	.483	11.391	29	.003	23.772	z	30	231.136	284.551	46.602	85.845	1	H1-1a
83	M84	W10x49	.112	12.134	13	.003	0	z	10	231.136	284.551	46.602	85.845	1	H1-1b
84	M85	W10x49	.113	11.639	11	.003	0	z	13	231.136	284.551	46.602	85.845	1	H1-1b
85	M86	W10x49	.126	12.133	10	.003	23.771	z	13	231.143	284.551	46.602	85.847	1	H1-1b
86	M87	W10x49	.130	11.638	12	.003	0	z	29	231.143	284.551	46.602	85.847	1	H1-1b
87	M88	W10x49	.349	12.381	28	.003	23.772	z	28	231.136	284.551	46.602	85.845	1	H1-1a
88	M89	W10x49	.346	11.391	31	.003	23.772	z	31	231.136	284.551	46.602	85.845	1	H1-1a
89	M90	W10x49	.531	12.381	28	.003	0	z	30	231.143	284.551	46.602	85.847	1	H1-1a
90	M91	W10x49	.530	11.39	31	.002	0	z	13	231.143	284.551	46.602	85.847	1	H1-1a
91	M92	W10x49	.597	12.381	11	.003	23.772	z	31	231.136	284.551	46.602	85.845	1	H1-1a
92	M93	W10x49	.597	11.391	13	.003	0	z	13	231.136	284.551	46.602	85.845	1	H1-1a
93	M94	W10x49	.523	12.381	30	.002	0	z	30	231.143	284.551	46.602	85.847	1	H1-1a
94	M95	W10x49	.524	11.39	29	.003	23.771	z	31	231.143	284.551	46.602	85.847	1	H1-1a
95	M96	W10x49	.369	12.381	30	.003	0	z	28	231.136	284.551	46.602	85.845	1	H1-1a
96	M97	W10x49	.367	11.391	29	.003	0	z	13	231.136	284.551	46.602	85.845	1	H1-1a
97	M98	W10x49	.126	12.133	12	.003	23.771	z	28	231.143	284.551	46.602	85.847	1	H1-1b
98	M99	W10x49	.125	11.638	10	.003	0	z	11	231.143	284.551	46.602	85.847	1	H1-1b
99	M100	W10x49	.113	12.134	13	.004	23.772	z	30	231.136	284.551	46.602	85.845	1	H1-1b
100	M101	W10x49	.112	11.639	11	.004	23.772	z	31	231.136	284.551	46.602	85.845	1	H1-1b
101	M102	W10x49	.121	12.133	10	.003	0	z	30	231.143	284.551	46.602	85.847	1	H1-1b
102	M103	W10x49	.125	11.638	12	.004	0	z	13	231.143	284.551	46.602	85.847	1	H1-1b
103	M104	W10x49	.379	12.381	28	.003	23.772	z	11	231.136	284.551	46.602	85.845	1	H1-1a
104	M105	W10x49	.383	11.391	31	.003	0	z	13	231.136	284.551	46.602	85.845	1	H1-1a
105	M106	W10x49	.525	12.381	28	.003	23.771	z	28	231.143	284.551	46.602	85.847	1	H1-1a
106	M107	W10x49	.523	11.39	31	.004	0	z	29	231.143	284.551	46.602	85.847	1	H1-1a
107	M108	W10x49	.614	12.381	11	.004	23.772	z	28	231.136	284.551	46.602	85.845	1	H1-1a
108	M109	W10x49	.614	11.391	13	.004	23.772	z	29	231.136	284.551	46.602	85.845	1	H1-1a
109	M110	W10x49	.539	12.381	30	.004	23.771	z	28	231.143	284.551	46.602	85.847	1	H1-1a
110	M111	W10x49	.542	11.39	29	.003	23.771	z	29	231.143	284.551	46.602	85.847	1	H1-1a
111	M112	W10x49	.373	12.381	30	.003	0	z	11	231.136	284.551	46.602	85.845	1	H1-1a
112	M113	W10x49	.368	11.391	29	.003	0	z	13	231.136	284.551	46.602	85.845	1	H1-1a
113	M114	W10x49	.127	12.133	12	.004	23.771	z	11	231.143	284.551	46.602	85.847	1	H1-1b

Envelope AISC 14th(360-10): ASD Steel Code Checks (Continued)

	Member	Shape	Code C...	Loc[ft]	LC	Shear ...	Loc[ft]	Dir	LC	Pnc/om [k]	Pnt/om [k]	Mnyy/om ...	Mnzz/om ...	Cb	Eqn
114	M115	W10x49	.124	11.638	10	.003	0	z	12	231.143	284.551	46.602	85.847	1	H1-1b
115	M116	W10x49	.110	12.134	13	.004	23.772	z	31	231.136	284.551	46.602	85.845	1	H1-1b
116	M117	W10x49	.110	11.639	11	.004	0	z	30	231.136	284.551	46.602	85.845	1	H1-1b
117	M118	W10x49	.116	12.133	10	.004	0	z	31	231.143	284.551	46.602	85.847	1	H1-1b
118	M119	W10x49	.118	11.638	12	.003	23.771	z	12	231.143	284.551	46.602	85.847	1	H1-1b
119	M120	W10x49	.366	12.381	28	.004	23.772	z	13	231.136	284.551	46.602	85.845	1	H1-1a
120	M121	W10x49	.376	11.391	31	.003	0	z	13	231.136	284.551	46.602	85.845	1	H1-1a
121	M122	W10x49	.507	12.381	28	.004	0	z	29	231.143	284.551	46.602	85.847	1	H1-1a
122	M123	W10x49	.517	11.39	31	.003	0	z	29	231.143	284.551	46.602	85.847	1	H1-1a
123	M124	W10x49	.613	12.381	11	.003	0	z	29	231.136	284.551	46.602	85.845	1	H1-1a
124	M125	W10x49	.613	11.391	13	.003	23.772	z	28	231.136	284.551	46.602	85.845	1	H1-1a
125	M126	W10x49	.530	12.381	30	.003	0	z	28	231.143	284.551	46.602	85.847	1	H1-1a
126	M127	W10x49	.521	11.39	29	.004	0	z	28	231.143	284.551	46.602	85.847	1	H1-1a
127	M128	W10x49	.367	12.381	30	.003	23.772	z	11	231.136	284.551	46.602	85.845	1	H1-1a
128	M129	W10x49	.356	11.391	29	.004	23.772	z	11	231.136	284.551	46.602	85.845	1	H1-1a
129	M130	W10x49	.119	12.133	12	.003	0	z	30	231.143	284.551	46.602	85.847	1	H1-1b
130	M131	W10x49	.118	11.638	10	.004	23.771	z	30	231.143	284.551	46.602	85.847	1	H1-1b
131	M132	W10x49	.103	12.134	13	.003	23.772	z	13	231.136	284.551	46.602	85.845	1	H1-1b
132	M133	W10x49	.103	11.639	11	.003	0	z	11	231.136	284.551	46.602	85.845	1	H1-1b
133	M134	W10x49	.112	12.133	10	.003	0	z	13	231.143	284.551	46.602	85.847	1	H1-1b
134	M135	W10x49	.113	11.638	12	.003	0	z	11	231.143	284.551	46.602	85.847	1	H1-1b
135	M136	W10x49	.355	12.381	28	.003	23.772	z	13	231.136	284.551	46.602	85.845	1	H1-1a
136	M137	W10x49	.364	11.391	31	.002	0	z	11	231.136	284.551	46.602	85.845	1	H1-1a
137	M138	W10x49	.494	12.381	11	.003	23.771	z	11	231.143	284.551	46.602	85.847	1	H1-1a
138	M139	W10x49	.503	11.39	13	.002	0	z	13	231.143	284.551	46.602	85.847	1	H1-1a
139	M140	W10x49	.601	12.381	11	.003	0	z	11	231.136	284.551	46.602	85.845	1	H1-1a
140	M141	W10x49	.602	11.391	13	.003	0	z	13	231.136	284.551	46.602	85.845	1	H1-1a
141	M142	W10x49	.509	12.381	11	.003	0	z	11	231.143	284.551	46.602	85.847	1	H1-1a
142	M143	W10x49	.500	11.39	13	.003	0	z	13	231.143	284.551	46.602	85.847	1	H1-1a
143	M144	W10x49	.359	12.381	30	.002	0	z	13	231.136	284.551	46.602	85.845	1	H1-1a
144	M145	W10x49	.351	11.391	29	.002	0	z	11	231.136	284.551	46.602	85.845	1	H1-1a
145	M146	W10x49	.113	12.133	12	.003	0	z	13	231.143	284.551	46.602	85.847	1	H1-1b
146	M147	W10x49	.113	11.638	10	.003	23.771	z	11	231.143	284.551	46.602	85.847	1	H1-1b
147	M148	W10x49	.098	12.18	13	.003	0	z	29	230.768	284.551	46.602	85.748	1	H1-1b
148	M149	W10x49	.098	11.683	11	.003	23.863	z	28	230.768	284.551	46.602	85.748	1	H1-1b
149	M150	W10x49	.108	12.179	10	.002	23.862	z	29	230.774	284.551	46.602	85.749	1	H1-1b
150	M151	W10x49	.107	11.682	12	.003	0	z	11	230.774	284.551	46.602	85.749	1	H1-1b
151	M152	W10x49	.348	12.429	28	.002	0	z	13	230.768	284.551	46.602	85.748	1	H1-1a
152	M153	W10x49	.355	11.435	31	.003	23.863	z	11	230.768	284.551	46.602	85.748	1	H1-1a
153	M154	W10x49	.489	12.428	11	.002	23.862	z	28	230.774	284.551	46.602	85.749	1	H1-1a
154	M155	W10x49	.501	11.434	13	.003	0	z	13	230.774	284.551	46.602	85.749	1	H1-1a
155	M156	W10x49	.595	12.429	11	.003	0	z	28	230.768	284.551	46.602	85.748	1	H1-1a
156	M157	W10x49	.596	11.435	13	.003	0	z	29	230.768	284.551	46.602	85.748	1	H1-1a
157	M158	W10x49	.497	12.428	11	.003	23.862	z	11	230.774	284.551	46.602	85.749	1	H1-1a
158	M159	W10x49	.486	11.434	13	.002	0	z	29	230.774	284.551	46.602	85.749	1	H1-1a
159	M160	W10x49	.354	12.429	30	.003	23.863	z	13	230.768	284.551	46.602	85.748	1	H1-1a
160	M161	W10x49	.348	11.435	29	.002	0	z	11	230.768	284.551	46.602	85.748	1	H1-1a
161	M162	W10x49	.107	12.179	12	.003	23.862	z	13	230.774	284.551	46.602	85.749	1	H1-1b
162	M163	W10x49	.108	11.682	10	.002	23.862	z	28	230.774	284.551	46.602	85.749	1	H1-1b
163	M164	W10x60	.154	23.2	29	.005	23.2	z	29	197.658	349.76	57.635	122.844	2...	H1-1b
164	M165	W10x60	.263	0	11	.005	21.75	z	29	197.658	349.76	57.635	118.882	1...	H1-1a
165	M166	HP10x42	.352	11.6	13	.005	23.2	z	30	128.32	245.03	35.092	66.597	1	H1-1a
166	M167	HP10x42	.436	11.6	13	.005	23.2	z	29	128.32	245.03	35.092	66.597	1	H1-1a
167	M168	HP10x42	.148	19.406	29	.005	19.406	z	31	155.833	245.03	35.092	78.313	2...	H1-1b
168	M169	HP10x42	.450	0	13	.008	9.703	y	11	155.833	245.03	35.092	78.313	2...	H1-1a
169	M170	HP10x42	.218	19.406	29	.006	19.406	z	30	155.833	245.03	35.092	78.313	1...	H1-1a
170	M171	HP10x42	.151	0	13	.006	0	z	29	155.833	245.03	35.092	72.625	1...	H1-1b

Envelope AISC 14th(360-10): ASD Steel Code Checks (Continued)

	Member	Shape	Code C...	Loc[ft]	LC	Shear ...	Loc[ft]	Dir	LC	Pnc/om [k]	Pnt/om [k]	Mnyy/om ...	Mnzz/om ...	Cb	Eqn
171	M172	HP10x42	.099	19.406	12	.004	9.703	y	31	155.833	245.03	35.092	78.313	1....	H1-1b
172	M173	HP10x42	.276	0	11	.007	9.703	y	28	155.833	245.03	35.092	78.313	2....	H1-1a
173	M174	HP10x42	.295	15.563	12	.004	15.563	z	30	183.15	245.03	35.092	78.313	1....	H1-1a
174	M175	HP10x42	.134	0	10	.004	.162	z	28	183.15	245.03	35.092	78.313	1....	H1-1b
175	M176	HP10x42	.534	15.563	30	.005	15.563	z	30	183.15	245.03	35.092	78.313	1....	H1-1a
176	M177	HP10x42	.442	0	29	.006	7.781	y	11	183.15	245.03	35.092	78.313	1....	H1-1a
177	M178	W10x60	.393	11.6	13	.012	11.6	y	13	197.658	349.76	57.635	122.844	1....	H1-1a
178	M179	W10x60	.110	11.842	13	.011	11.6	y	13	197.658	349.76	57.635	122.844	1....	H1-1b
179	M180	HP10x42	.302	7.619	13	.003	0	z	29	183.15	245.03	35.092	74.35	1	H1-1a
180	M181	HP10x42	.226	7.944	15	.003	15.563	z	30	183.15	245.03	35.092	74.35	1	H1-1a
181	M182	HP10x42	.385	7.619	13	.003	0	z	11	183.15	245.03	35.092	74.35	1	H1-1a
182	M183	HP10x42	.349	7.944	11	.003	15.563	z	29	183.15	245.03	35.092	74.35	1	H1-1a
183	M184	MC10x22	.021	0	31	.000	0	z	13	59.974	127.455	7.237	32.832	1	H1-1b
184	M185A	MC10x22	.021	0	31	.000	0	z	13	59.974	127.455	7.237	32.832	1	H1-1b
185	M185	MC10x22	.019	0	29	.001	0	z	11	59.974	127.455	7.237	32.832	1	H1-1b
186	M187A	MC10x22	.019	0	29	.001	0	z	11	59.974	127.455	7.237	32.832	1	H1-1b
187	M186	MC10x22	.024	0	12	.000	0	z	29	59.974	127.455	7.237	32.832	1	H1-1b
188	M189A	MC10x22	.024	0	12	.000	0	z	29	59.974	127.455	7.237	32.832	1	H1-1b
189	M187	MC10x22	.033	0	29	.001	0	y	11	59.974	127.455	7.237	32.832	1	H1-1b
190	M191A	MC10x22	.033	0	29	.001	0	y	11	59.974	127.455	7.237	32.832	1	H1-1b
191	M188	W10x60	.107	16.4	31	.016	16.4	y	12	262.976	349.76	57.635	122.844	2....	H1-1b
192	M189	W10x60	.084	16.4	29	.016	16.4	y	29	262.976	349.76	57.635	122.844	2....	H1-1b
193	M190	W10x60	.125	16.4	11	.022	0	y	31	262.976	349.76	57.635	122.844	1....	H1-1b
194	M191	W10x60	.255	16.4	17	.037	16.4	y	11	262.976	349.76	57.635	122.844	1....	H1-1b
195	M192	W10x33	.423	0	13	.014	0	y	29	91.187	191.874	23.054	63.892	3....	H1-1a
196	M193	W10x33	.364	18.205	15	.019	20.088	y	29	91.187	191.874	23.054	61.502	1....	H1-1a
197	M194	W10x33	.145	0	13	.016	0	y	31	91.187	191.874	23.054	63.892	2....	H1-1b
198	M195	W10x33	.158	20.088	30	.018	20.088	y	12	91.187	191.874	23.054	63.892	2....	H1-1b
199	M196	W10x33	.266	0	12	.017	0	y	30	91.187	191.874	23.054	63.892	2....	H1-1a
200	M197	W10x33	.136	20.088	10	.015	20.088	y	28	91.187	191.874	23.054	63.892	2....	H1-1b
201	M198	W36x231	.159	0	13	.046	0	y	13	312.875	1347.665	289.82	1532.195	1....	H1-1b
202	M199	W36x231	.142	0	13	.040	0	y	13	312.875	1347.665	289.82	1236.088	1....	H1-1b
203	M200	33CB125	.181	11.6	28	.050	23.2	y	31	399.595	726.198	98.308	726.362	1....	H1-1b
204	M201	W10x33	.150	32.81	30	.022	32.81	y	30	119.687	191.874	23.054	55.761	1	H1-1b
205	M202	W10x33	.091	0	29	.016	0	y	13	116.827	191.874	23.054	63.892	2....	H1-1b
206	M203	W10x33	.149	16.405	29	.022	16.405	y	29	116.827	191.874	23.054	63.892	2....	H1-1b
207	M204	W10x33	.179	0	30	.029	0	y	30	91.187	191.874	23.054	63.892	2....	H1-1b
208	M205	W10x33	.165	20.088	31	.028	20.088	y	31	91.187	191.874	23.054	63.892	2....	H1-1b
209	M206	W10x33	.162	0	29	.027	0	y	29	91.187	191.874	23.054	63.892	2....	H1-1b
210	M207	W10x33	.186	20.088	28	.028	20.088	y	28	91.187	191.874	23.054	63.892	2....	H1-1b
211	M208	HP12x53	.106	0	29	.019	0	y	29	140.538	306.287	49.086	115.656	2....	H1-1b
212	M209	HP12x53	.124	30.308	31	.020	30.308	y	31	140.538	306.287	49.086	115.656	2....	H1-1b
213	M210	HP12x53	.060	13.891	10	.013	30.308	y	13	142.768	306.287	49.086	95.568	1	H1-1b
214	M211	HP12x53	.139	0	31	.019	0	y	31	142.768	306.287	49.086	95.568	1	H1-1b
215	M212	HP12x53	.114	0	31	.016	0	y	31	142.768	306.287	49.086	95.568	1	H1-1b
216	M213	HP12x53	.058	13.575	31	.013	30.308	y	31	140.538	306.287	49.086	112.736	1....	H1-1b
217	M214	HP12x53	.126	0	11	.019	0	y	11	140.538	306.287	49.086	115.656	2....	H1-1b
218	M215	HP12x53	.106	0	11	.017	0	y	11	140.538	306.287	49.086	115.656	3....	H1-1b
219	M216	HP12x53	.050	13.575	10	.013	30.308	y	13	140.538	306.287	49.086	112.555	1....	H1-1b
220	M217	HP12x53	.116	0	30	.019	0	y	30	140.538	306.287	49.086	115.656	3....	H1-1b
221	M218	HP12x53	.096	0	30	.017	0	y	30	140.538	306.287	49.086	115.656	3....	H1-1b
222	M219	HP12x53	.050	13.575	28	.013	30.308	y	13	140.538	306.287	49.086	112.356	1....	H1-1b
223	M220	HP12x53	.112	0	29	.018	0	y	29	140.538	306.287	49.086	115.656	2....	H1-1b
224	M221	HP12x53	.093	0	29	.016	0	y	29	140.538	306.287	49.086	115.656	3....	H1-1b
225	M222	HP12x53	.051	13.575	13	.013	30.308	y	13	140.538	306.287	49.086	113.146	1....	H1-1b
226	M223	HP12x53	.125	0	11	.019	0	y	11	140.538	306.287	49.086	115.656	2....	H1-1b
227	M224	HP12x53	.103	0	11	.017	0	y	11	140.538	306.287	49.086	115.656	3....	H1-1b

Envelope AISC 14th(360-10): ASD Steel Code Checks (Continued)

	Member	Shape	Code C...	Loc[ft]	LC	Shear ...	Loc[ft]	Dir	LC	Pnc/om [k]	Pnt/om [k]	Mnyy/om ...	Mnzz/om ...	Cb	Eqn
228	M225	HP10x42	.020	20.75	13	.000	0	z	13	146.048	245.03	35.092	69.084	1	H1-1b
229	M226	HP10x42	.036	20.75	13	.000	0	z	13	146.048	245.03	35.092	69.084	1	H1-1b
230	M227	HP10x42	.063	20.75	13	.000	0	z	13	146.048	245.03	35.092	69.084	1	H1-1b
231	M228	HP12x53	.126	0	30	.021	0	y	30	140.538	306.287	49.086	115.656	2....	H1-1b
232	M229	HP12x53	.105	30.308	28	.019	30.308	y	28	140.538	306.287	49.086	115.656	2....	H1-1b
233	M230	HP12x53	.056	13.575	13	.013	30.308	y	13	140.538	306.287	49.086	112.918	1....	H1-1b
234	M231	HP12x53	.124	0	13	.019	0	y	13	140.538	306.287	49.086	115.656	2....	H1-1b
235	M232	HP12x53	.104	0	13	.017	0	y	13	140.538	306.287	49.086	115.656	3....	H1-1b
236	M233	HP12x53	.055	13.575	31	.013	30.308	y	13	140.538	306.287	49.086	112.725	1....	H1-1b
237	M234	HP12x53	.126	0	13	.019	0	y	13	140.538	306.287	49.086	115.656	2....	H1-1b
238	M235	HP12x53	.107	0	13	.017	0	y	13	140.538	306.287	49.086	115.656	3....	H1-1b

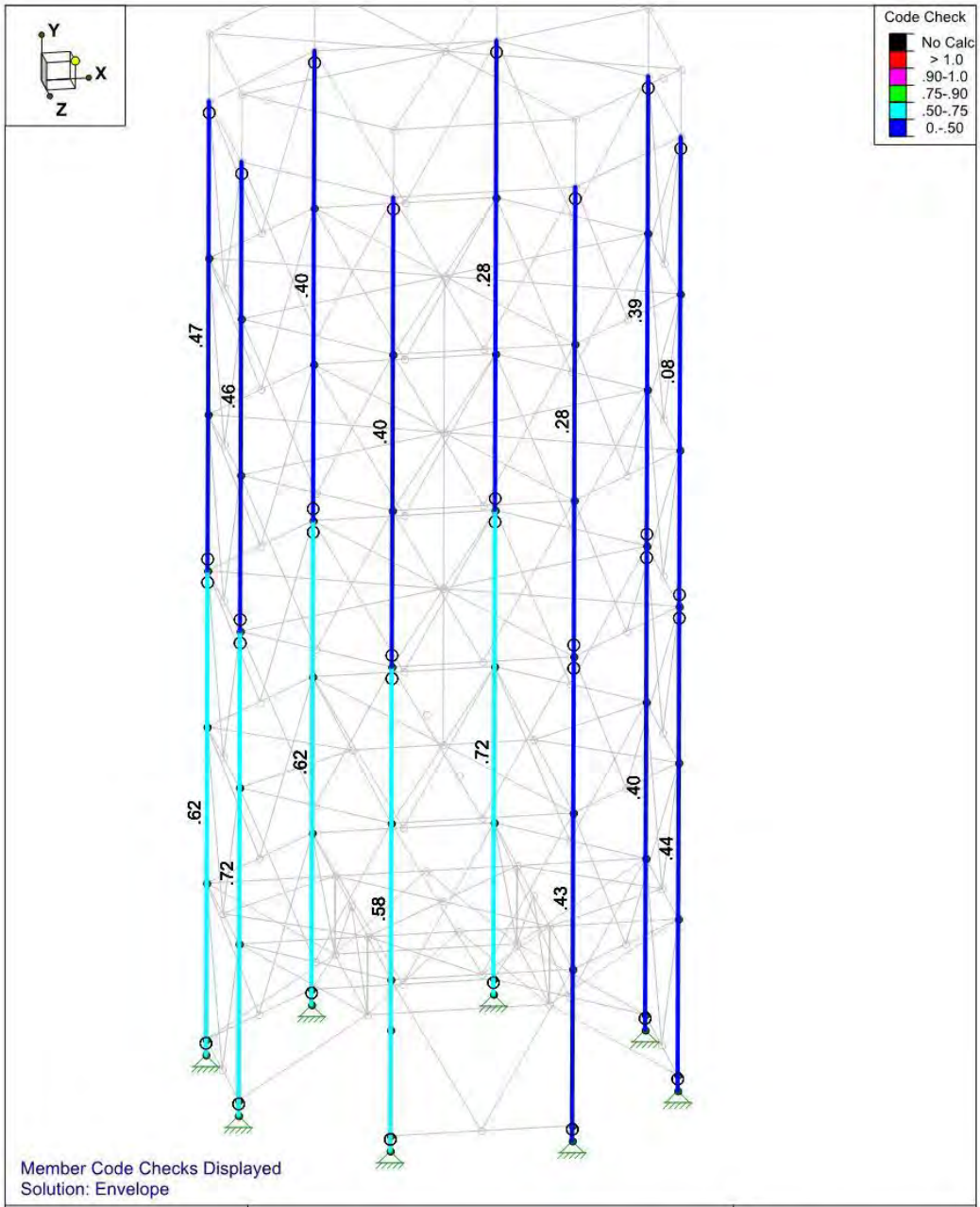

STV, Inc.		9
NCH	Norfolk Hammerhead Crane Tower	May 13, 2013 at 9:47 AM
3015783	Code Check - Columns	untitled.r3d

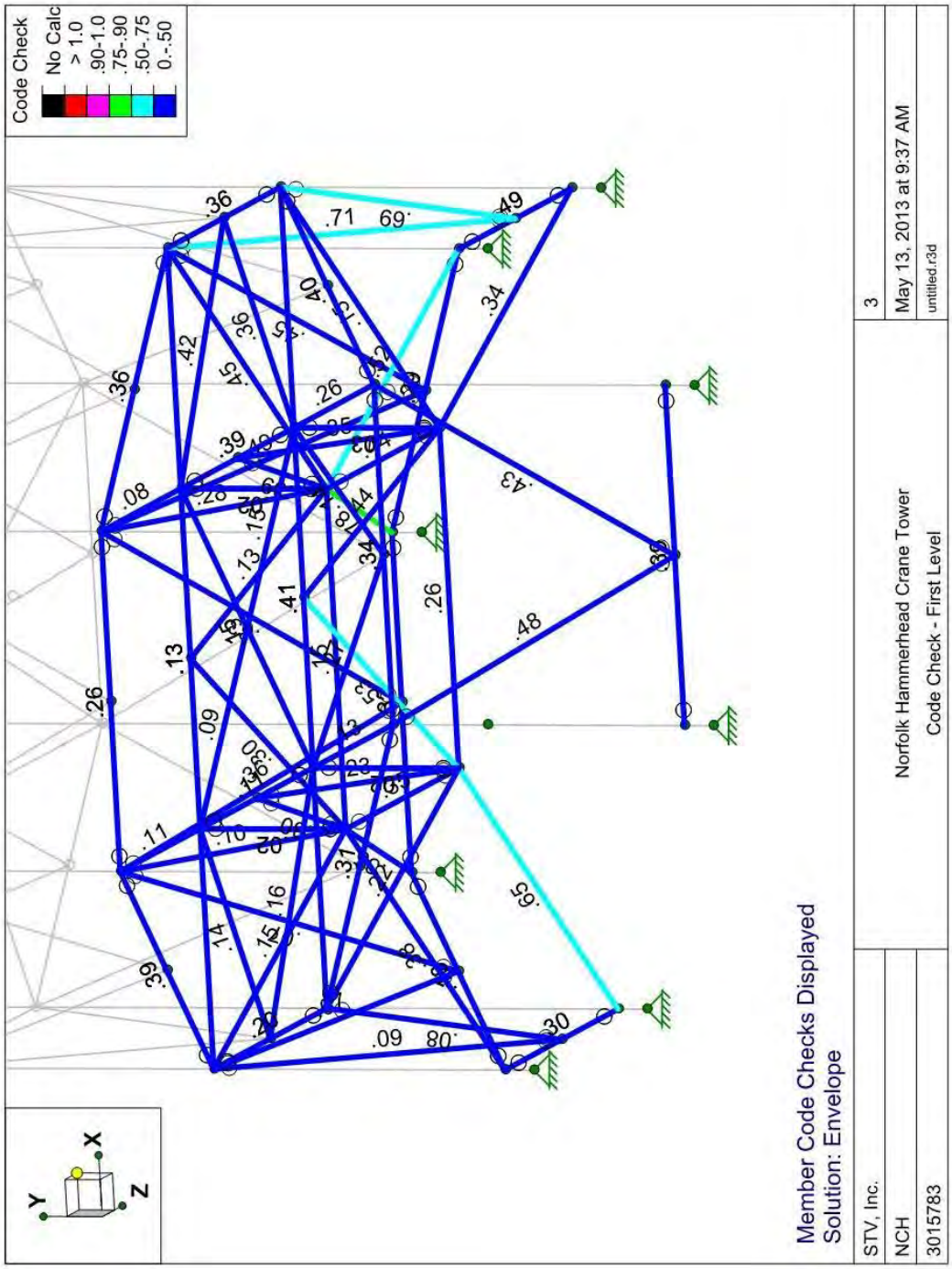
Code Check
No Calc
> 1.0
.90-1.0
.75-.90
.50-.75
0.-.50
Member Code Checks Displayed
Solution: Envelope
STV, Inc.
NCH
3015783
Norfolk Hammerhead Crane Tower
Code Check - First Level
3
May 13, 2013 at 9:37 AM
untitled.r3d

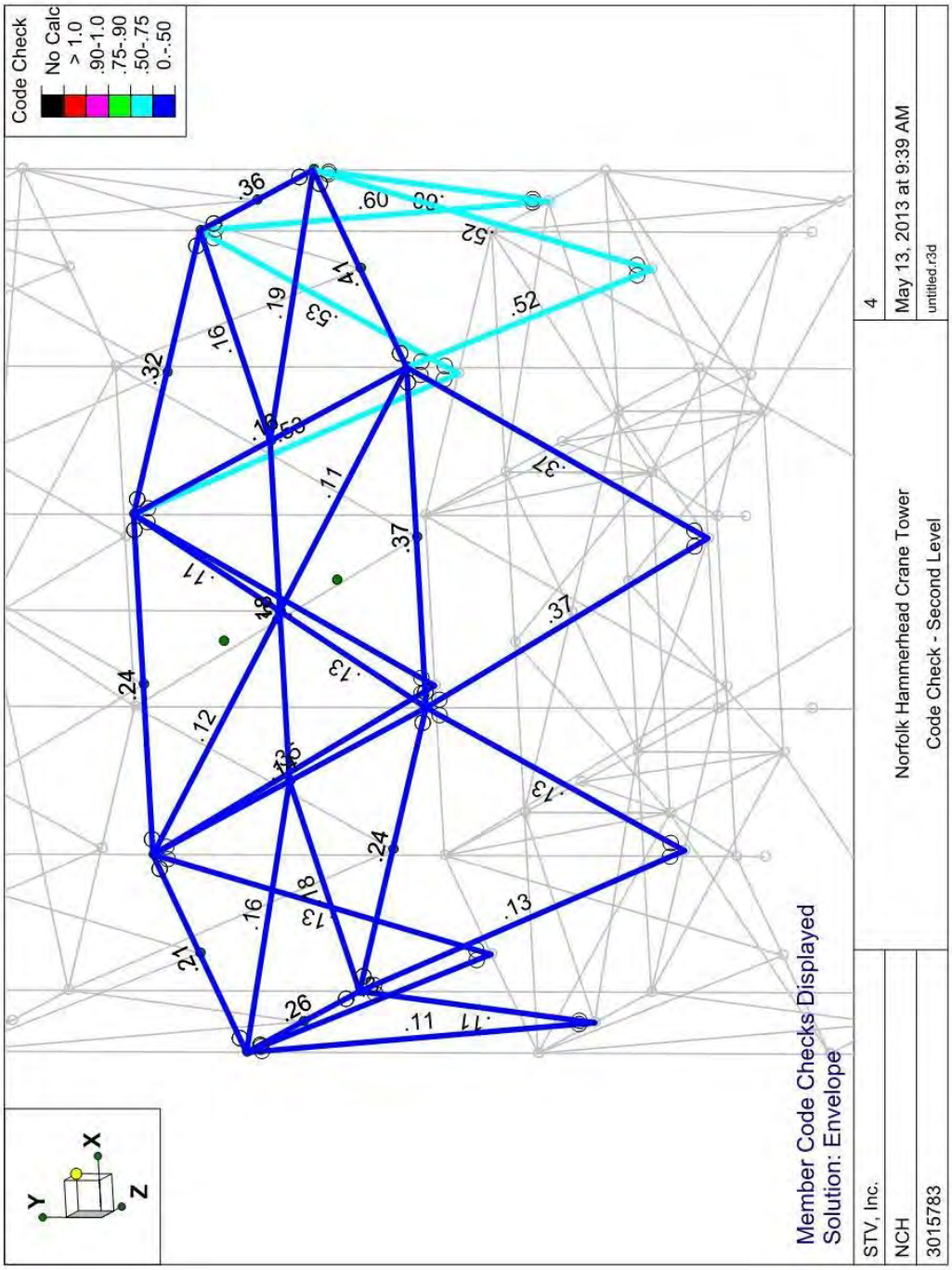
Code Check
No Calc
> 1.0
.90-1.0
.75-.90
.50-.75
0.-.50
Member Code Checks Displayed
Solution: Envelope
STV, Inc.
NCH
3015783
Norfolk Hammerhead Crane Tower
Code Check - Second Level
4
May 13, 2013 at 9:39 AM
untitled.r3d

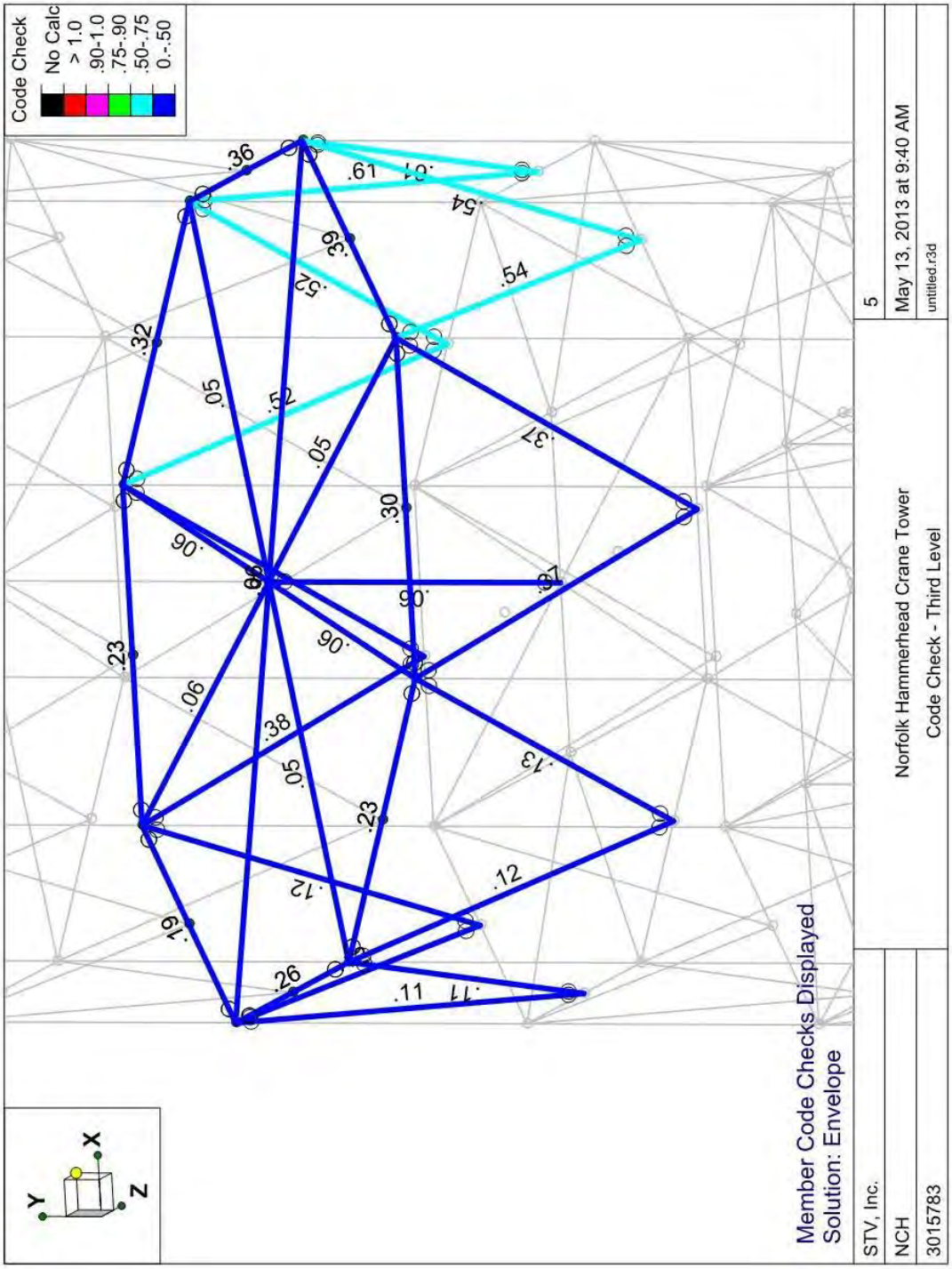
Code Check
No Calc
> 1.0
.90-1.0
.75-.90
.50-.75
0.-.50
Member Code Checks Displayed
Solution: Envelope
STV, Inc.
NCH
3015783
Norfolk Hammerhead Crane Tower
Code Check - Third Level
5
May 13, 2013 at 9:40 AM
untitled.r3d
X
Y
Z

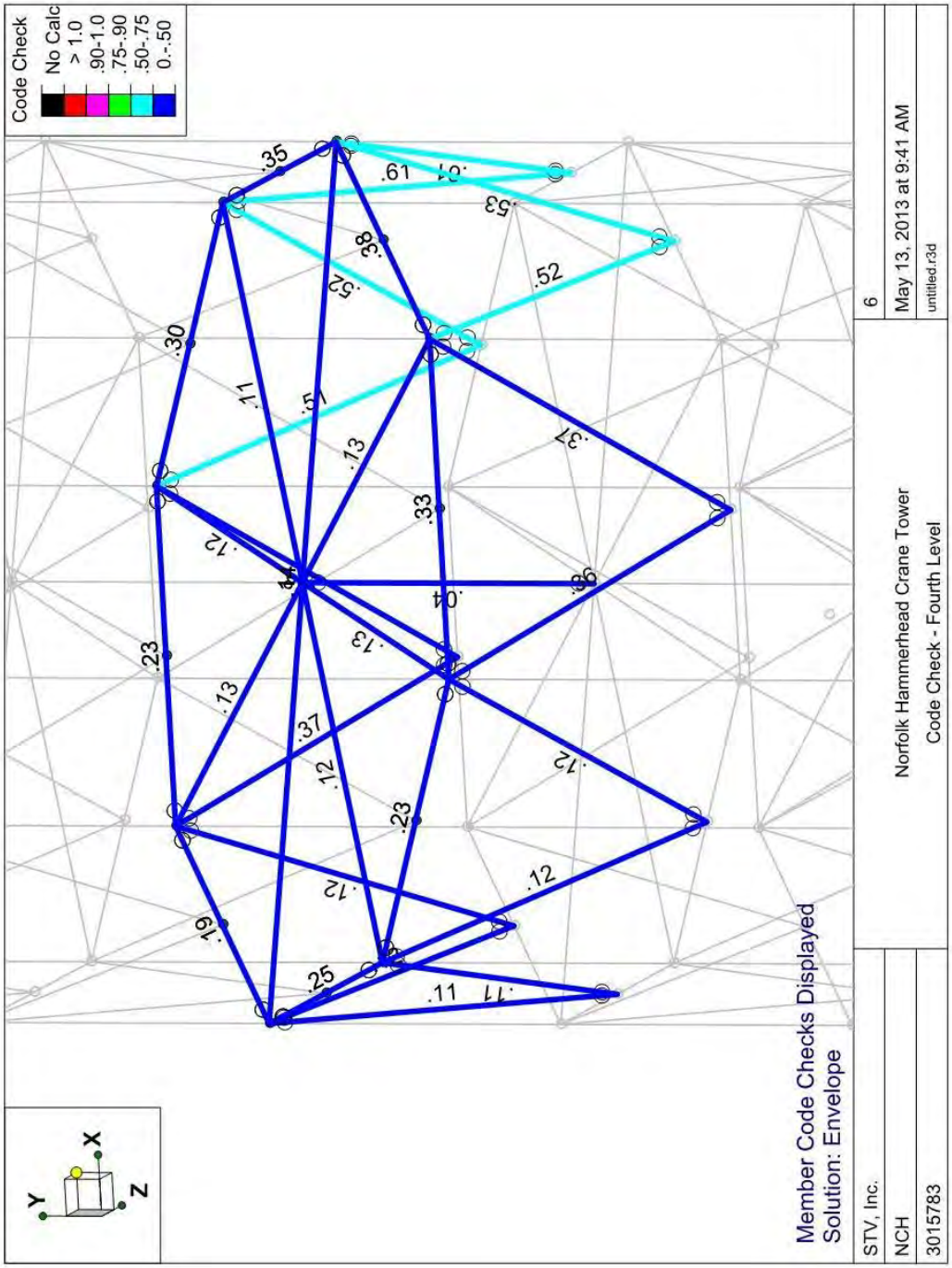
Code Check
No Calc
> 1.0
.90-1.0
.75-.90
.50-.75
0.-.50
Member Code Checks Displayed
Solution: Envelope
STV, Inc.
NCH
3015783
Norfolk Hammerhead Crane Tower
Code Check - Fourth Level
6
May 13, 2013 at 9:41 AM
untitled.r3d

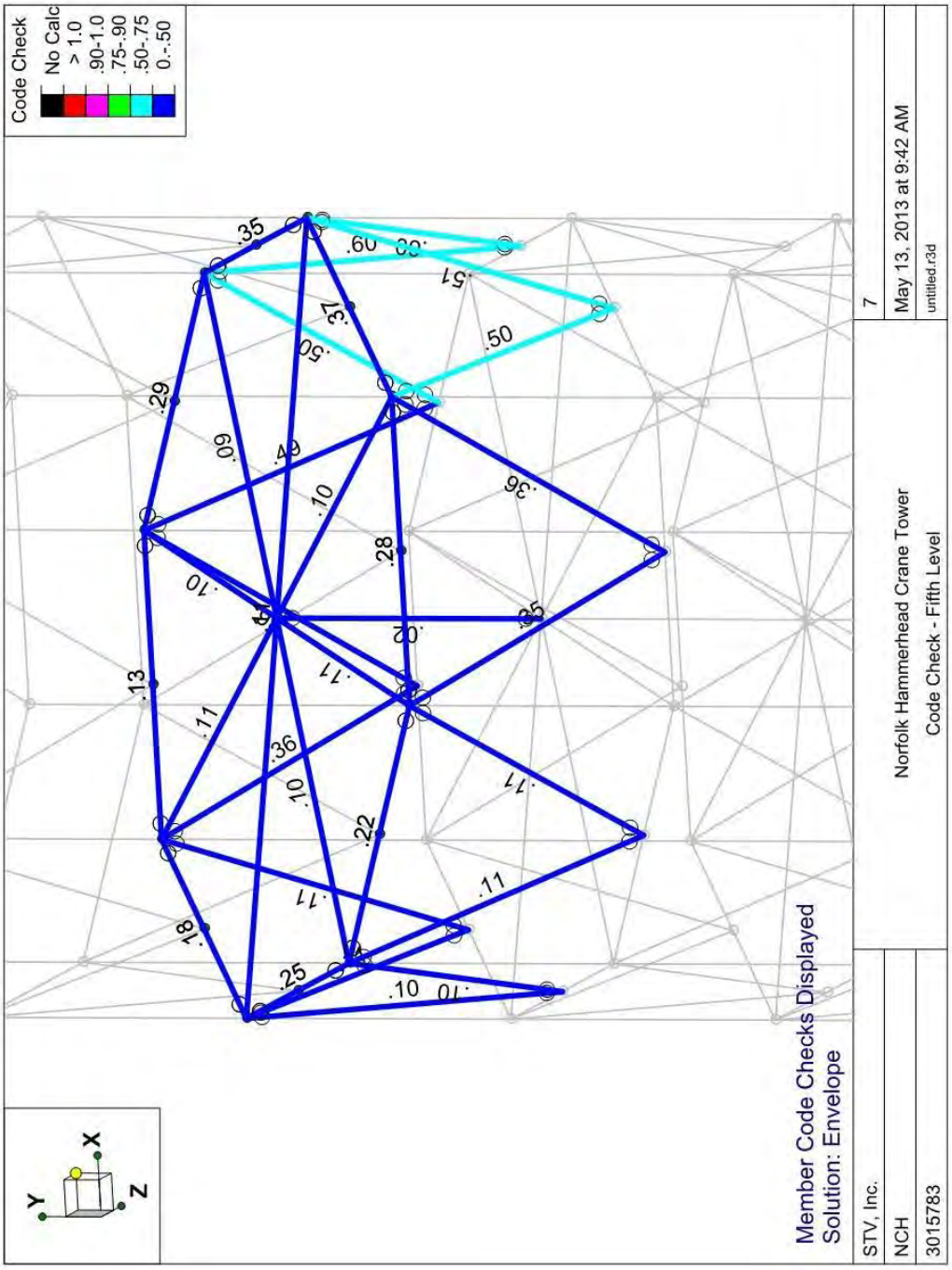
Code Check
No Calc
> 1.0
.90-1.0
.75-.90
.50-.75
0.-.50
Member Code Checks Displayed
Solution: Envelope
STV, Inc.
NCH
3015783
Norfolk Hammerhead Crane Tower
Code Check - Fifth Level
7
May 13, 2013 at 9:42 AM
untitled.r3d
X
Y
Z

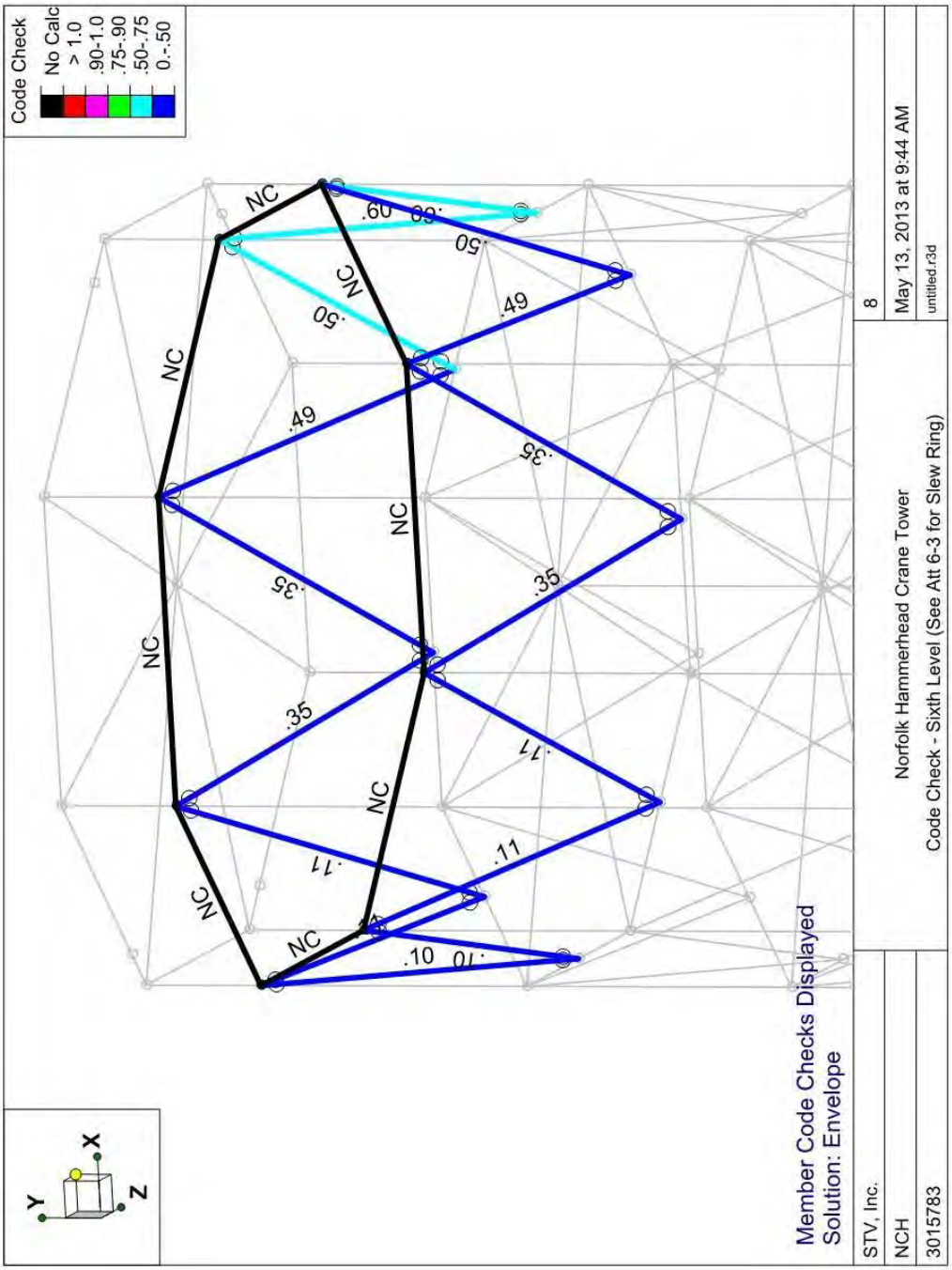
Code Check
No Calc
> 1.0
.90-1.0
.75-.90
.50-.75
0.-.50
NC
.60
.60
.50
.50
.49
.49
.35
.35
.35
.35
.11
.11
.11
.10
.10
Member Code Checks Displayed
Solution: Envelope
STV, Inc.
NCH
3015783
Norfolk Hammerhead Crane Tower
Code Check - Sixth Level (See Att 6-3 for Slew Ring)
8
May 13, 2013 at 9:44 AM
untitled.r3d
Y
X
Z

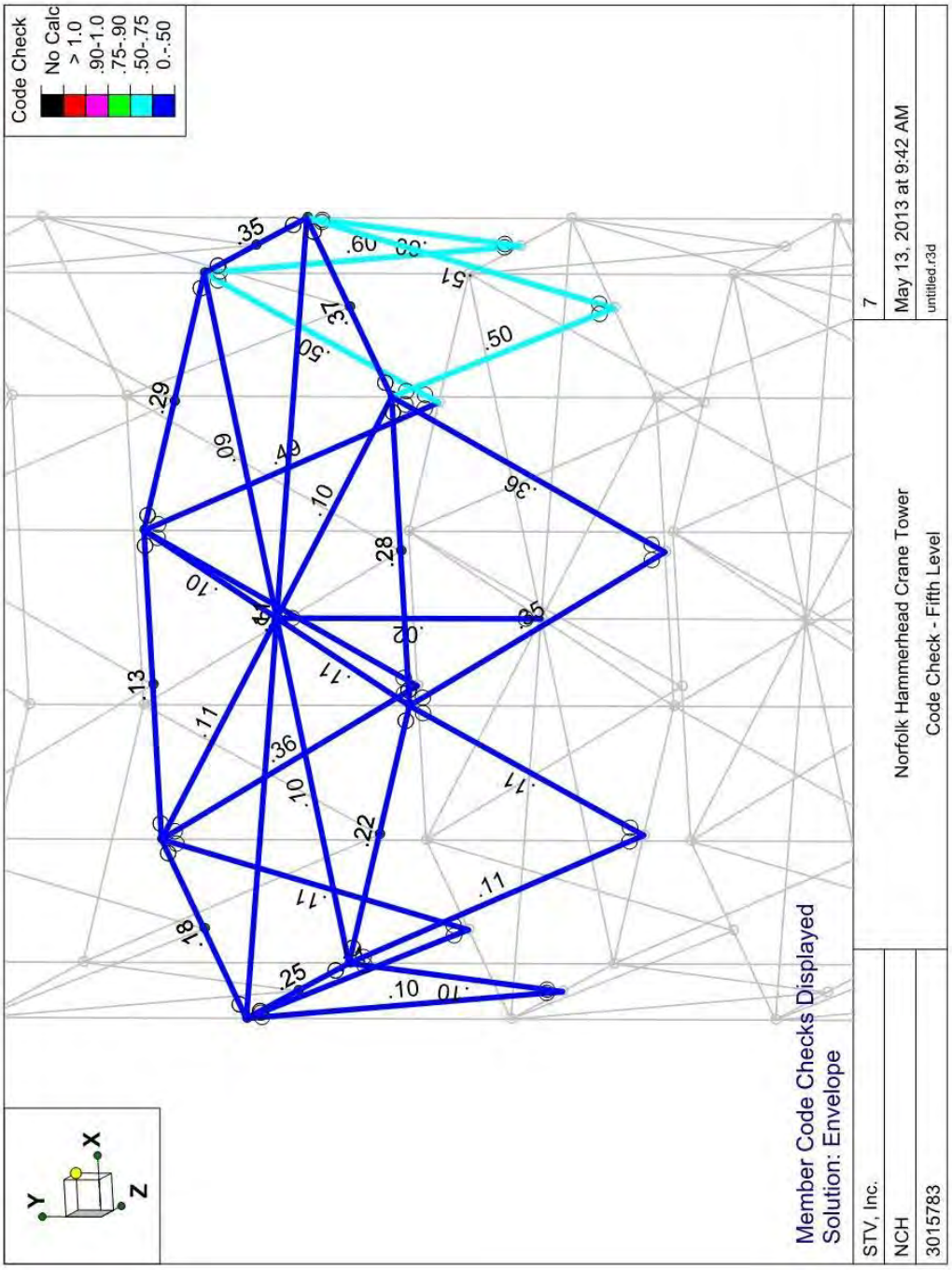
Code Check
No Calc
> 1.0
.90-1.0
.75-.90
.50-.75
0.-.50
Member Code Checks Displayed
Solution: Envelope
STV, Inc.
NCH
3015783
Norfolk Hammerhead Crane Tower
Code Check - Fifth Level
7
May 13, 2013 at 9:42 AM
untitled.r3d

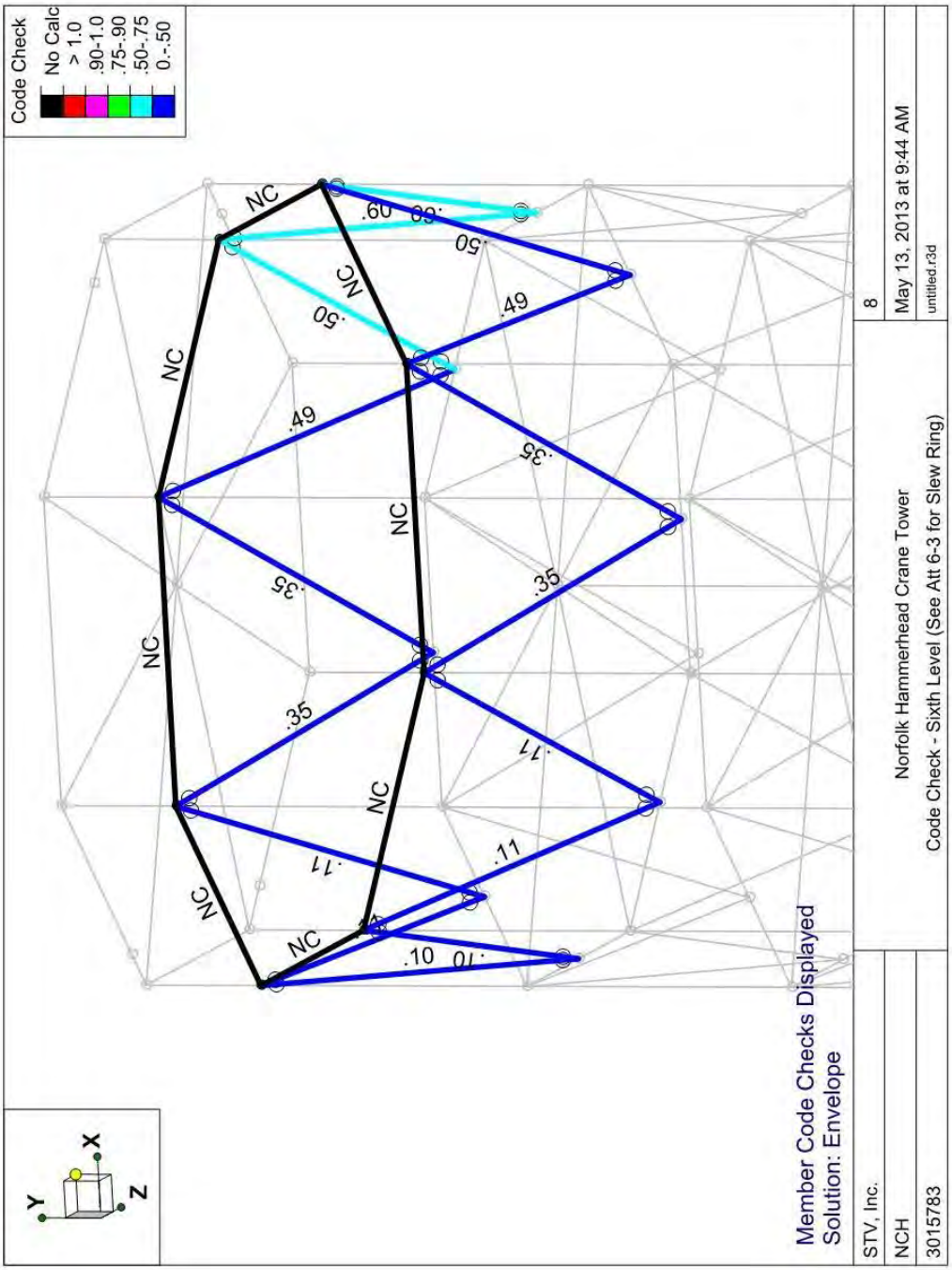
Code Check
No Calc
> 1.0
.90-1.0
.75-.90
.50-.75
0.-.50
NC
.60
.60
.50
.50
.49
.49
.35
.35
.35
.35
.11
.11
.11
.10
.10
Member Code Checks Displayed
Solution: Envelope
STV, Inc.
NCH
3015783
Norfolk Hammerhead Crane Tower
Code Check - Sixth Level (See Att 6-3 for Slew Ring)
8
May 13, 2013 at 9:44 AM
untitled.r3d
Y
X
Z

6-2
Tower Base Analysis

6-2-1

Anchor Bolt Capacity

Per ACI 318-05 - App. D

STV

CLIENT	NAVFAC	MADE BY	CHECKED BY	PROJECT NO.	
PROJECT	HAMMER HEAD CRANE	NCH		3015783	
SUBJECT	ANCHOR BOLT EVAL.	DATE	DATE	REVISION	SHEET NO.
					1 OF 3

ANCHOR BOLT CAPACITY

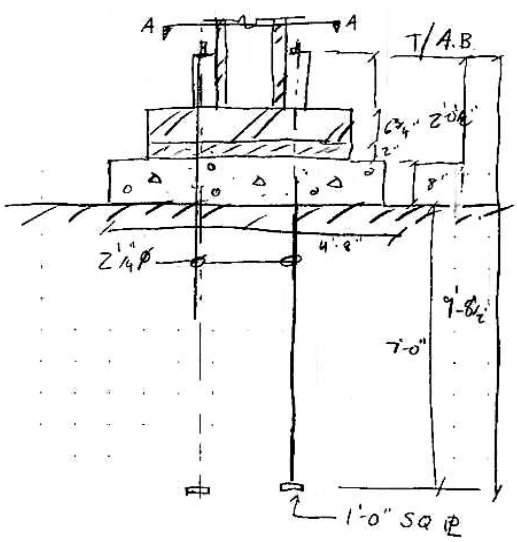

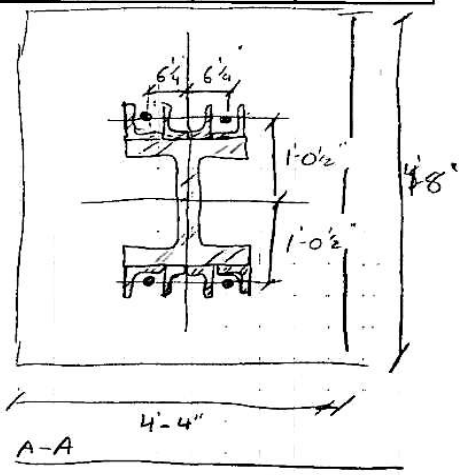

NOTE: DIM'S REF CONTRACT H2221, SHT D-1 + FIELD MEASUREMENTS

DESIGN CODE ACI 318-05, APP D

BOLT DIMENSIONS

TYPE: HEADED STUD, CAST-IN-PLACE
DIA: 2¼"
n_t: 10 threads/in (assumed)
A_{se}: $= \pi\left(\frac{2.25"}{2}\right)^2 = 3.64\ in^2$
$F_{yu} = 33$ ksi
$F_{tu} = 55$ ksi

CONCRETE

TYPE: CRACKED
$h_{ef} = 84"$
$n_x = 2$
$n_y = 2$
$n = 4$
$S_x = 25"$
$S_y = 12.5"$
$f'_c = 3{,}000$ psi (assumed)

EDGE DISTANCES >> 1.5 × h_{ef}

REINFORCEMENT TIES ANCHORAGE TO STRUCTURE, CONDITION "A" PER §D4.4

STV

CLIENT	NAVFAC	MADE BY	CHECKED BY	PROJECT NO.	
PROJECT	HAMMERHEAD CRANE	NCH		3015783	
SUBJECT	ANCHOR BOLT EVAL.	DATE	DATE	REVISION	SHEET NO.
					2 of 5

TENSION:

STEEL STRENGTH

$\phi = 0.75$ §D4.4

$N_{sa} = n A_{se} f_{uta} = (4)(3.64\,in^2)(55\,ksi) = \boxed{800^k}$ eq D-3

CONCRETE BREAKOUT

$e'_N = 0''$

$\psi_{ec,N} = 1.0$ eq D-9

$\psi_{ed,N} = 1.0$ eq D-10

$\psi_{c,N} = 1.0$ §D.5.2.1

$A_{Nc}/A_{Nco} = 1.0$ $(c_a > 1.5\,h_{ef})$

$k_c = 24$

$N_b = k_c \sqrt{f'_c}\, h_{ef}^{1.5}$

$= (24)\sqrt{3000\,psi}\,(8\,in)^{1.5} = 1{,}012^k$

$N_{cbg} = \left(\frac{A_{Nc}}{A_{Nco}}\right) \psi_{ec,N}\, \psi_{ed,N}\, \psi_{c,N}\, \overset{N/A}{\psi_{cp,N}}\, N_b$

$= (1.0)(1.0)(1.0)(1.0)\,(1{,}012^k)$ eq D-4 $= \boxed{1012^k}$

$\phi = 0.75$ §D.4.4

PULLOUT

$\psi_{c,p} = 1.00$ §D.5.3.6

Plate dia $= 12''$
$A_{brg} = 109\,in^2$ } $N_p = 8 A_{brg} f'_c = 8 \times 109\,in^2 \times 3{,}000\,psi$ $\boxed{= 2618^k}$

$N_{pn} = \psi N_p = 10{,}472^k$

BLOWOUT: N/A

TENSION SUMMARY

STEEL STRENGTH: $\phi N_{sa} = 600^k$ ← CONTROLS
BREAKOUT $\phi N_{cbg} = 743^k$
PULLOUT $\phi N_{pn} = 7{,}860^k$

STV

CLIENT NAVFAC	MADE BY	CHECKED BY	PROJECT NO.	
PROJECT HAMMER HEAD CRANE	NCH		3015 783	
SUBJECT	DATE	DATE	REVISION	SHEET NO.
ANCHOR BOLT EMAIL				3 OF 3

SHEAR

STEEL STRENGTH

GROUT PAD reduction = 0.8

$V_{sa} = nA_{se} f_{uta} = (4)(3.64\ in^2)(55\ ksi) = 800.6^k$ (eq D-19))

$\phi = 0.65$ (§D.4.4)

$\phi V_{sA} = 0.8 \cdot \phi \cdot V_{sA} = 0.8 \cdot 0.65 \times 800^k = \boxed{416^k}$

BREAKOUT - N/A

PRYOUT

$h_{ef} = 84'' > d$

$k_{cp} = 2$ (§6.3.1)

$\phi = 0.75$

$\phi V_{cpg} = \phi k_{cp} N_{cbg} = (0.75)(2)(990^k) = \boxed{1,485^k}$

STEEL CONTROLS -

$\boxed{\phi V = 416^k}$

6-2-2

Column Base Code-Check

This section evaluates the acceptability of the column bases based on the application of various load combinations to the shear and pullout capacity of each column base's grouping of four (4) anchor bolts (capacity determined in Attachment 6-2-1). Per ACI requirements, LRFD load combinations were used. For each line, an Interaction value less than 1.0 indicates acceptability.

Pinned Base Column Loads at Hammerhead Crane
Under Various Loading Conditions
Reactions for Single Load Types

Dead and Wind Loads

	DL		
Col	RX (kips)	RY (kips)	RZ (kips)
C1	15.31	918.53	-3.07
C2	15.43	918.59	2.10
C3	-0.30	716.21	3.28
C4	-1.79	426.95	-0.74
C5	-12.16	223.42	0.26
C6	-10.94	218.59	-2.51
C7	-2.26	422.60	0.26
C8	-3.30	702.03	0.42

	WL-X		
Col	RX (kips)	RY (kips)	RZ (kips)
C1	-30.47	-209.67	3.70
C2	-29.96	-221.21	-3.66
C3	-15.71	-85.79	0.72
C4	-15.18	85.91	-0.70
C5	-29.10	221.07	3.72
C6	-29.97	209.63	-3.76
C7	-15.04	101.29	0.23
C8	-15.33	-101.23	-0.25

	WL-Z		
Col	RX (kips)	RY (kips)	RZ (kips)
C1	64.69	193.15	-2.11
C2	-7.66	-142.89	8.29
C3	-46.37	-392.08	-43.36
C4	-34.31	-434.17	-122.02
C5	-56.12	-121.54	-75.85
C6	8.87	231.45	-70.42
C7	35.06	280.37	-0.04
C8	35.84	385.72	0.27

Seismic Loads

	EL-X		
Col	RX (kips)	RY (kips)	RZ (kips)
C1	-29.54	-179.79	3.70
C2	-29.17	-191.08	-3.43
C3	-15.72	-73.45	0.73
C4	-15.31	73.49	-0.79
C5	-28.89	191.06	3.57
C6	-29.32	179.76	-3.76
C7	-15.12	88.70	0.21
C8	-15.39	-88.68	-0.22

	EL-Y		
Col	RX (kips)	RY (kips)	RZ (kips)
C1	0.40	39.52	-0.07
C2	0.54	39.95	0.09
C3	0.00	31.90	0.09
C4	-0.08	20.71	-0.07
C5	-0.41	13.07	0.02
C6	-0.23	12.46	-0.05
C7	-0.10	20.52	0.00
C8	-0.11	31.32	0.00

	EL-Z		
Col	RX (kips)	RY (kips)	RZ (kips)
C1	10.85	111.50	-26.12
C2	18.47	-61.87	-25.47
C3	1.42	-208.81	-52.26
C4	8.55	-203.55	-42.75
C5	-9.75	-64.56	-14.42
C6	-20.30	106.45	-17.02
C7	-5.12	167.23	-0.18
C8	-4.12	153.62	-0.24

Allowable Pullout & Shear	
ϕNn =	600.00
ϕVn =	416.00

Interaction Check per ACI-318-05

$$\frac{Nu}{\phi Nn} + \frac{Vu}{\phi Vn} < 1.2$$

Reactions for LRFD Load Combinations

*Notes:

1) WL >> EL in X & Z Directions, Wind only used

2) WL reversible in X & Z, EL reversible in Y directions

	1.2*DL + 1.6*WLX							
Col	RX (kips)	RY (kips)	RZ (kips)	Vu	Vu/ϕVn	Ry/ϕNn	Interaction	Code Check
C1	-30.38	766.76	2.24	30.46	0.07	0.00	0.07	ok
C2	-29.42	748.37	-3.34	29.61	0.07	0.00	0.07	ok
C3	-25.50	722.19	5.09	26.00	0.06	0.00	0.06	ok
C4	-26.43	649.79	-2.01	26.51	0.06	0.00	0.06	ok
C5	-61.15	621.81	6.27	61.47	0.15	0.00	0.15	ok
C6	-61.08	597.71	-9.03	61.75	0.15	0.00	0.15	ok
C7	-26.77	669.19	0.68	26.78	0.06	0.00	0.06	ok
C8	-28.49	680.46	0.11	28.49	0.07	0.00	0.07	ok

	1.2*DL - 1.6*WLX							
Col	RX (kips)	RY (kips)	RZ (kips)	V-res	Vu/ϕVn	Ry/ϕNn	Interaction	Code Check
C1	67.13	1437.70	-9.60	67.81	0.16	0.00	0.16	ok
C2	66.45	1456.24	8.38	66.97	0.16	0.00	0.16	ok
C3	24.78	996.71	2.78	24.94	0.06	0.00	0.06	ok
C4	22.15	374.89	0.23	22.15	0.05	0.00	0.05	ok
C5	31.98	-85.61	-5.65	32.47	0.08	0.14	0.22	ok
C6	34.82	-73.10	3.01	34.95	0.08	0.12	0.21	ok
C7	21.35	345.05	-0.05	21.35	0.05	0.00	0.05	ok
C8	20.57	1004.41	0.89	20.59	0.05	0.00	0.05	ok

	1.2*DL + 1.6*WLZ							
Col	RX (kips)	RY (kips)	RZ (kips)	V-res	Vu/ϕVn	Ry/ϕNn	Interaction	Code Check
C1	121.88	1411.26	-7.06	122.09	0.29	0.00	0.29	ok
C2	6.25	873.69	15.78	16.98	0.04	0.00	0.04	ok
C3	-74.55	232.12	-65.45	99.20	0.24	0.00	0.24	ok
C4	-57.04	-182.34	-196.13	204.26	0.49	0.30	0.79	ok
C5	-104.37	73.64	-121.05	159.83	0.38	0.00	0.38	ok
C6	1.06	632.62	-115.67	115.67	0.28	0.00	0.28	ok
C7	53.39	955.71	0.24	53.39	0.13	0.00	0.13	ok
C8	53.38	1459.59	0.94	53.39	0.13	0.00	0.13	ok

	1.2*DL - 1.6*WLZ							
Col	RX (kips)	RY (kips)	RZ (kips)	V-res	Vu/ϕVn	Ry/ϕNn	Interaction	Code Check
C1	-85.13	793.20	-0.30	85.13	0.20	0.00	0.20	ok
C2	30.77	1330.92	-10.75	32.59	0.08	0.00	0.08	ok
C3	73.84	1486.78	73.32	104.06	0.25	0.00	0.25	ok
C4	52.76	1207.02	194.35	201.38	0.48	0.00	0.48	ok
C5	75.20	462.56	121.67	143.03	0.34	0.00	0.34	ok
C6	-27.32	-108.01	109.66	113.01	0.27	0.18	0.45	ok
C7	-58.81	58.54	0.38	58.81	0.14	0.00	0.14	ok
C8	-61.31	225.28	0.07	61.31	0.15	0.00	0.15	ok

Reactions for LRFD Load Combinations

*Notes:

1) WL >> EL in X & Z Directions, Wind only used

2) WL reversible in X & Z, EL reversible in Y directions

	0.9*DL + 1.6*WLX							
Col	RX (kips)	RY (kips)	RZ (kips)	V-res	Vu/ϕVn	Ry/ϕNn	Interaction	Code Check
C1	-34.97	491.20	3.16	35.12	0.08	0.00	0.08	ok
C2	-34.05	472.80	-3.97	34.28	0.08	0.00	0.08	ok
C3	-25.41	507.33	4.11	25.74	0.06	0.00	0.06	ok
C4	-25.90	521.70	-1.79	25.96	0.06	0.00	0.06	ok
C5	-57.50	554.79	6.19	57.83	0.14	0.00	0.14	ok
C6	-57.80	532.13	-8.27	58.39	0.14	0.00	0.14	ok
C7	-26.09	542.41	0.60	26.10	0.06	0.00	0.06	ok
C8	-27.50	469.85	-0.01	27.50	0.07	0.00	0.07	ok

	0.9*DL - 1.6*WLX							
Col	RX (kips)	RY (kips)	RZ (kips)	V-res	Vu/ϕVn	Ry/ϕNn	Interaction	Code Check
C1	62.53	1162.15	-8.68	63.13	0.15	0.00	0.15	ok
C2	61.82	1180.67	7.75	62.30	0.15	0.00	0.15	ok
C3	24.87	781.84	1.80	24.94	0.06	0.00	0.06	ok
C4	22.69	246.81	0.45	22.69	0.05	0.00	0.05	ok
C5	35.62	-152.63	-5.73	36.08	0.09	0.25	0.34	ok
C6	38.10	-138.68	3.76	38.29	0.09	0.23	0.32	ok
C7	22.03	218.27	-0.13	22.03	0.05	0.00	0.05	ok
C8	21.56	793.80	0.77	21.57	0.05	0.00	0.05	ok

	0.9*DL + 1.6*WLZ							
Col	RX (kips)	RY (kips)	RZ (kips)	V-res	Vu/ϕVn	Ry/ϕNn	Interaction	Code Check
C1	117.29	1135.71	-6.14	117.45	0.28	0.00	0.28	ok
C2	1.63	598.12	15.15	15.24	0.04	0.00	0.04	ok
C3	-74.46	17.26	-66.43	99.79	0.24	0.00	0.24	ok
C4	-56.51	-310.42	-195.91	203.89	0.49	0.52	1.01	ok
C5	-100.73	6.62	-121.13	157.54	0.38	0.00	0.38	ok
C6	4.34	567.04	-114.92	115.00	0.28	0.00	0.28	ok
C7	54.07	828.93	0.17	54.07	0.13	0.00	0.13	ok
C8	54.37	1248.98	0.81	54.38	0.13	0.00	0.13	ok

	0.9*DL - 1.6*WLZ							
Col	RX (kips)	RY (kips)	RZ (kips)	V-res	Vu/ϕVn	Ry/ϕNn	Interaction	Code Check
C1	-89.73	517.64	0.62	89.73	0.22	0.00	0.22	ok
C2	26.14	1055.35	-11.38	28.51	0.07	0.00	0.07	ok
C3	73.93	1271.91	72.34	103.43	0.25	0.00	0.25	ok
C4	53.29	1078.93	194.57	201.74	0.48	0.00	0.48	ok
C5	78.85	395.54	121.59	144.92	0.35	0.00	0.35	ok
C6	-24.04	-173.59	110.41	113.00	0.27	0.29	0.56	ok
C7	-58.13	-68.24	0.30	58.13	0.14	0.11	0.25	ok
C8	-60.32	14.67	-0.06	60.32	0.14	0.00	0.14	ok

Reactions for LRFD Load Combinations

*Notes:

1) WL >> EL in X & Z Directions, Wind only used

2) WL reversible in X & Z, EL reversible in Y directions

	1.2*DL + 1.2* WLX + 1.2*WLZ							
Col	RX (kips)	RY (kips)	RZ (kips)	V-res	Vu/ϕVn	Ry/ϕNn	Interaction	Code Check
C1	59.44	1082.40	-1.78	59.47	0.14	0.00	0.14	ok
C2	-26.63	665.40	8.07	27.83	0.07	0.00	0.07	ok
C3	-74.86	286.01	-47.23	88.51	0.21	0.00	0.21	ok
C4	-61.54	94.42	-148.16	160.43	0.39	0.00	0.39	ok
C5	-116.85	387.54	-86.24	145.23	0.35	0.00	0.35	ok
C6	-38.46	791.59	-92.02	99.73	0.24	0.00	0.24	ok
C7	21.32	965.11	0.53	21.33	0.05	0.00	0.05	ok
C8	20.65	1183.82	0.54	20.66	0.05	0.00	0.05	ok

	1.2*DL + 1.2* WLX - 1.2*WLZ							
Col	RX (kips)	RY (kips)	RZ (kips)	V-res	Vu/ϕVn	Ry/ϕNn	Interaction	Code Check
C1	-95.82	618.85	3.30	95.88	0.23	0.00	0.23	ok
C2	-8.25	1008.32	-11.82	14.42	0.03	0.00	0.03	ok
C3	36.43	1227.00	56.84	67.51	0.16	0.00	0.16	ok
C4	20.81	1136.44	144.69	146.18	0.35	0.00	0.35	ok
C5	17.83	679.23	95.80	97.44	0.23	0.00	0.23	ok
C6	-59.74	236.12	76.98	97.44	0.23	0.00	0.23	ok
C7	-62.83	292.24	0.63	62.83	0.15	0.00	0.15	ok
C8	-65.37	258.09	-0.12	65.37	0.16	0.00	0.16	ok

	1.2*DL - 1.2* WLX + 1.2*WLZ							
Col	RX (kips)	RY (kips)	RZ (kips)	V-res	Vu/ϕVn	Ry/ϕNn	Interaction	Code Check
C1	132.57	1585.61	-10.66	133.00	0.32	0.00	0.32	ok
C2	45.27	1196.30	16.86	48.31	0.12	0.00	0.12	ok
C3	-37.15	491.90	-48.96	61.46	0.15	0.00	0.15	ok
C4	-25.10	-111.75	-146.48	148.61	0.36	0.19	0.54	ok
C5	-47.01	-143.03	-95.18	106.15	0.26	0.24	0.49	ok
C6	33.47	288.49	-82.99	89.49	0.22	0.00	0.22	ok
C7	57.41	722.01	-0.01	57.41	0.14	0.00	0.14	ok
C8	57.44	1426.78	1.12	57.45	0.14	0.00	0.14	ok

	1.2*DL - 1.2* WLX - 1.2*WLZ							
Col	RX (kips)	RY (kips)	RZ (kips)	V-res	Vu/ϕVn	Ry/ϕNn	Interaction	Code Check
C1	-22.69	1122.06	-5.58	23.37	0.06	0.00	0.06	ok
C2	63.66	1539.22	-3.04	63.73	0.15	0.00	0.15	ok
C3	74.14	1432.89	55.11	92.38	0.22	0.00	0.22	ok
C4	57.25	930.26	146.38	157.18	0.38	0.00	0.38	ok
C5	87.68	148.67	86.86	123.42	0.30	0.00	0.30	ok
C6	12.19	-266.99	86.01	86.87	0.21	0.44	0.65	ok
C7	-26.74	49.13	0.09	26.74	0.06	0.00	0.06	ok
C8	-28.58	501.05	0.47	28.58	0.07	0.00	0.07	ok

Reactions for LRFD Load Combinations

*Notes:

1) WL >> EL in X & Z Directions, Wind only used

2) WL reversible in X & Z, EL reversible in Y directions

	0.9*DL + 1.2* WLX + 1.2*WLZ							
Col	RX (kips)	RY (kips)	RZ (kips)	V-res	Vu/ϕVn	Ry/ϕNn	Interaction	Code Check
C1	54.85	806.84	-0.86	54.85	0.13	0.00	0.13	ok
C2	-31.26	389.82	7.44	32.14	0.08	0.00	0.08	ok
C3	-74.77	71.15	-48.22	88.97	0.21	0.00	0.21	ok
C4	-61.00	-33.67	-147.94	160.02	0.38	0.06	0.44	ok
C5	-113.20	320.51	-86.32	142.36	0.34	0.00	0.34	ok
C6	-35.17	726.02	-91.27	97.81	0.24	0.00	0.24	ok
C7	22.00	838.33	0.46	22.00	0.05	0.00	0.05	ok
C8	21.64	973.21	0.41	21.65	0.05	0.00	0.05	ok

	0.9*DL + 1.2* WLX - 1.2*WLZ							
Col	RX (kips)	RY (kips)	RZ (kips)	V-res	Vu/ϕVn	Ry/ϕNn	Interaction	Code Check
C1	-100.42	343.30	4.22	100.50	0.24	0.00	0.24	ok
C2	-12.87	732.74	-12.45	17.91	0.04	0.00	0.04	ok
C3	36.52	1012.14	55.85	66.74	0.16	0.00	0.16	ok
C4	21.35	1008.35	144.92	146.48	0.35	0.00	0.35	ok
C5	21.48	612.21	95.72	98.10	0.24	0.00	0.24	ok
C6	-56.45	170.55	77.73	96.07	0.23	0.00	0.23	ok
C7	-62.15	165.46	0.56	62.15	0.15	0.00	0.15	ok
C8	-64.38	47.48	-0.24	64.38	0.15	0.00	0.15	ok

	0.9*DL - 1.2* WLX + 1.2*WLZ							
Col	RX (kips)	RY (kips)	RZ (kips)	V-res	Vu/ϕVn	Ry/ϕNn	Interaction	Code Check
C1	127.98	1310.05	-9.74	128.35	0.31	0.00	0.31	ok
C2	40.64	920.72	16.23	43.76	0.11	0.00	0.11	ok
C3	-37.06	277.03	-49.95	62.20	0.15	0.00	0.15	ok
C4	-24.56	-239.84	-146.26	148.30	0.36	0.40	0.76	ok
C5	-43.36	-210.05	-95.26	104.66	0.25	0.35	0.60	ok
C6	36.76	222.91	-82.24	90.08	0.22	0.00	0.22	ok
C7	58.09	595.23	-0.09	58.09	0.14	0.00	0.14	ok
C8	58.43	1216.17	1.00	58.44	0.14	0.00	0.14	ok

	0.9*DL - 1.2* WLX - 1.2*WLZ							
Col	RX (kips)	RY (kips)	RZ (kips)	V-res	Vu/ϕVn	Ry/ϕNn	Interaction	Code Check
C1	-27.29	846.50	-4.66	27.68	0.07	0.00	0.07	ok
C2	59.03	1263.64	-3.67	59.14	0.14	0.00	0.14	ok
C3	74.23	1218.03	54.12	91.87	0.22	0.00	0.22	ok
C4	57.79	802.18	146.60	157.58	0.38	0.00	0.38	ok
C5	91.32	81.64	86.78	125.98	0.30	0.00	0.30	ok
C6	15.47	-332.56	86.76	88.13	0.21	0.55	0.77	ok
C7	-26.06	-77.65	0.01	26.06	0.06	0.13	0.19	ok
C8	-27.59	290.44	0.34	27.59	0.07	0.00	0.07	ok

Reactions for LRFD Load Combinations

*Notes:

1) WL >> EL in X & Z Directions, Wind only used

2) WL reversible in X & Z, EL reversible in Y directions

	1.2*DL + 1.0*ELY							
Col	RX (kips)	RY (kips)	RZ (kips)	V-res	Vu/ϕVn	Ry/ϕNn	Interaction	Code Check
C1	18.77	1141.75	-3.75	19.15	0.05	0.00	0.05	ok
C2	19.05	1142.26	2.61	19.23	0.05	0.00	0.05	ok
C3	-0.36	891.35	4.02	4.04	0.01	0.00	0.01	ok
C4	-2.22	533.05	-0.97	2.42	0.01	0.00	0.01	ok
C5	-15.00	281.18	0.33	15.00	0.04	0.00	0.04	ok
C6	-13.36	274.76	-3.06	13.71	0.03	0.00	0.03	ok
C7	-2.81	527.65	0.31	2.83	0.01	0.00	0.01	ok
C8	-4.07	873.75	0.51	4.11	0.01	0.00	0.01	ok

	0.9*DL - 1.0*ELY							
Col	RX (kips)	RY (kips)	RZ (kips)	V-res	Vu/ϕVn	Ry/ϕNn	Interaction	Code Check
C1	13.38	787.15	-2.69	13.65	0.03	0.00	0.03	ok
C2	13.35	786.78	1.80	13.47	0.03	0.00	0.03	ok
C3	-0.26	612.69	2.87	2.88	0.01	0.00	0.01	ok
C4	-1.53	363.54	-0.59	1.64	0.00	0.00	0.00	ok
C5	-10.53	188.00	0.21	10.53	0.03	0.00	0.03	ok
C6	-9.62	184.27	-2.20	9.87	0.02	0.00	0.02	ok
C7	-1.93	359.82	0.23	1.94	0.00	0.00	0.00	ok
C8	-2.86	600.51	0.37	2.88	0.01	0.00	0.01	ok

	1.4*DL							
Col	RX (kips)	RY (kips)	RZ (kips)	V-res	Vu/ϕVn	Ry/ϕNn	Interaction	Code Check
C1	21.44	1285.94	-4.29	21.86	0.05	0.00	0.05	ok
C2	21.60	1286.03	2.94	21.80	0.05	0.00	0.05	ok
C3	-0.42	1002.69	4.59	4.61	0.01	0.00	0.01	ok
C4	-2.50	597.73	-1.04	2.71	0.01	0.00	0.01	ok
C5	-17.02	312.79	0.36	17.02	0.04	0.00	0.04	ok
C6	-15.32	306.02	-3.51	15.72	0.04	0.00	0.04	ok
C7	-3.16	591.64	0.36	3.18	0.01	0.00	0.01	ok
C8	-4.62	982.84	0.59	4.66	0.01	0.00	0.01	ok

Reactions for LRFD Load Combinations

*Notes:

1) WL >> EL in X & Z Directions, Wind only used

2) WL reversible in X & Z, EL reversible in Y directions

	1.2*DL + 1.0*ELY							
Col	RX (kips)	RY (kips)	RZ (kips)	V-res	Vu/ϕVn	Ry/ϕNn	Interaction	Code Check
C1	18.77	1141.75	-3.75	19.15	0.05	0.00	0.05	ok
C2	19.05	1142.26	2.61	19.23	0.05	0.00	0.05	ok
C3	-0.36	891.35	4.02	4.04	0.01	0.00	0.01	ok
C4	-2.22	533.05	-0.97	2.42	0.01	0.00	0.01	ok
C5	-15.00	281.18	0.33	15.00	0.04	0.00	0.04	ok
C6	-13.36	274.76	-3.06	13.71	0.03	0.00	0.03	ok
C7	-2.81	527.65	0.31	2.83	0.01	0.00	0.01	ok
C8	-4.07	873.75	0.51	4.11	0.01	0.00	0.01	ok

	0.9*DL - 1.0*ELY							
Col	RX (kips)	RY (kips)	RZ (kips)	V-res	Vu/ϕVn	Ry/ϕNn	Interaction	Code Check
C1	13.38	787.15	-2.69	13.65	0.03	0.00	0.03	ok
C2	13.35	786.78	1.80	13.47	0.03	0.00	0.03	ok
C3	-0.26	612.69	2.87	2.88	0.01	0.00	0.01	ok
C4	-1.53	363.54	-0.59	1.64	0.00	0.00	0.00	ok
C5	-10.53	188.00	0.21	10.53	0.03	0.00	0.03	ok
C6	-9.62	184.27	-2.20	9.87	0.02	0.00	0.02	ok
C7	-1.93	359.82	0.23	1.94	0.00	0.00	0.00	ok
C8	-2.86	600.51	0.37	2.88	0.01	0.00	0.01	ok

	1.4*DL							
Col	RX (kips)	RY (kips)	RZ (kips)	V-res	Vu/ϕVn	Ry/ϕNn	Interaction	Code Check
C1	21.44	1285.94	-4.29	21.86	0.05	0.00	0.05	ok
C2	21.60	1286.03	2.94	21.80	0.05	0.00	0.05	ok
C3	-0.42	1002.69	4.59	4.61	0.01	0.00	0.01	ok
C4	-2.50	597.73	-1.04	2.71	0.01	0.00	0.01	ok
C5	-17.02	312.79	0.36	17.02	0.04	0.00	0.04	ok
C6	-15.32	306.02	-3.51	15.72	0.04	0.00	0.04	ok
C7	-3.16	591.64	0.36	3.18	0.01	0.00	0.01	ok
C8	-4.62	982.84	0.59	4.66	0.01	0.00	0.01	ok

6-3
Slew Ring Structural Analysis

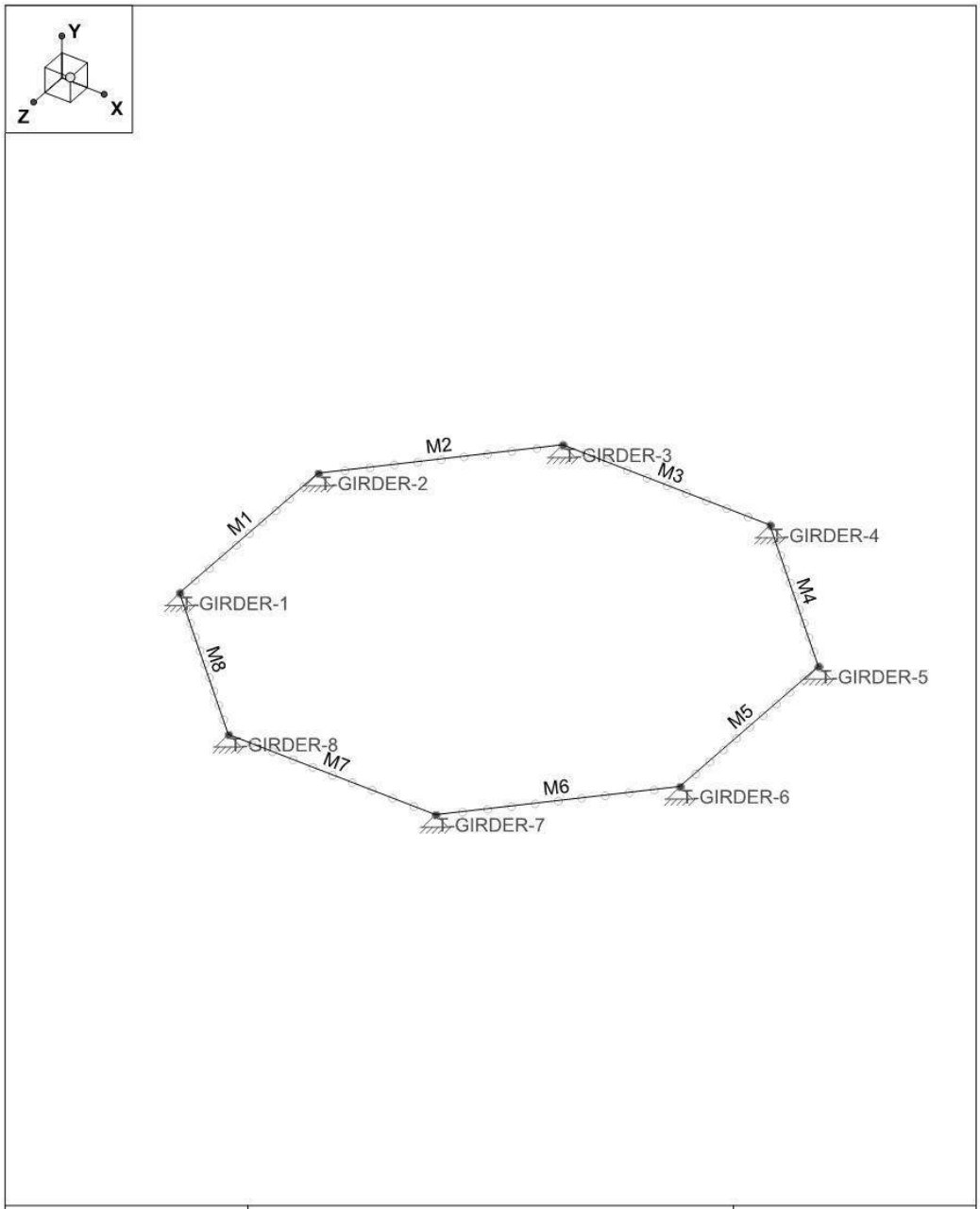

STV, Inc		
NCH	Slew Ring Octagonal Girders	June 5, 2013 at 2:41 PM
3015783	Slew Ring Girder Model Layout	Tower top.r3d

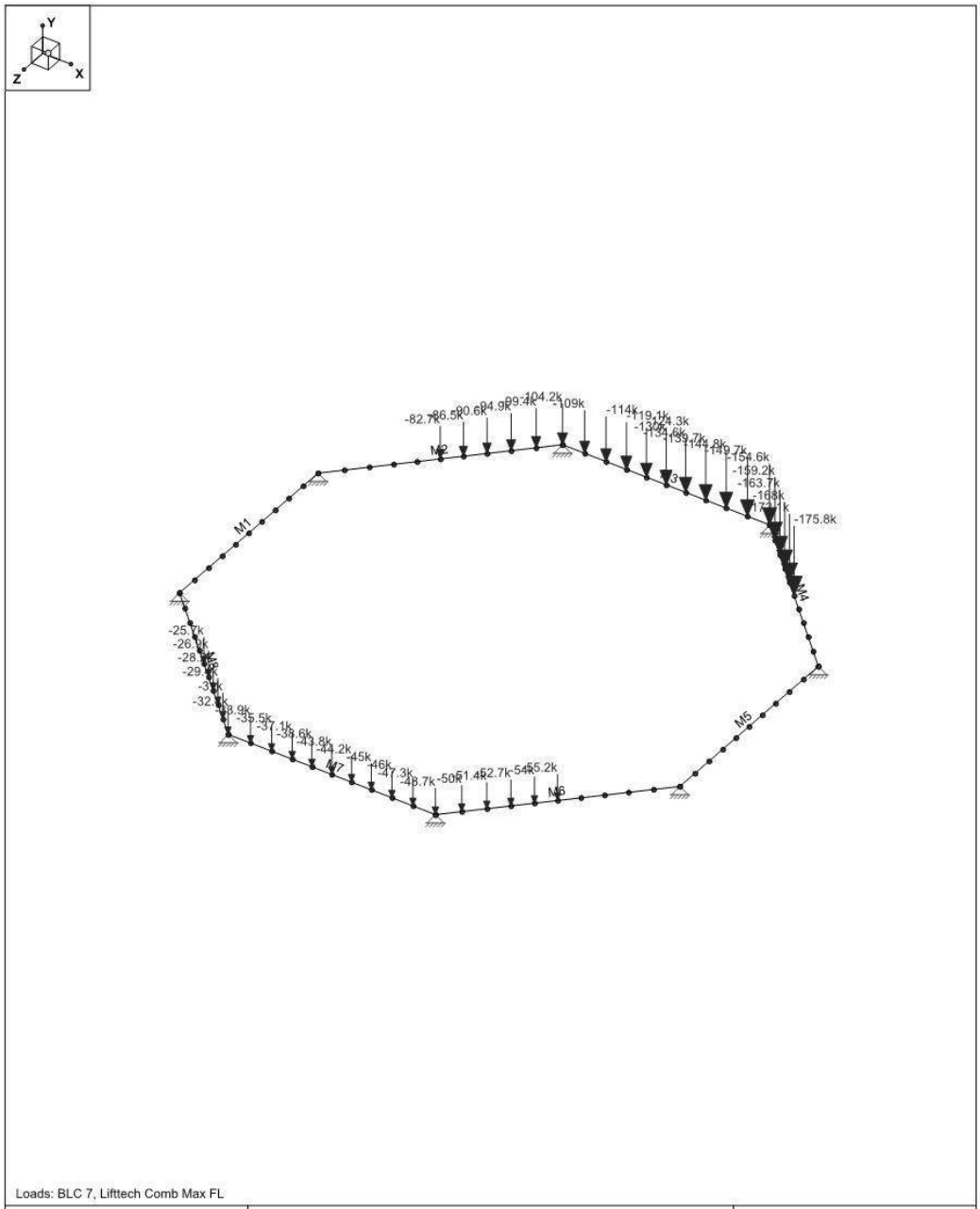

Loads: BLC 7, Lifttech Comb Max FL

STV, Inc		
NCH	Slew Ring Octagonal Girders	June 5, 2013 at 2:46 PM
3015783	Slew Ring Girders with Max Dead + Wind: 1	Tower top.r3d

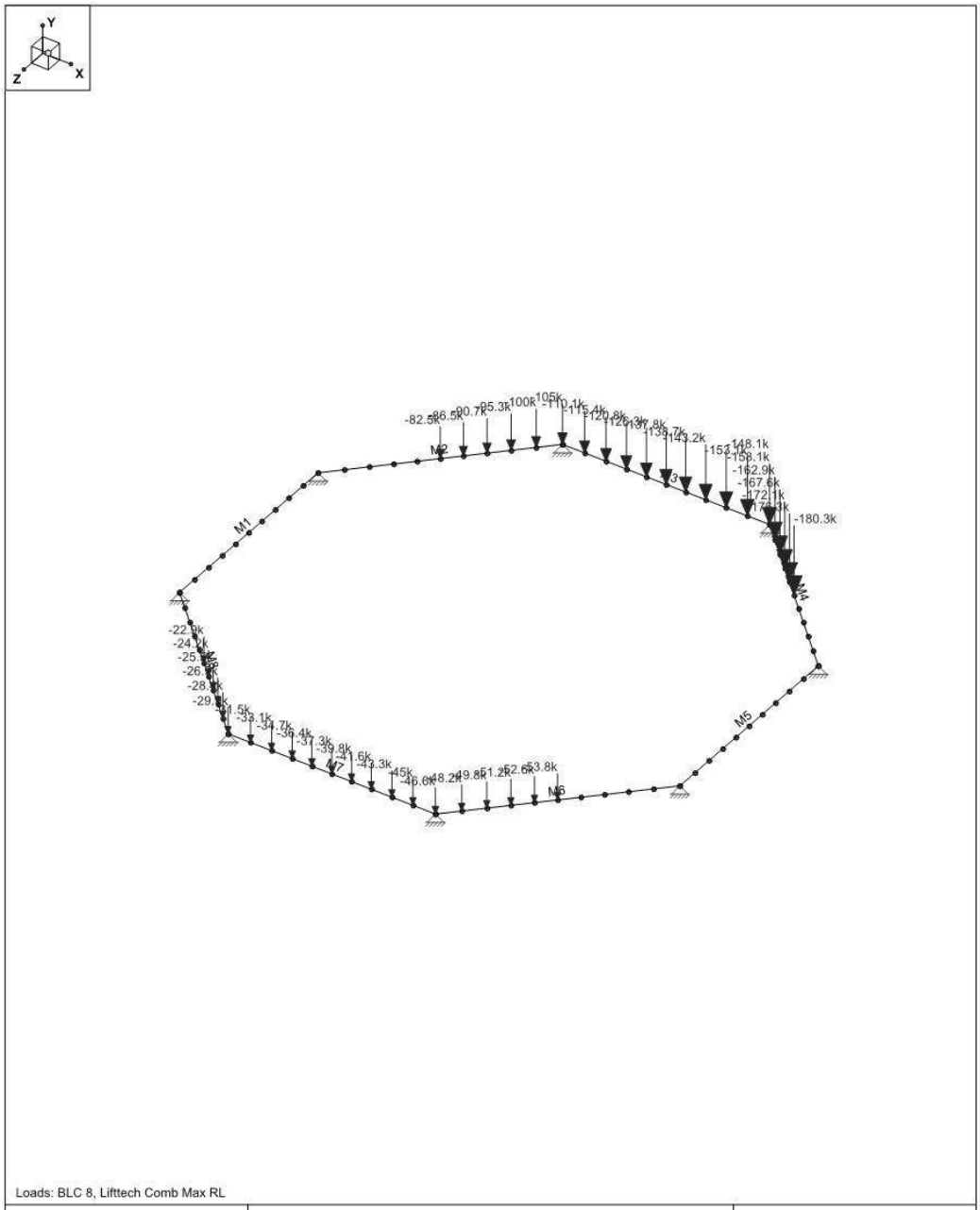

Loads: BLC 8, Lifttech Comb Max RL

STV, Inc		
NCH	Slew Ring Octagonal Girders	June 5, 2013 at 2:47 PM
3015783	Slew Ring Girders with Max Dead + Wind: 2	Tower top.r3d

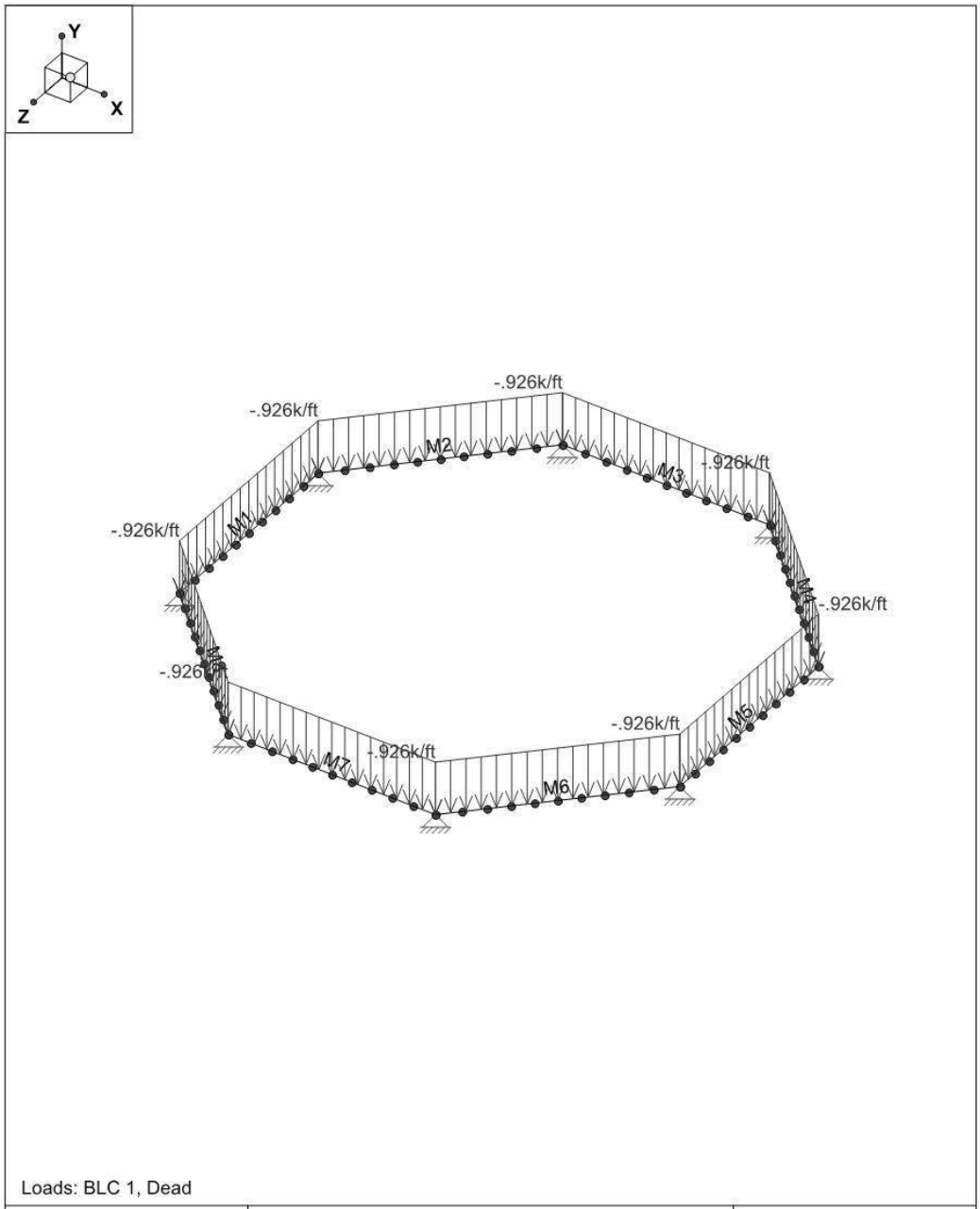

Loads: BLC 1, Dead

STV, Inc		
NCH	Slew Ring Octagonal Girders	June 5, 2013 at 2:49 PM
3015783	Slew Ring Girders with Self Weight	Tower top.r3d

Joint Loads and Enforced Displacements (BLC 7 : Lifttech Comb Max FL)

	Joint Label	L,D,M	Direction	Magnitude[(k,k-ft), (in,rad), (k*s^2/f...
1	ROLLER-21	L	Y	-43.8
2	ROLLER-20	L	Y	-44.2
3	ROLLER-19	L	Y	-45
4	ROLLER-18	L	Y	-46
5	ROLLER-17	L	Y	-47.3
6	ROLLER-16	L	Y	-48.7
7	ROLLER-15	L	Y	-50
8	ROLLER-14	L	Y	-51.4
9	ROLLER-13	L	Y	-52.7
10	ROLLER-12	L	Y	-54
11	ROLLER-11	L	Y	-55.2
12	ROLLER-22	L	Y	-38.6
13	ROLLER-23	L	Y	-37.1
14	ROLLER-24	L	Y	-35.5
15	ROLLER-25	L	Y	-33.9
16	ROLLER-26	L	Y	-32.4
17	ROLLER-27	L	Y	-31
18	ROLLER-28	L	Y	-29.4
19	ROLLER-29	L	Y	-28.2
20	ROLLER-30	L	Y	-26.9
21	ROLLER-31	L	Y	-25.7
22	ROLLER-61	L	Y	-130
23	ROLLER-62	L	Y	-134.6
24	ROLLER-63	L	Y	-139.7
25	ROLLER-64	L	Y	-144.8
26	ROLLER-65	L	Y	-149.7
27	ROLLER-66	L	Y	-154.6
28	ROLLER-67	L	Y	-159.2
29	ROLLER-68	L	Y	-163.7
30	ROLLER-69	L	Y	-168
31	ROLLER-70	L	Y	-172.1
32	ROLLER-71	L	Y	-175.8
33	ROLLER-60	L	Y	-124.3
34	ROLLER-59	L	Y	-119.1
35	ROLLER-58	L	Y	-114
36	ROLLER-57	L	Y	-109
37	ROLLER-56	L	Y	-104.2
38	ROLLER-55	L	Y	-99.4
39	ROLLER-54	L	Y	-94.9
40	ROLLER-53	L	Y	-90.6
41	ROLLER-52	L	Y	-86.5
42	ROLLER-51	L	Y	-82.7

Joint Loads and Enforced Displacements (BLC 8 : Lifttech Comb Max RL)

	Joint Label	L,D,M	Direction	Magnitude[(k,k-ft), (in,rad), (k*s^2/f...
1	ROLLER-21	L	Y	-37.3
2	ROLLER-20	L	Y	-39.8
3	ROLLER-19	L	Y	-41.6
4	ROLLER-18	L	Y	-43.3
5	ROLLER-17	L	Y	-45
6	ROLLER-16	L	Y	-46.6
7	ROLLER-15	L	Y	-48.2
8	ROLLER-14	L	Y	-49.8
9	ROLLER-13	L	Y	-51.2
10	ROLLER-12	L	Y	-52.6
11	ROLLER-11	L	Y	-53.8

Joint Loads and Enforced Displacements (BLC 8 : Lifttech Comb Max RL) (Continued)

	Joint Label	L,D,M	Direction	Magnitude[(k,k-ft), (in,rad), (k*s^2/f...
12	ROLLER-22	L	Y	-36.4
13	ROLLER-23	L	Y	-34.7
14	ROLLER-24	L	Y	-33.1
15	ROLLER-25	L	Y	-31.5
16	ROLLER-26	L	Y	-29.9
17	ROLLER-27	L	Y	-28.4
18	ROLLER-28	L	Y	-26.9
19	ROLLER-29	L	Y	-25.5
20	ROLLER-30	L	Y	-24.2
21	ROLLER-31	L	Y	-22.9
22	ROLLER-61	L	Y	-137.8
23	ROLLER-62	L	Y	-138.7
24	ROLLER-63	L	Y	-143.2
25	ROLLER-64	L	Y	-148.1
26	ROLLER-65	L	Y	-153.1
27	ROLLER-66	L	Y	-158.1
28	ROLLER-67	L	Y	-162.9
29	ROLLER-68	L	Y	-167.6
30	ROLLER-69	L	Y	-172.1
31	ROLLER-70	L	Y	-176.3
32	ROLLER-71	L	Y	-180.3
33	ROLLER-60	L	Y	-126.3
34	ROLLER-59	L	Y	-120.8
35	ROLLER-58	L	Y	-115.4
36	ROLLER-57	L	Y	-110.1
37	ROLLER-56	L	Y	-105
38	ROLLER-55	L	Y	-100
39	ROLLER-54	L	Y	-95.3
40	ROLLER-53	L	Y	-90.7
41	ROLLER-52	L	Y	-86.5
42	ROLLER-51	L	Y	-82.5

Member Section Forces (By Combination)

	LC	Member Label	Sec	Axial[k]	y Shear[k]	z Shear[k]	Torque[k-ft]	y-y Mo...	z-z Mo...
1	38	M1	1	0	18.841	0	-147.459	0	-275.973
2			2	0	13.471	0	-147.459	0	-369.662
3			3	0	8.101	0	-147.459	0	-432.212
4			4	0	2.731	0	-147.459	0	-463.621
5			5	0	-2.638	0	-147.459	0	-463.891
6	38	M2	1	0	127.46	0	-432.29	0	-223.751
7			2	0	122.091	0	-432.29	0	-947.323
8			3	0	116.721	0	-432.29	0	-1639.7...
9			4	0	-148.449	0	-432.29	0	-1386.8...
10			5	0	-348.119	0	-432.29	0	200.782
11	38	M3	1	0	549.193	0	-163.701	0	447.65
12			2	0	320.823	0	-163.701	0	-2256.7...
13			3	0	72.053	0	-163.701	0	-3299.5...
14			4	0	-337.617	0	-163.701	0	-2273.3...
15			5	0	-637.487	0	-163.701	0	780.309
16	38	M4	1	0	622.285	0	436.008	0	667.515
17			2	0	294.015	0	436.008	0	-2249.2...
18			3	0	-227.255	0	436.008	0	-2814.3...
19			4	0	-232.625	0	436.008	0	-1480.9...
20			5	0	-237.995	0	436.008	0	-116.393
21	38	M5	1	0	8.339	0	226.002	0	-390.606
22			2	0	2.969	0	226.002	0	-423.395

Member Section Forces (By Combination) (Continued)

	LC	Member Label	Sec	Axial[k]	y Shear[k]	z Shear[k]	Torque[k-ft]	y-y Mo...	z-z Mo...
23			3	0	-2.401	0	226.002	0	-425.044
24			4	0	-7.77	0	226.002	0	-395.552
25			5	0	-13.14	0	226.002	0	-334.922
26	38	M6	1	0	68.48	0	-77.018	0	-396.633
27			2	0	63.11	0	-77.018	0	-778.176
28			3	0	57.74	0	-77.018	0	-1128.5...
29			4	0	-109.53	0	-77.018	0	-861.697
30			5	0	-216.3	0	-77.018	0	164.661
31	38	M7	1	0	211.279	0	61.973	0	170.893
32			2	0	112.61	0	61.973	0	-840.245
33			3	0	-25.76	0	61.973	0	-1180.7...
34			4	0	-106.83	0	61.973	0	-826.384
35			5	0	-181.6	0	61.973	0	66.541
36	38	M8	1	0	123.013	0	90.873	0	3.23
37			2	0	57.243	0	90.873	0	-565.145
38			3	0	-28.927	0	90.873	0	-697.187
39			4	0	-34.297	0	90.873	0	-613.869
40			5	0	-39.667	0	90.873	0	-299.412

OCTAGONAL GIRDERS

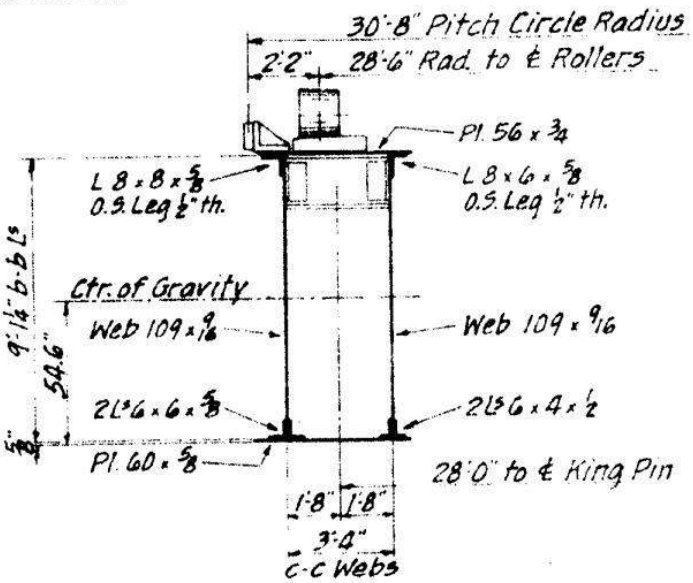

Gross Section Modulus = 8400 (Top) Net Sec. Mod. = 6930 (Bottom)
Sec. Mod. of Top Flge. about vert. axis (Top Cov., Top Ls, + 1/6 of webs) = 990

Shear Case I ..... 1060^k $\frac{h}{t}$ = 73
From Wt. of Girs. ..... 23^k Allowable Stress = 9.2
1083^k 1083 ÷ 9.2 = 118.0 □" req'd.

2 Web Pls. 109 x 9/16 = 122.8 □"

Moment Case I (Simple Span) 5709'^{k}
From Wt. of Girs. = $\frac{45 \times 23.2}{8}$ = 131'^{k}
5840'^{k}

Stress in Bottom Flange = $\frac{5840 \times 12}{6930}$ = 10.12 ^{k}/□"
Stress in Top Flange From vertical forces = $\frac{5840 \times 12}{8400}$ = 8.35 ^{k}/□"
From Pinion ..... 1.52 ^{k}/□"
Allowable Stress = 16 ^{k}/□" Used = 9.87 ^{k}/□"

For Combination with Spud Lock Stress
Moment Case III (front rollers) ... 1816'^{k}
From Wt. of Girs. ..... 131'^{k}
1947'^{k}

Stress in Top Flange From vertical forces = $\frac{1947 \times 12}{8540}$ = 2.73 ^{k}/□"
From Spud Lock ..... 3.24 ^{k}/□"
5.97 ^{k}/□"

STV

CLIENT NAVFAC	MADE BY	CHECKED BY	PROJECT NO.	
PROJECT HAMMERHEAD CRANE	NCH		3015783	
SUBJECT	DATE	DATE	REVISION	SHEET NO.
OCTAGONAL GIRDER				

$F_y = 33^{ksi}$

$S_{x\text{-TOP}} = 8400 in^3$

$S_{x\,BTM} = 6930 in^3$

$A = 264 in^2$ $\quad A_{TF} = 42 in^2$

SHEAR

$V_{all} = 0.4 \times F_y \times A = 3{,}480^K$

FROM RSA - $V_{max} = 622^K \Rightarrow$ SHEAR OK

BENDING / AXIAL

BOTTOM: $F_{all} = 0.6 F_y = 19.8^{ksi}$

$F = F_{b\text{-}BTM} = \frac{M_{max}}{S_{x\text{-}BTM}} = \frac{3{,}329 ft\text{-}k}{6930 in^3} = 5.8^{ksi} < F_{all}$

Top: $F_{all} = 19.8^{ksi}$

$F_{b\text{-}TOP} = \frac{M_{max}}{S_{x\text{-}TOP}} = \frac{3{,}329 ft\text{-}k}{8{,}400 in^3} = 4.8^{ksi}$

AXIAL FROM SPUD LOCK - $LC = D + 0.75(W_x + W_z)$

$P = 0.75(331^K) = 248^K$

ASSUME HALF INTO EACH GIRDER

$P_{TF} = \frac{1}{2} P = 124^K$

$F_{Axial} = \frac{P_{TF}}{A_{TF}} = \frac{124^K}{42 in^2} = 3.0^{ksi}$

$F = F_{b\,TOP} + F_{A\text{-}TF} = 4.8^{ksi} + 3.0^{ksi} = 7.8^{ksi} < F_{all} \Rightarrow$ BENDING OK

6-4
Original Construction Arrangement Drawings

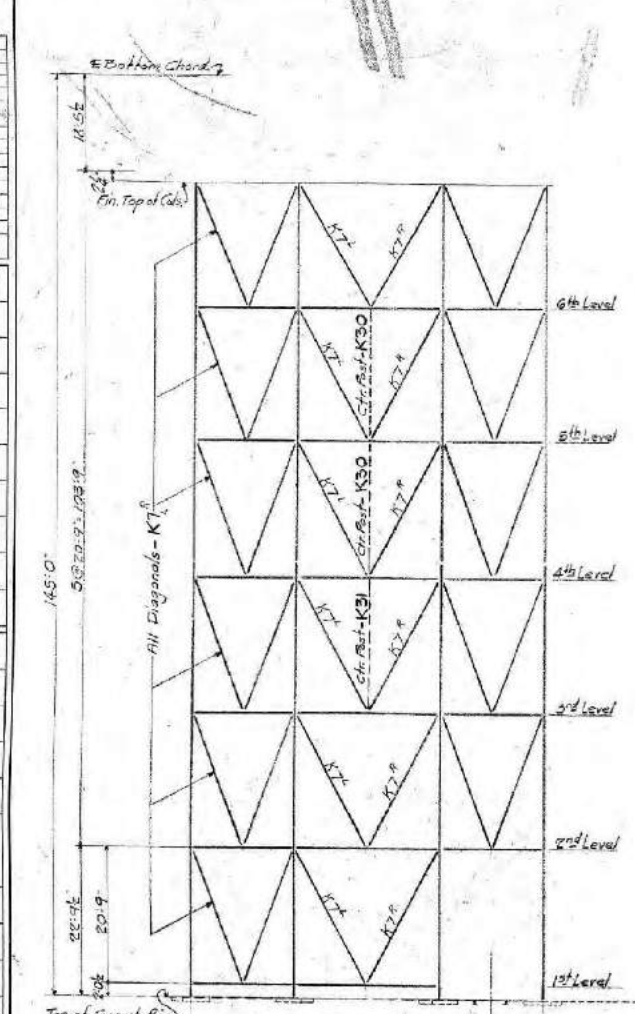

ELEVATION-AA

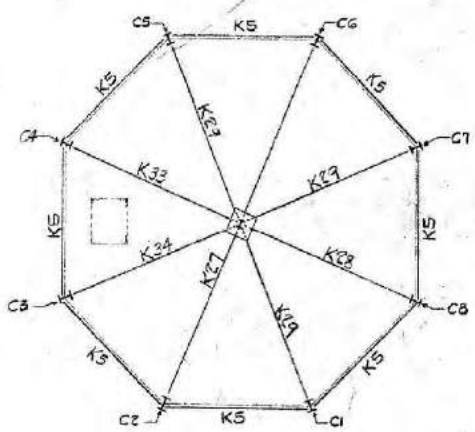

BRACING AT 4th, 5th & 6th LEVELS.

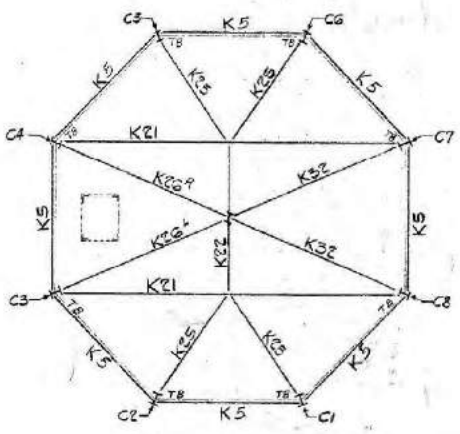

BRACING AT 3rd LEVEL

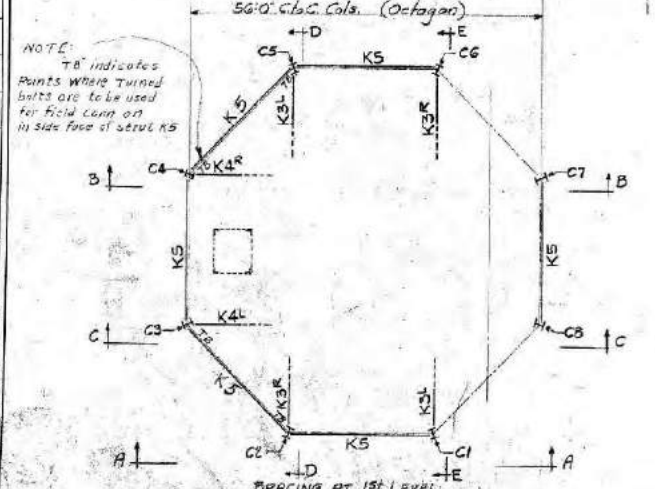

BRACING AT 1st LEVEL

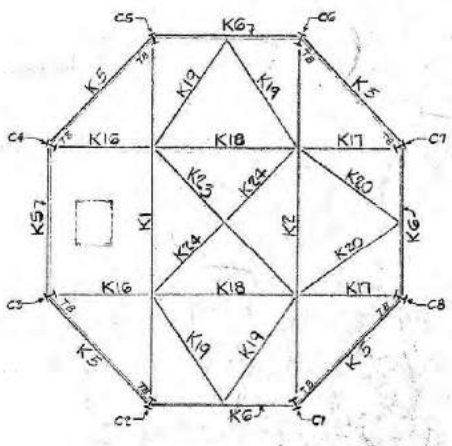

BRACING AT 2nd LEVEL

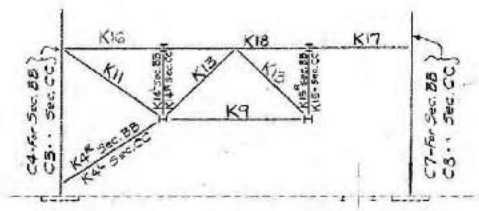

SECTION-BB
SECTION-CC
BTWN. 1st & 2nd LEVELS.

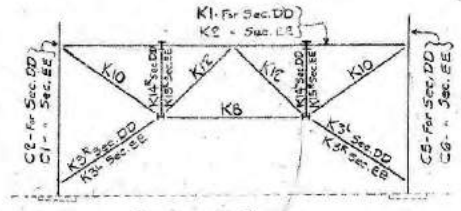

SECTION-DD
SECTION-EE
BTWN. 1st & 2nd LEVELS

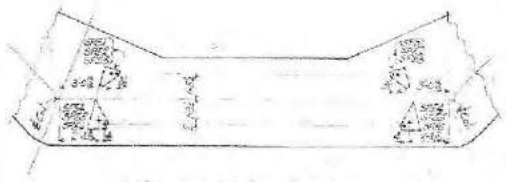

Butt Section of Octagonal Girder showing Location of Shims for Erection Stay-parts

	List of Drawings
E1	Erection Diag
1 to 2	Columns
3	"
4	Bracing
5	"
6	"
7	"
8	Erection Post
C1	Field Rivets
C2	" Bolts
EP1 to 5	Erectors List Rivets

NOTE to ERECTOR:

Place K26, K26L, K32 before placing Struts – K5 – at 3rd level.

Before connecting with erection of Octagonal Girders, bolt 1-Erection Support ES1 to seat pl. at top of C1, C2 and 1-ES2 to C4, C5. First remove Bolts K26 from front pl. (Bending Support Tower) be bolted to above before erection of Cols.

Vary in thickness of plates as in fitting of Octagonal Girders. From the drawings and material list obtain any thickness of shims required in pockets. The cover of Octagonal Girder by Erection Support, add to your thickness of Shims ES1, ES2 to C4 to C8 to fit snug and tight before erection. Gen other Bolts for assembling Erection Supports and Shims are to remain in place until Radial Cross and Diag. of Octagonal Girders at joints of second from side, are bolted in place.

Erection of erecting of Octagonal Girders similar to erection outlined above.

After Erection Struts have been removed, Bolts and are to be replaced on Cols and holes reamed to size.

Holes in Bolts on Cols for connection of Erection Struts are to be plugged with rivets after use.

PW 36408

NAVY DEPARTMENT
Bureau of Yards and Docks
Hammerhead Cranes
H2221 - Brooklyn Navy Yard
H2231 - Norfolk Navy Yard

AMERICAN BRIDGE COMPANY

DRAWINGS MADE AT Ambridge PLANT
WORK FABRICATED AT Ambridge PLANT
IN CHARGE OF T. Gibson
DRAW. MADE BY [illegible] DATE 5/17/39
DRAW. CHECKED BY TH DATE [illegible]

ORDER No. H2221 H2231
SHEET No. E1

117480
HA110
PW 36408

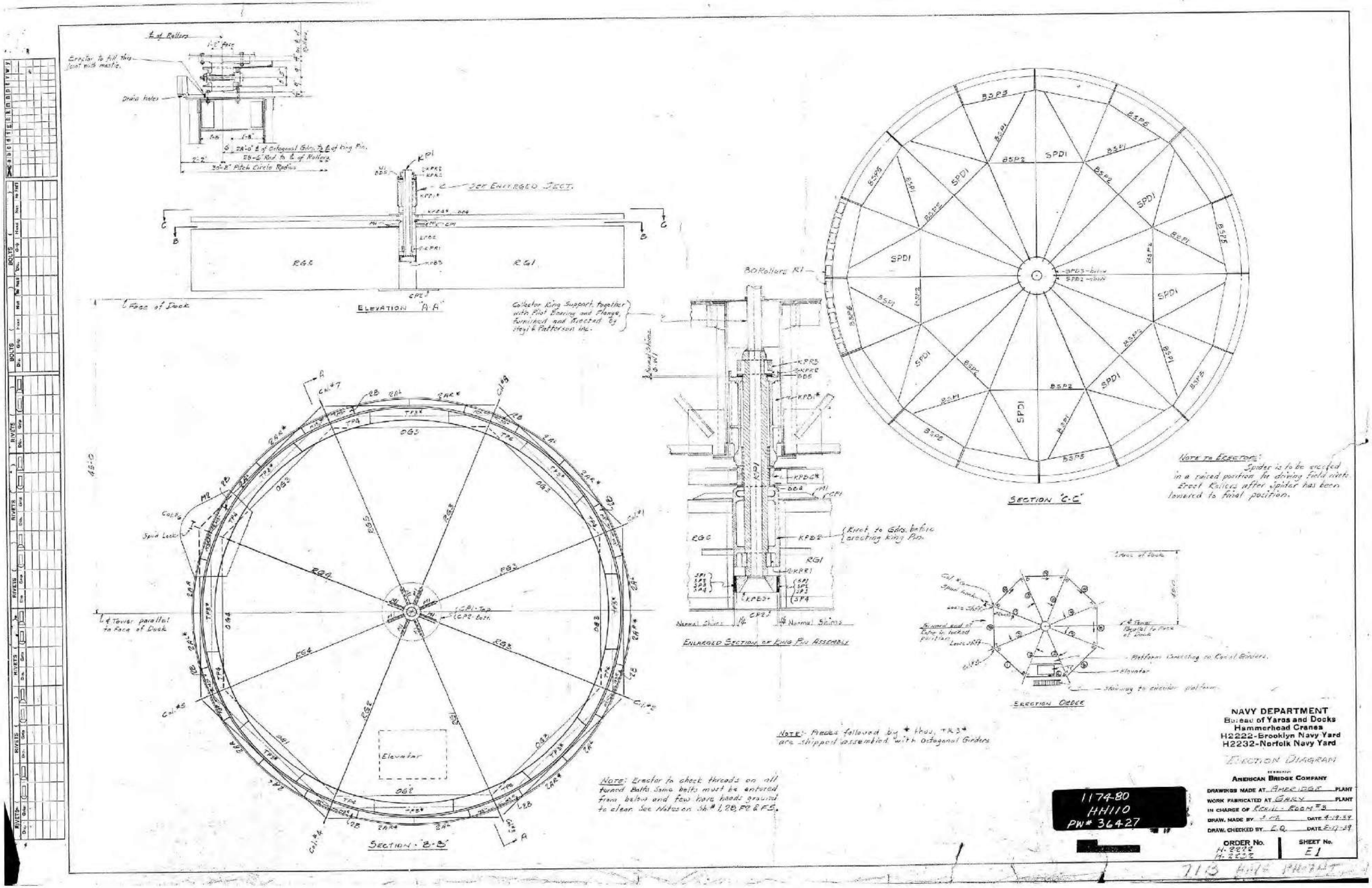
Erector to fill this joint with mastic.
Drain holes
Face of Dock
ELEVATION "A-A"
SECTION "C-C"
SECTION "B-B"
Elevator
Spud Lock
Tower parallel to Face of Dock
ENLARGED SECTION OF KING PIN ASSEMBLY
Collector Ring Support, together with Pilot Bearing and Flange, furnished and Erected by Heyl & Patterson Inc.
80 Rollers R1
Note to Erector:
Spider is to be erected in a raised position for driving field rivets. Erect Rollers after Spider has been lowered to final position.
Note: Erector to check threads on all turned Bolts. Some bolts must be entered from below and few have heads grained to clear. See Notes on Sh. # 1, 28, F8 & F5.
Note: Pieces followed by * thus, TR3* are shipped assembled with Octagonal Girders.
ERECTION ORDER
Platform Connecting to Canal Girders.
Elevator
Stairway to elevator platform
NAVY DEPARTMENT
Bureau of Yards and Docks
Hammerhead Cranes
H2222-Brooklyn Navy Yard
H2232-Norfolk Navy Yard
ERECTION DIAGRAM
AMERICAN BRIDGE COMPANY
DRAWINGS MADE AT AMERIDGE PLANT
WORK FABRICATED AT GARY PLANT
IN CHARGE OF RECIL - ROOM #3
DRAW. MADE BY J.M. DATE 4-19-39
DRAW. CHECKED BY E.Q. DATE 5-17-39
ORDER No. H-2232
SHEET No. E1
1174-80
HH110
PW# 36427

ATTACHMENT 7
Tower to Foundation Interface Loads

ATTACHMENT

Table of Contents

Attachment 7 – Tower to Foundation Interface Loads
- 7-1 – Tower Loads to the Foundation
- 7-2 – Re-Orientation of Loads for Analysis of Foundation

7-1
Tower Loads to the Foundation

7-1 – Tower Loads to the Foundation

Loads are passed to the foundation at the eight column bases shown below. Column bases were treated as pinned, so no moments were transmitted to the foundation. Six load types and directions generated significant loads, and are represented in the tables in the next page. Those load types are Dead Load (DL), Wind Load in the X-Direction (WL-X) and Z-Direction (WL-Z), and Earthquake Loads in the X-Direction (EL-X), Y-Direction (EL-Y), and Z-Direction (WL-Z).

Reactions were approximately equal and opposite in the negative directions, so only reactions to positive-direction loads are shown here. Reactions shown on the next page correspond to those used in Attachment 6-2 to evaluate the column anchor bolts and base plates.

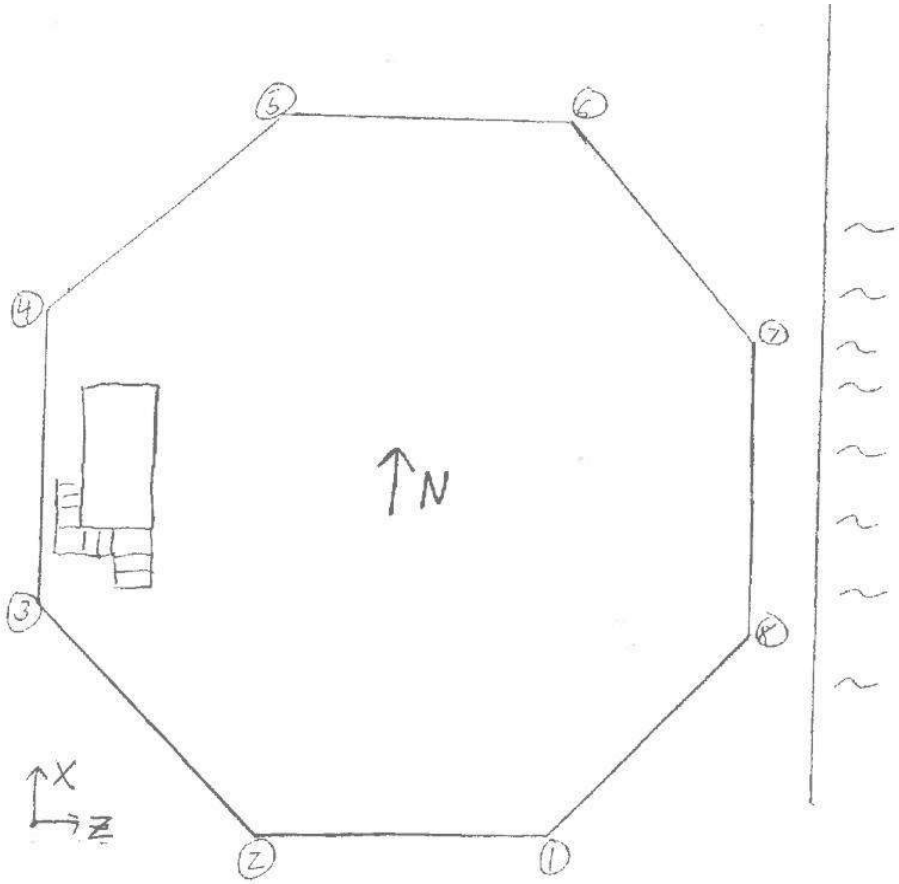

Figure 7-1: Orientation of Column Bases

Pinned Base Column Loads at Hammerhead
Crane Under Various Loading Conditions
Reactions for Single Load Types

Dead and Wind Loads

	DL		
Col	RX (kips)	RY (kips)	RZ (kips)
C1	15.31	918.53	-3.07
C2	15.43	918.59	2.10
C3	-0.30	716.21	3.28
C4	-1.79	426.95	-0.74
C5	-12.16	223.42	0.26
C6	-10.94	218.59	-2.51
C7	-2.26	422.60	0.26
C8	-3.30	702.03	0.42

	WL-X		
Col	RX (kips)	RY (kips)	RZ (kips)
C1	-30.47	-209.67	3.70
C2	-29.96	-221.21	-3.66
C3	-15.71	-85.79	0.72
C4	-15.18	85.91	-0.70
C5	-29.10	221.07	3.72
C6	-29.97	209.63	-3.76
C7	-15.04	101.29	0.23
C8	-15.33	-101.23	-0.25

	WL-Z		
Col	RX (kips)	RY (kips)	RZ (kips)
C1	64.69	193.15	-2.11
C2	-7.66	-142.89	8.29
C3	-46.37	-392.08	-43.36
C4	-34.31	-434.17	-122.02
C5	-56.12	-121.54	-75.85
C6	8.87	231.45	-70.42
C7	35.06	280.37	-0.04
C8	35.84	385.72	0.27

Seismic Loads

	EL-X		
Col	RX (kips)	RY (kips)	RZ (kips)
C1	-29.54	-179.79	3.70
C2	-29.17	-191.08	-3.43
C3	-15.72	-73.45	0.73
C4	-15.31	73.49	-0.79
C5	-28.89	191.06	3.57
C6	-29.32	179.76	-3.76
C7	-15.12	88.70	0.21
C8	-15.39	-88.68	-0.22

	EL-Y		
Col	RX (kips)	RY (kips)	RZ (kips)
C1	0.40	39.52	-0.07
C2	0.54	39.95	0.09
C3	0.00	31.90	0.09
C4	-0.08	20.71	-0.07
C5	-0.41	13.07	0.02
C6	-0.23	12.46	-0.05
C7	-0.10	20.52	0.00
C8	-0.11	31.32	0.00

	EL-Z		
Col	RX (kips)	RY (kips)	RZ (kips)
C1	10.85	111.50	-26.12
C2	18.47	-61.87	-25.47
C3	1.42	-208.81	-52.26
C4	8.55	-203.55	-42.75
C5	-9.75	-64.56	-14.42
C6	-20.30	106.45	-17.02
C7	-5.12	167.23	-0.18
C8	-4.12	153.62	-0.24

7-2
Re-Orientation of Loads for Analysis of Foundation

7-2- Re-Orientation of Loads for Analysis of Foundation: Axis Definition

All the loads applied to the foundation due to the crane structure at top of the foundation are provided by STV. The axis convention that STV used in their crane base reaction calculations is as follow:

- Positive X axis is in the North direction;
- Positive Z axis is in the East Direction; and
- Positive Y axis is in the upward direction

In SAP2000, the horizontal plane is defined by X and Y axis, and the vertical axis is defined by Z axis. Positive Z axis is vertically upward. As shown in Figure 7-2 the finite element model of the foundation has been developed in SAP2000 such that:

- Positive X axis is in the East direction;
- Positive Z axis is in the vertically upward direction; and
- Positive Y axis is in the North direction.

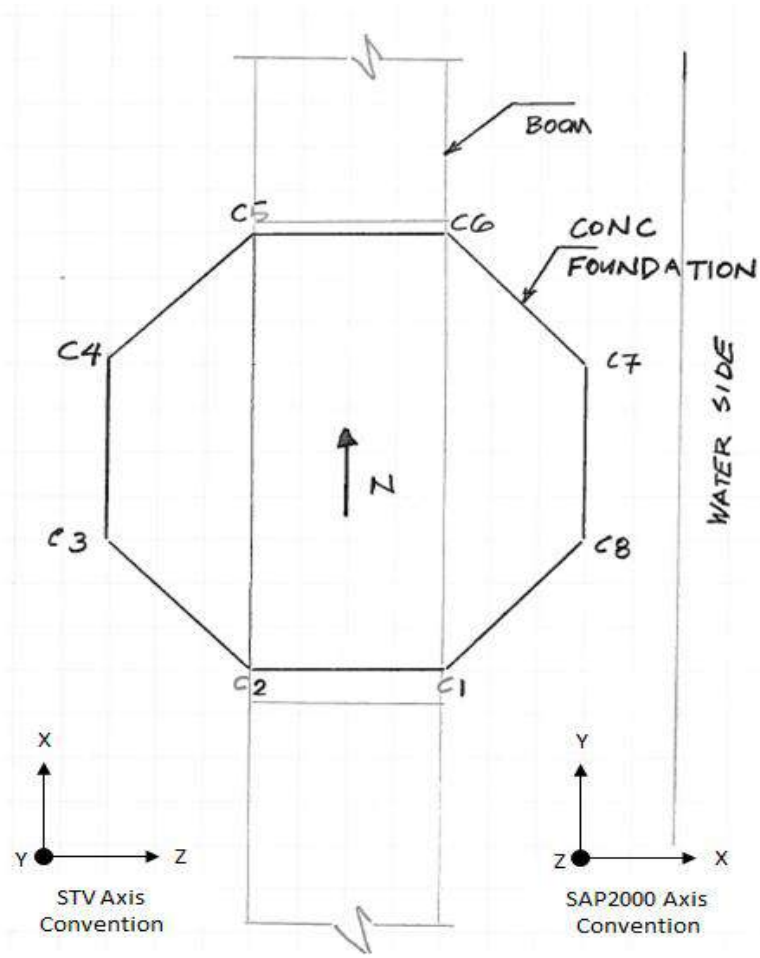

Figure 7-2: Axis Conventions

Therefore, all foundation loads that are provided by STV will be adjusted as per the following table for structural analysis using SAP2000:

Table 7-2: Foundation Reaction Definition

	Reactions			Moments		
STV	RX	RY	RZ	MX	MY	MZ
SAP2000	-RY	-RZ	-RX	-MY	-MZ	-MX

Note that STV provided the foundation reaction loads on the crane column; as a result, the sign of the loads where changed to show the column reaction loads on the foundation.

In Figure 7-2, C1 through C8 are the crane Column Identifications (I.D). All STV provided loads that are included in this report are adjusted as shown in Table 7-2.

ATTACHMENT 8
Foundation

ATTACHMENT

Table of Contents

Attachment 8 – Foundation

- 8-1 – General Foundation Information
  - 8-1-1 – Crane Foundation Description
    - 8-1-1-1 – Concrete Structure
    - 8-1-1-2 – Pile Foundation
  - 8-1-2 – Existing Condition Determination
    - 8-1-2-1 – Concrete
    - 8-1-2-2 – Timber Piles
- 8-2 – Foundation Analysis and Results
  - 8-2-1 – Computer Model
    - 8-2-1-1 – Software
    - 8-2-1-2 – Foundation Modeling for Pile Analysis (Model 1)
      - 8-2-1-2-1 – Concrete Cap
      - 8-2-1-2-2 – Timber Piles
        - 8-2-1-2-2-1 – Axial Stiffness
    - 8-2-1-3 – Foundation Modeling for Concrete Cap Analysis (Model 2)
  - 8-2-2 – Loads
    - 8-2-2-1 – Dead Load
    - 8-2-2-2 – Wind Load
    - 8-2-2-3 – Earthquake Load
  - 8-2-3 – Load Combinations
  - 8-2-4 – Analysis Results
    - 8-2-4-1 – Concrete Cap
    - 8-2-4-2 – Timber Piles
  - 8-2-5 – Conclusion
- 8-3 – Selected Drawings of Existing Foundation
- 8-4 – Foundation Calculation Details
  - 8-4-1 – Design Criteria
    - 8-4-1-1 – Design Codes and References
    - 8-4-1-2 – Material Properties & Other Considerations
    - 8-4-1-3 – Loads
    - 8-4-1-4 – Load Combinations
  - 8-4-2 – Timber Pile Analysis
  - 8-4-3 – Stability Analysis of the Foundation
    - 8-4-3-1 – Foundation Stability
    - 8-4-3-2 – Compression Load on Piles
      - (Assuming Piles have No Tensile Capacity)
  - 8-4-4 – Concrete Cap Analysis
    - 8-4-4-1 – Checking Flexural and Sheer Strength
    - 8-4-4-2 – Checking Bearing Stress under the Columns

8-4-5 – SAP2000 Analysis Output
8-4-5-1 – Pile Forces – 1” Diameter Degradation
8-4-5-2 – Pile Forces – 2” Diameter Degradation
8-4-5-3 – Concrete Cap
8-5 – Foundation Model Using Solid Elements
8-5-1 – Model Geometry
8-5-1-1 – Joint Coordinates
8-5-1-2 – Joint Restraints
8-5-1-3 – Element Connectivity
8-5-2 – Material Properties
8-5-3 – Section Properties
8-5-3-1 – Frames
8-5-3-2 – Areas
8-5-3-3 – Solids
8-5-4 – Load Patterns
8-5-4-1 – Definitions
8-5-5 – Load Cases
8-5-5-1 – Definitions
8-5-5-2 – Static Case Load Assignments
8-5-5-3 – Response Spectrum Case Load Assignments
8-5-6 – Load Combinations
8-5-7 – Material Take-Off
8-5-8 – Design Preferences
8-5-8-1 – Steel Design
8-5-8-2 – Concrete Design
8-5-8-3 – Aluminum Design
8-5-8-4 – Cold Formed Design
8-6 – Foundation Model Used for Capping Beam Analysis
8-6-1 – Model Geometry
8-6-1-1 – Joint Coordinates
8-6-1-2 – Joint Restraints
8-6-1-3 – Element Connectivity
8-6-2 – Material Properties
8-6-2-1 – Section Properties

8-6-3 – Load Patterns
8-6-3-1 – Definitions
8-6-4 – Load Cases
8-6-4-1 – Definitions
8-6-4-2 – Static Case Load Assignments
8-6-4-3 – Response Spectrum Case Load Assignments
8-6-5 – Load Combinations
8-6-6 – Material Take-Off
8-6-7 – Design Preferences
8-6-7-1 – Steel Design

8-6-7-2 – Concrete Design
8-6-7-3 – Aluminum Design
8-6-7-4 – Cold Framed Design

8-1
General Foundation Information

8.1- General Foundation Information

8.1.1- Crane Foundation Description

8.1.1.1- Concrete Structure

The crane foundation consists of an octagonal bowl shape reinforced concrete slab supported on timber piles. Figure 8.1 shows the crane foundation plan view. Figure 8.5 shows a section cut of the foundation through the center line of it in the East-West direction (looking north).

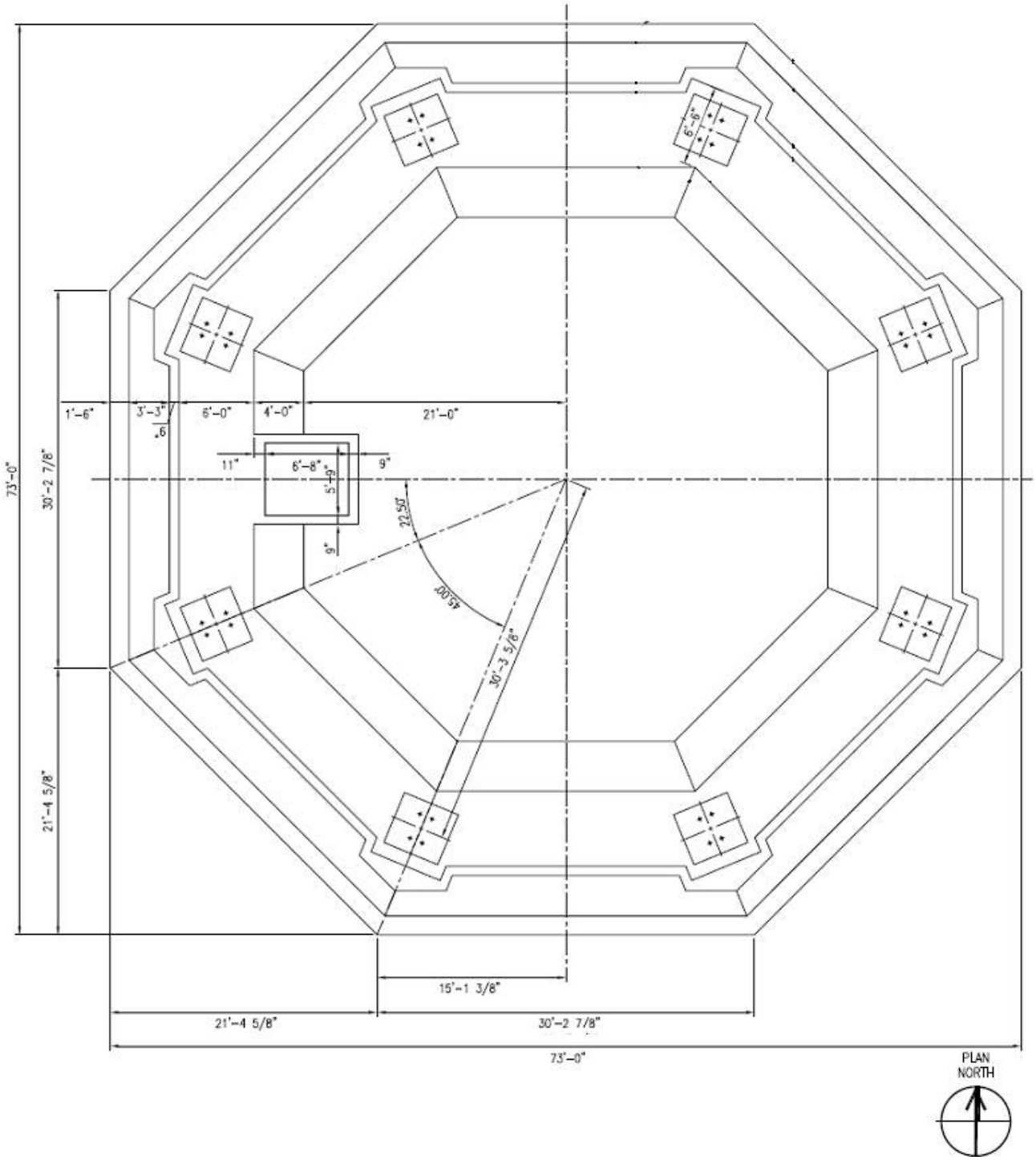

Figure 8.1 - Crane Foundation Plan

Each crane column is connected to the concrete foundation cap by a 4’-4” by 4’-8” steel base plate and four anchor bolts as shown in Figure 8.2.

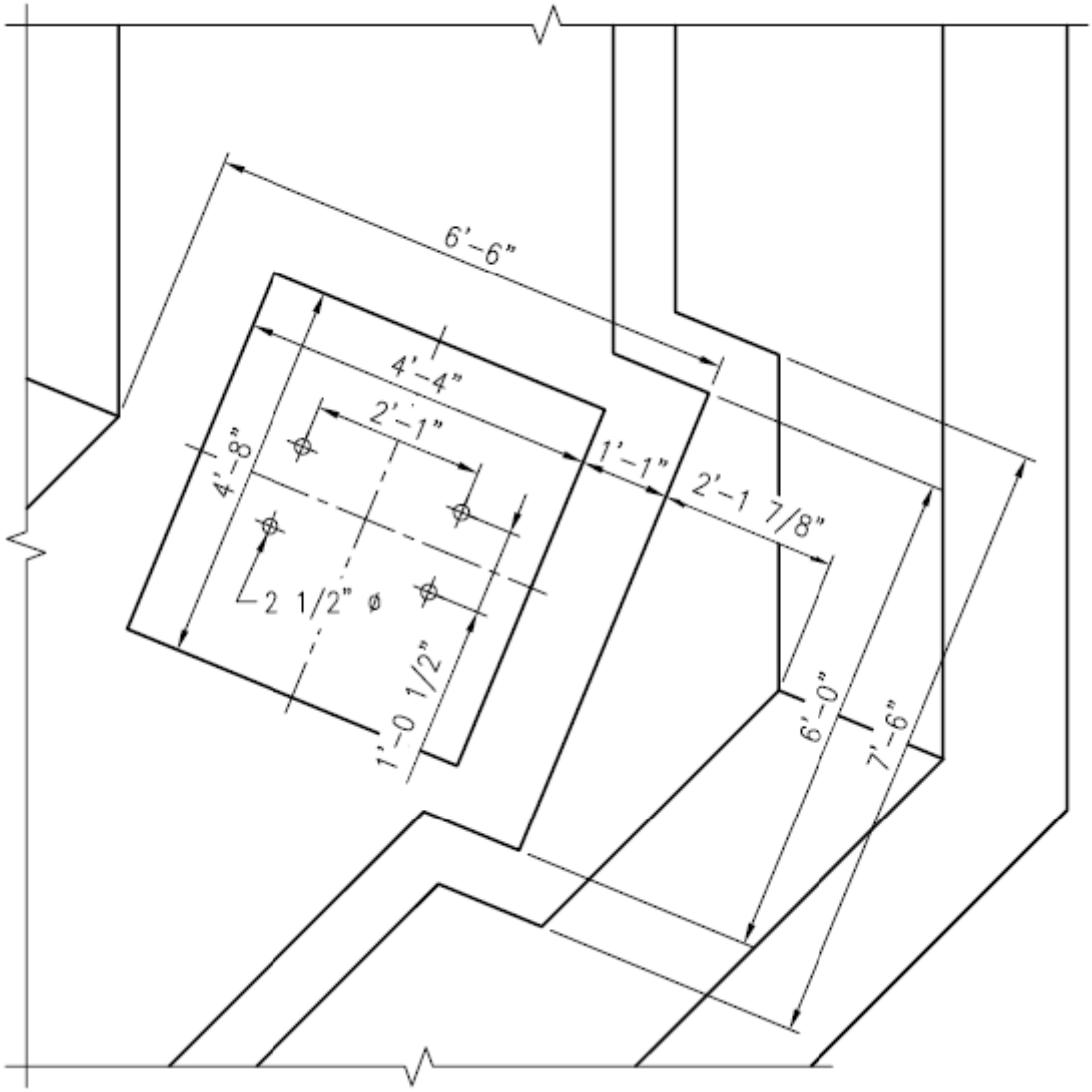

Figure 8.2 - Crane Columns to Concrete Slab Connection Details

The crane foundation reinforcement details are shown in Figure 8.3. These details are drawn based on the as-built drawing "Y & D Drawing No. 131,389 (refer to Attachment 8.3).

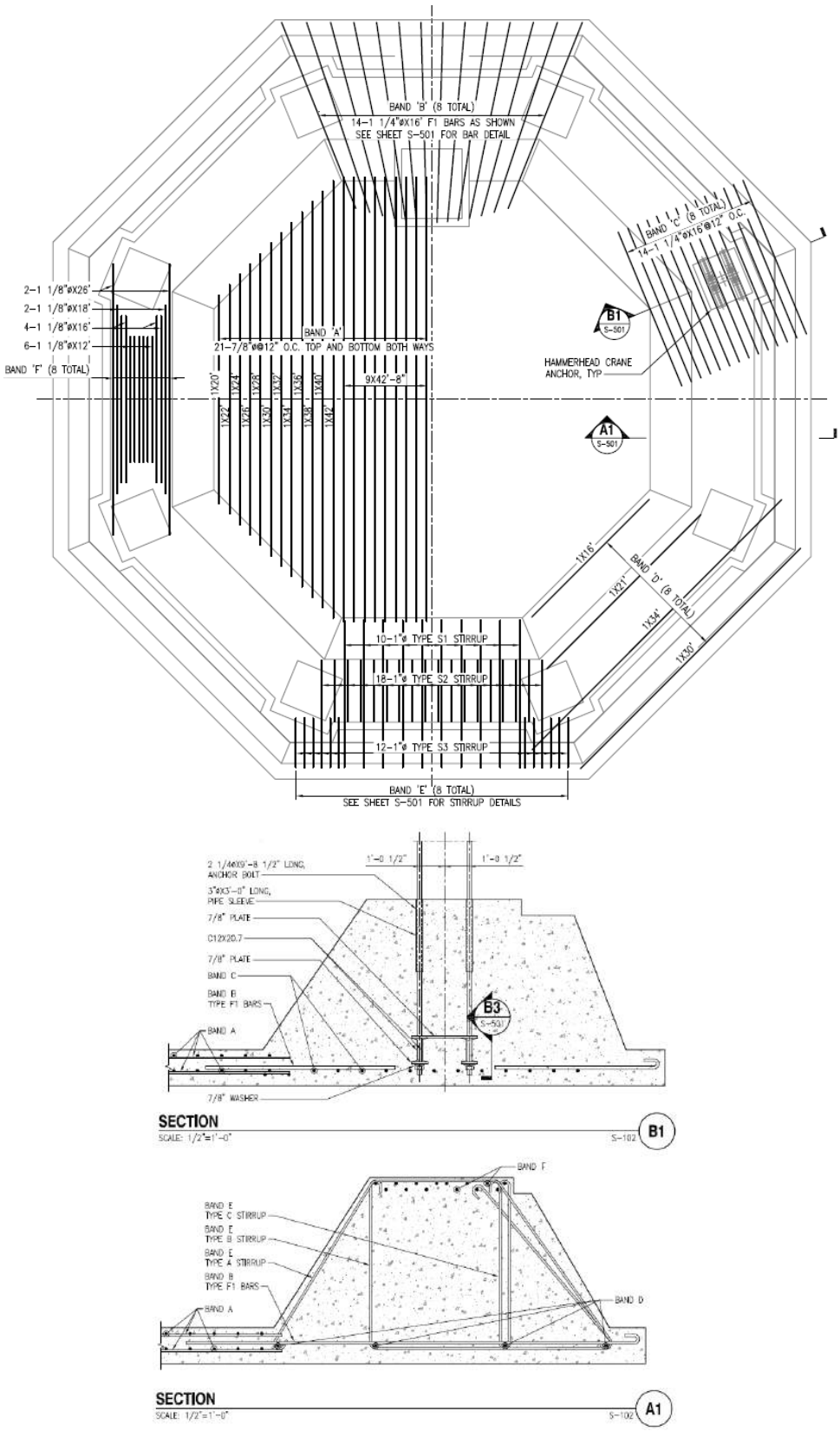

Figure 8.3 - Crane Foundation Reinforcement Details

8.1.1.2- Pile Foundation

The concrete crane foundation is supported on a group of 12” diameter plumb and batter timber piles. In lack of detailed field investigation to determine the timber species, it is assumed that the timber species is ‘Southern Pine’ which is the most common species found in the East Coast of the United States. Figure 8.4 shows the crane foundation pile plan. Figure 8.5 shows a section cut of the foundation through the center line of it in the East-West direction (looking north).

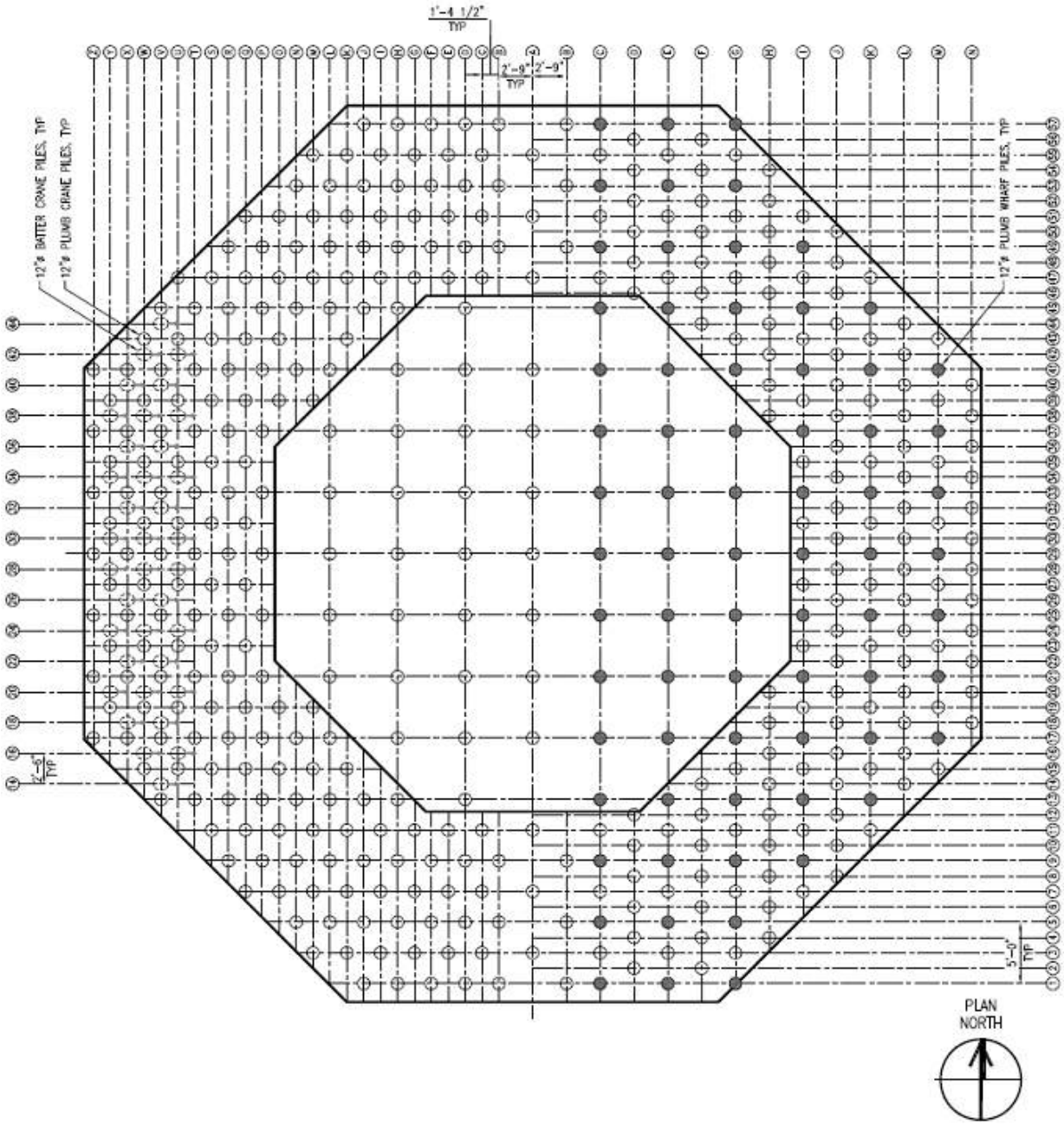

Figure 8.4 - Crane Foundation Pile Plan

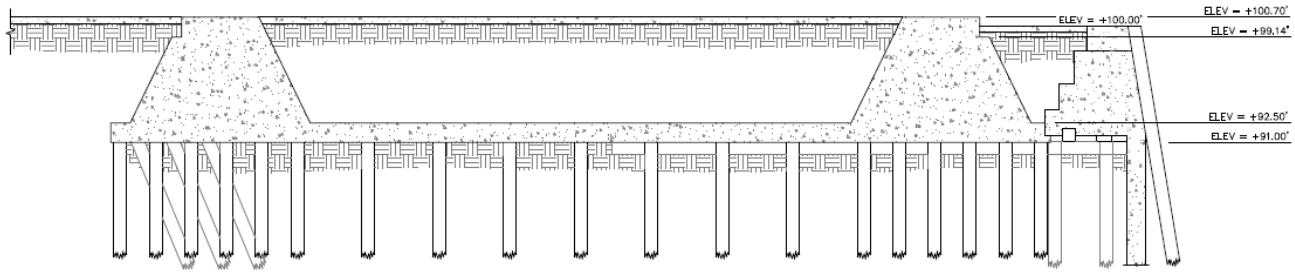

Figure 8.5 - Crane Foundation Section (Looking North)

As shown in Figure 8.4, the foundation is supported on total of 491 piles. There are total of 36 batter piles which are all located at the West side of the foundation. Also, on the East side, the crane foundation shares some piles with the existing wharf. These piles were driven before the crane foundation construction to support the wharf. During the crane foundation construction, the existing wharf piles that were interfering with the crane foundation where either driven down or cut off to reach the foundation piles cutoff elevations.

8.1.2- Existing Condition Determination

Since full site investigation (test pits and geotechnical exploration) was outside the scope of this study, this analysis relied on the following:

- A visual inspection of the existing foundation structure as visible from the existing surface.
- The available record drawings of the structure
- Original pile test record (P.W. Drawing No. 21687) for the pile geotechnical capacity determination, and
- Engineering experience and judgment

The following existing condition and associated assumptions are used for purpose of foundation analysis.

8.1.2.1- Concrete

On November 8, 2012 M&N completed a visual inspection of the concrete foundation cap. No apparent sign of concrete foundation distress was recorded. As a result, the foundation analysis assumed that the structural material properties and strength of the concrete are not degraded from the time the foundation was built. Figure 8.6 shows a typical condition of the pedestals at the crane column base.

Figure 8.6 - Visible Foundation Pedestal at a Crane Column Base (Typical)

8.1.2.2- Timber Piles

The existing timber piles for the foundation were not visually inspected because they are enclosed by the wharf and embedded in soil.

As shown in Figure 8.7 below, which is taken from record Drawing Number P.W. 20704, dated May 19, 1944, the existing wharf supporting the Hammerhead Crane foundation is a closed wharf type structure. As seen in the section, the elevation of the bottom of the cap is 92.50' (NNSY datum). The elevation of the MLLW at NNSY is 93.29' (NNSY Datum). Given the above, the following conclusions can be made:

- All timber foundation piles are more or less entirely below MLLW, and
- Given that the wharf is closed faced, the piles are fully buried in soil.

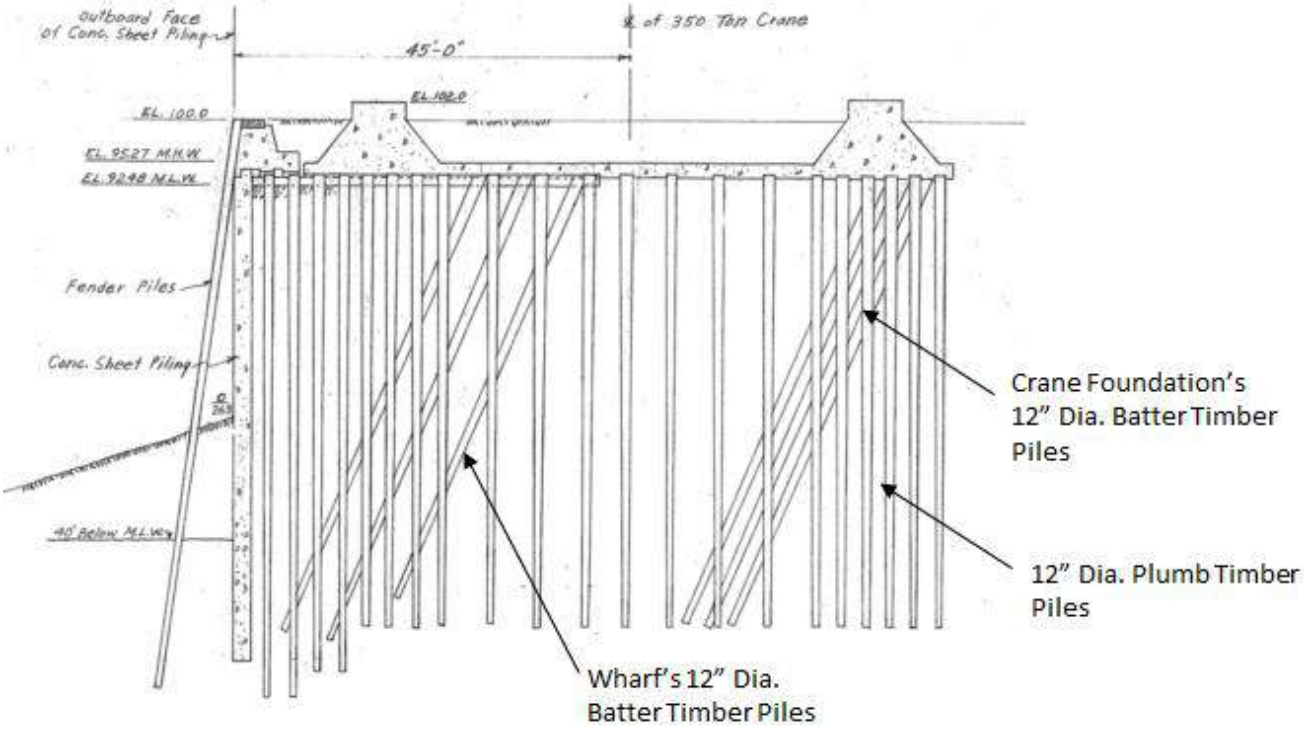

Figure 8.7 - Crane Foundation Section (Looking South)

Since the timber piles are embedded into the ground, it is likely that the piles are in relatively good shape without much time dependent degradation. Also, based on M&N experience from inspecting waterfront timber structures in the past, timber piles under similar environmental and exposure conditions do not suffer excessive degradation. Therefore, given the age of the structure, exposure and environmental conditions, and based on past experience, a radial degradation of timber piles of ½" all around is conservatively assumed for the foundation pile strength analysis. However, a radial degradation of 1" is also considered for the purpose of sensitivity check.

Based on P.W. Drawing No. 19209, the allowable pile geotechnical capacity of 20 tons has been used for the study.

8-2
Foundation Analysis and Results

8.2- Foundation Analysis and Results

8.2.1- Computer Model

8.2.1.1- Software

SAP2000 has been used for the foundation analysis.

8.2.1.2- Foundation Modeling for Pile Analysis (Model 1)

A complete 3-dimensional finite element model of the existing foundation was developed using the SAP2000 structural analysis program. Several Screen shots of the model are shown in Figure 8.8 through Figure 8.13.

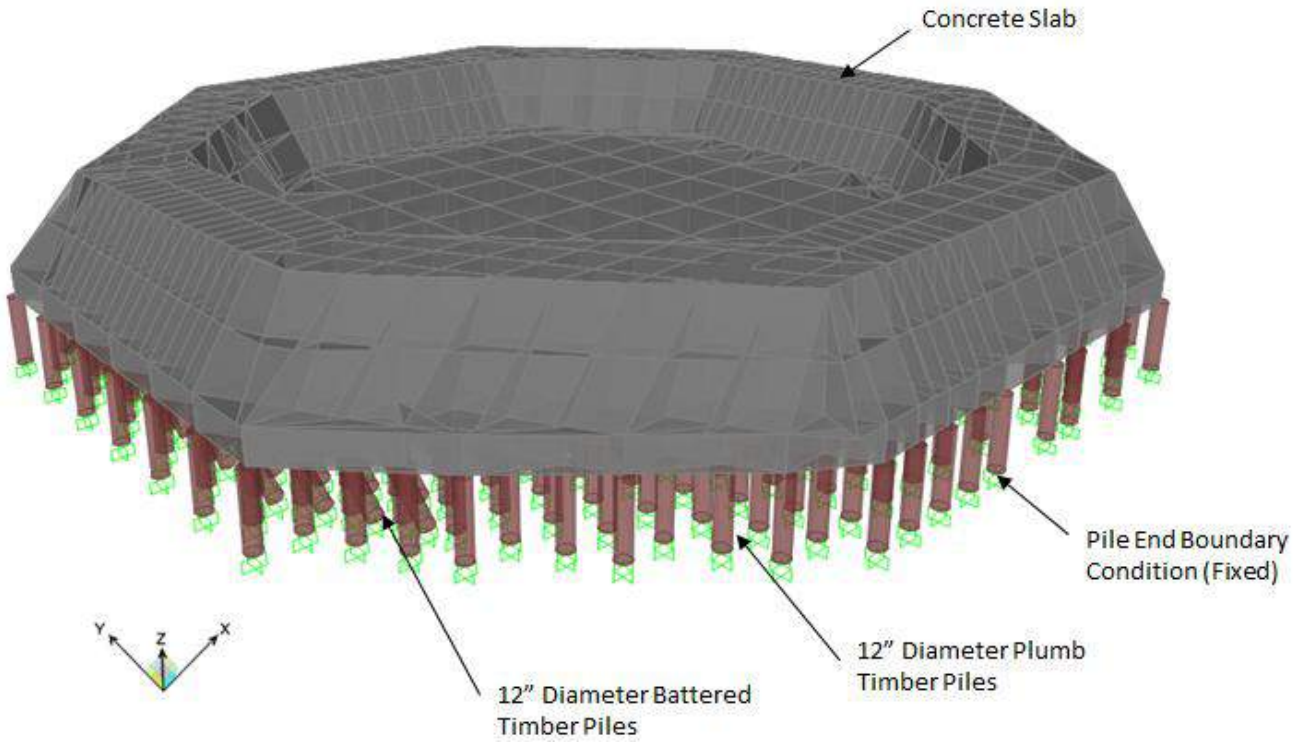

Figure 8.8 - 3-D View of the Foundation Model in SAP2000

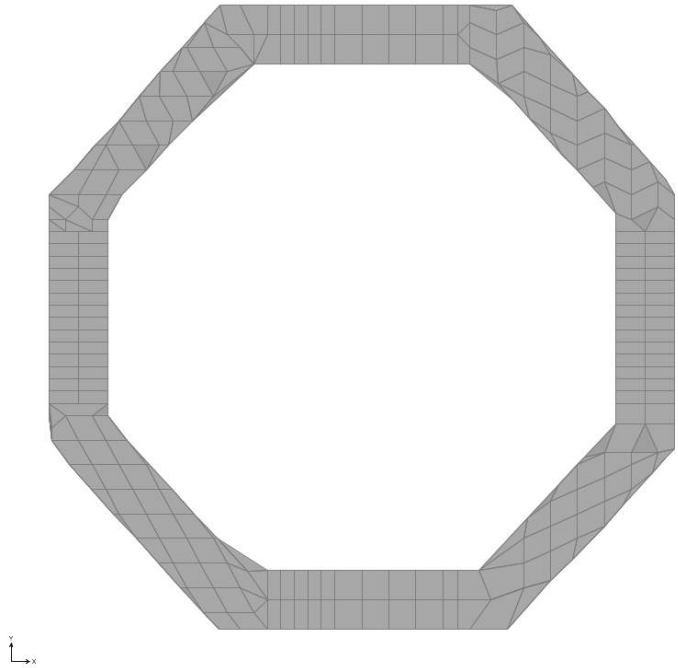

Figure 8.9 - Plan View of the Foundation Model - Showing Top of Concrete Cap

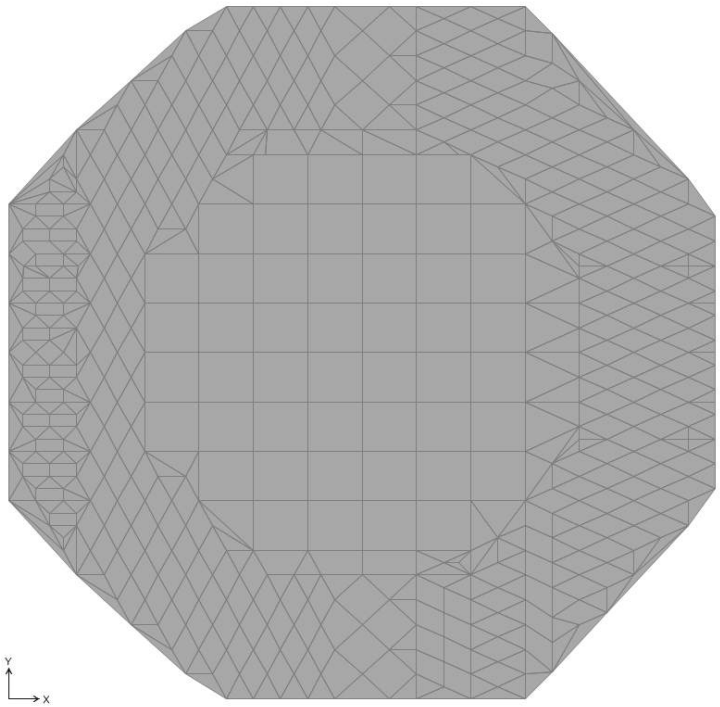

Figure 8.10 - Plan View of the Foundation Model - Showing Bottom of the Concrete Cap (Existing Timber Platform)

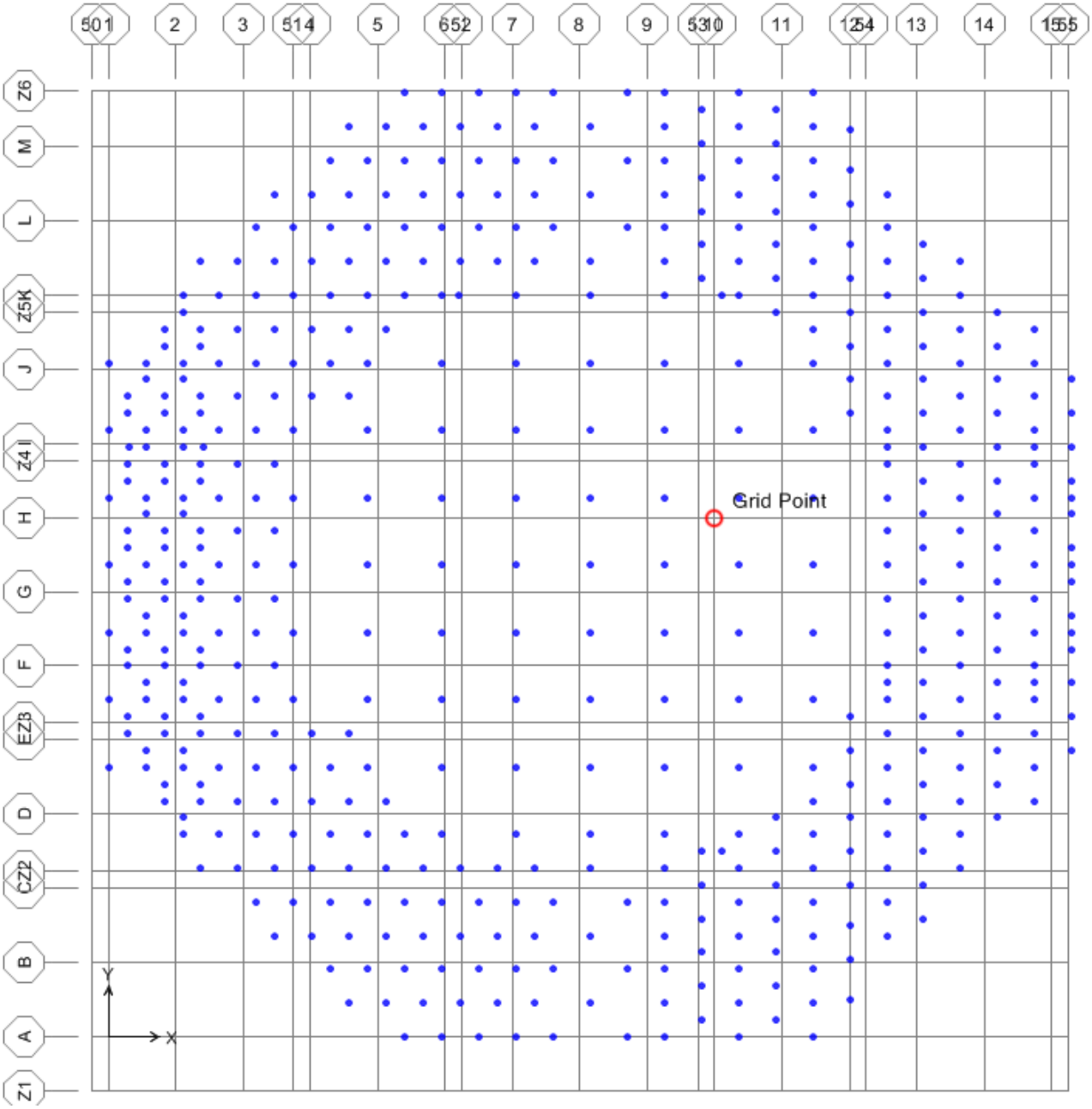

Figure 8.11 - Plan View of the Foundation Model - Showing Locations of Timber Foundation Piles

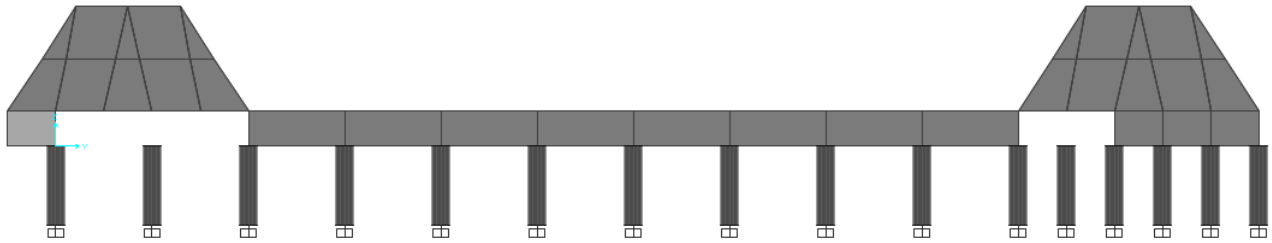

Figure 8.12 - Typical Cross Section through the Foundation Model

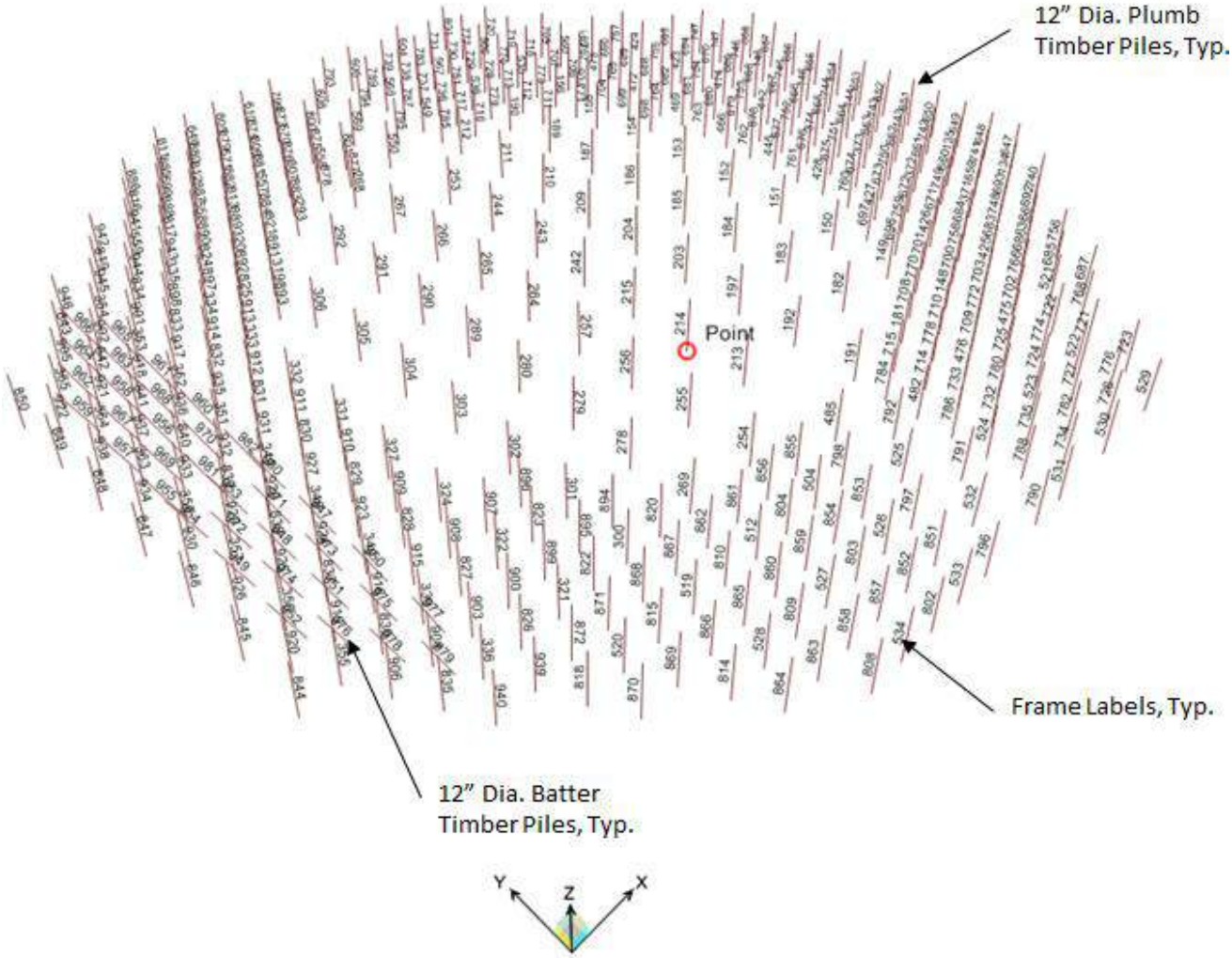

Figure 8.13 - 3D View of Foundation Model - Showing Only the Timber Pile Layout & Frame Labels

8.2.1.2.1- Concrete Cap

The existing concrete cap has been modeled using 3-D solid elements.

Solids are eight-node objects used to model 3-D structural systems. Each solid has six quadrilateral faces with a joint at each corner. Nodes may be collapsed to form wedges, tetrahedral, and other irregular volumes. Material, temperature-dependent, and anisotropic properties can be assigned, and gravity loads, surface pressures, pore pressures, and thermal loads can be applied to the solid elements. Aspect ratios of the solid elements are recommended to be less than four for best results.

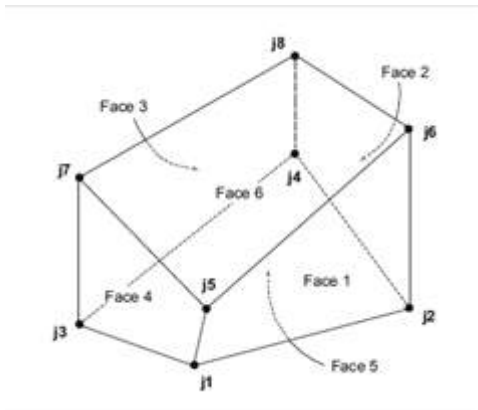

Figure 8.14 - SAP2000 - Typical 3-D Solid Element

Figure 8.15 shows a typical partial cross section of the concrete cap that has been modeled in the SAP2000 model.

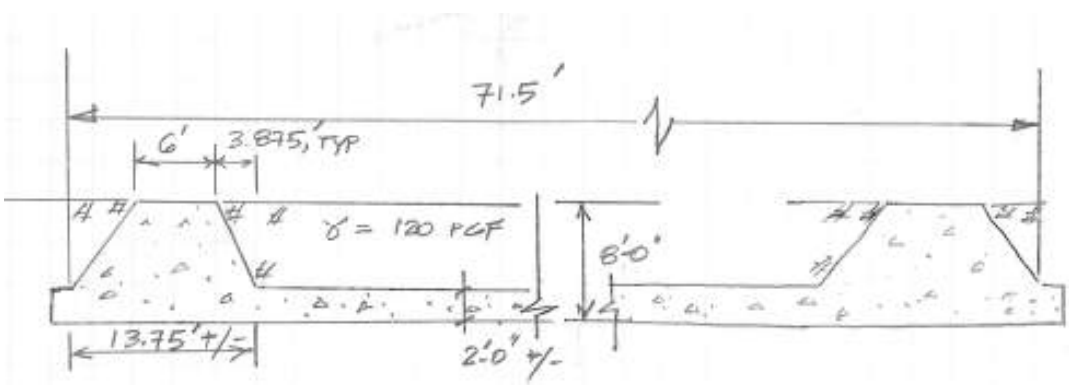

Figure 8.15 - Typical Concrete Cap Dimensions used in SAP2000

8.2.1.2.2- Timber Piles

The existing drawings show that the piles supporting the concrete foundation are 12” diameter timber piles. Figure 8.11 shows the layout of existing crane foundation piles.

Foundation timber piles have been modeled in the SAP2000 with three dimensional frame elements. Top of the piles in the model are connected to the bottom of the concrete cap with moment free joint connection having only translational degrees of freedom. The existing drawings of the foundation show that the piles penetrate only 6” into the concrete cap. A moment free connection between piles and concrete cap conservatively idealizes the existing detail for finite element analysis of the structure. Bottoms of the piles have been assumed to have fixed support connection with all degrees of freedom restrained.

As specified in Table 6A of NDS 2005, the reference Modulus of Elasticity, Emin = 790,000 psi has been used for the timber piles. Also, in accordance with Section 11.3.2A of NDS, 2005, Specific Gravity and Unit Weight of the Southern Pine timber species are 0.55 and 34.32 pcf, respectively. These properties have been used for modeling the piles.

8.2.1.2.2.1. Axial Stiffness

Given the lack of geotechnical investigation at the site, the requirements of Section 10.7.3.13.4 of AASHTO LRFD 5th Edition have been used to determine the unsupported length of piles in the model. Using these requirements, pile unsupported length of 4.5’ has been calculated per the following calculations:

IN LACK OF GEOTECHNICAL INVESTIGATION, USE PROVISIONS OF AASHTO LRFD 5TH ED, SECTION 10.7.3.13.4

$$= 1.4\left[E_p I_w / E_s\right]^{0.25}$$ FOR CLAYS, USED FROM PAST EXPERIENCE REGARDING SOIL PROPERTIES AT NNSY.

$E_p = 790$ KSI

$E_s = 0.465\, S_u = 0.465 \times 1.0\,(\text{KSF})$
$= 0.465$ KSI

$I_w =$ MOMENT OF INERTIA OF PILE
$= \frac{\pi}{64} D^4 = \frac{\pi}{64} \times 1^4 = 0.049$ FT^4

$$= 1.4\left[\frac{790 \times 0.049}{0.465}\right]^{0.25} = \underline{\underline{4.22'}}$$ USE $\approx 4.5'$

Where:

EP = modulus of elasticity of pile
Es = Soil modulus for clay = 0.465 Su
Su = Undrained Shear Strength of Clay
lw = weak axis moment of inertia for pile

Axial stiffness of the piles for application in the model was developed based on the original pile test information that was found in the record drawings P.E. Drawing Number 21687.

As per P.W. Drawing No. 21687, two sets of pile tests were performed. One set of tests were performed on a group of four piles and another set was a single pile test. Analyzing the results of these tests, the following pile spring properties were developed:

Total Applied Load (Lbs)	4-Pile Test Pile Head Elev (ft)-Station 1	2	3	4	Ave Elv (ft)	Δ (in)	Elastic Shortening (in)	Load Per Pile (Lbs)
2300	100.328	100.314	100.319	100.326	100.32175		0	575
2300	100.327	100.314	100.321	100.326	100.322	0		
60000	100.327	100.314	100.316	100.323	100.32	0.024	0.024	15000
60000	100.324	100.312	100.311	100.319	100.3165	0.042		
120000	100.319	100.307	100.31	100.315	100.31275	0.045	0.027	30000
120000	100.32	100.308	100.307	100.314	100.31225	0.006		
160000	100.317	100.309	100.308	100.313	100.31175	0.006	0.027	40000
160000	100.318	100.307	100.306	100.314	100.31125	0.006		
200000	100.316	100.302	100.304	100.308	100.3075	0.045	0.066	50000
200000	100.316	100.303	100.304	100.31	100.30825	-0.009		
240000	100.311	100.303	100.303	100.306	100.30575	0.03	0.105	60000
240000	100.312	100.296	100.299	100.306	100.30325	0.03		
280000	100.305	100.295	100.292	100.3	100.298	0.063	0.138	70000
280000	100.307	100.293	100.291	100.301	100.298	1.7053E-13		
320000	100.302	100.291	100.291	100.297	100.29525	0.033	0.171	80000
320000	100.302	100.29	100.289	100.297	100.2945	0.009		

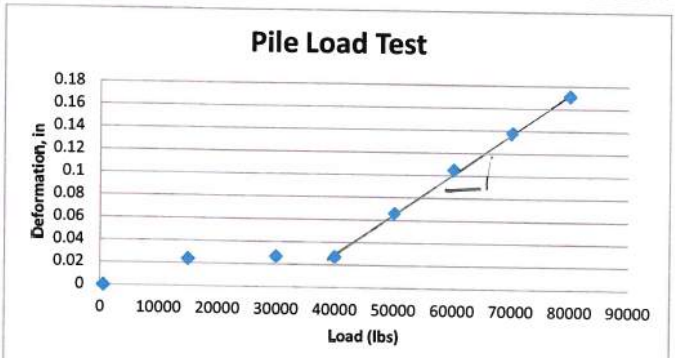

PILE AXIAL STIFFNESS
= SLOPE OF LINE
= (80,000 − 40,000)/(0.171 − 0.027)
= 277.78 KIPS/IN

Total Applied Load (Lbs)	Elevation on Test Pile (New) No. 2-Single Test 1	2	3	4	Ave Elv (ft)	Δ (in)
2000	102.478	102.489	102.507	102.492	102.4915	0
15000	102.471	102.483	102.505	102.486	102.48625	0.063
30000	102.464	102.477	102.503	102.483	102.48175	0.117
40000	102.459	102.474	102.502	102.475	102.4775	0.168
40000	102.447	102.465	102.497	102.47	102.46975	0.261
40000	102.445	102.463	102.493	102.465	102.4665	0.3

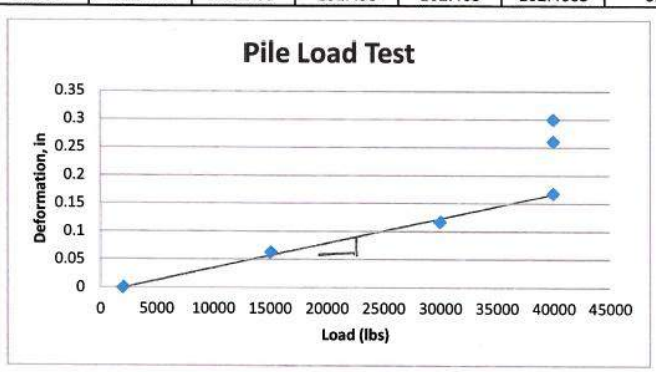

PILE AXIAL STIFFNESS
= SLOPE OF LINE
= (40,000 − 15000)/(0.168 − 0.063) = 238 KIPS/IN

The average stiffness value of 258 kips/in of the above two axial stiffness (278 kips/in and 238kips/in) was used in the computer model.

SAP2000 calculates axial stiffness of a frame element using the (EA)/L formula.

Where,

E = Modulus of Elasticity = 790 ksi

A = Area of 12” Diameter Pile = 113 in2

L = Unsupported Length of Pile = 4.5‘(or 4.22’ exactly)

Using the formula above, SAP2000 should calculate an axial stiffness value of 1763 kips/in for the piles. This is significantly larger than 258 kips/in. Therefore, in order to account for correct stiffness, the area of the pile is modified using the modifier of 258/1763 = 0.146. This modifier should not affect any other stiffness properties of the pile, as flexural stiffness is a function of E and Moment of Inertia (I) and torsional stiffness is a function of Shear Modulus of Elasticity (G) and Polar Moment of Inertia (J).

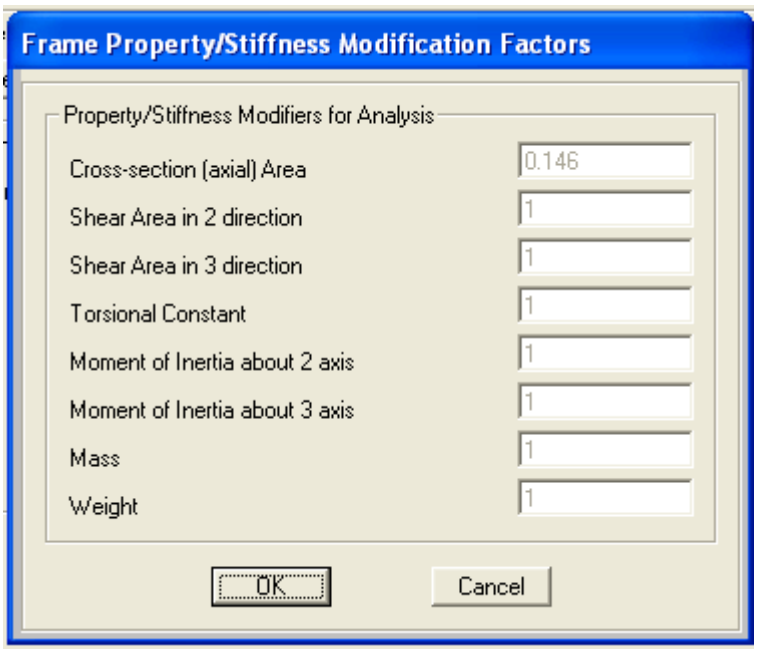

Figure 8.16 - Timber Pile Cross Sectional Area Modifier in SAP2000

8.2.1.3- Foundation Modeling for Concrete Cap Analysis (Model 2)

Since the piles are spaced closed to each other, the concrete cap is analyzed as a "beam on elastic foundation" using the piles axial stiffness (see Section 0) as spring constants. A 3-dimensional SAP2000 model of the foundation was developed using frame elements and linear springs to represent the concrete cap and piles, respectively. Several Screen shots of the model are shown in Figure 8.17 to Figure 8.19.

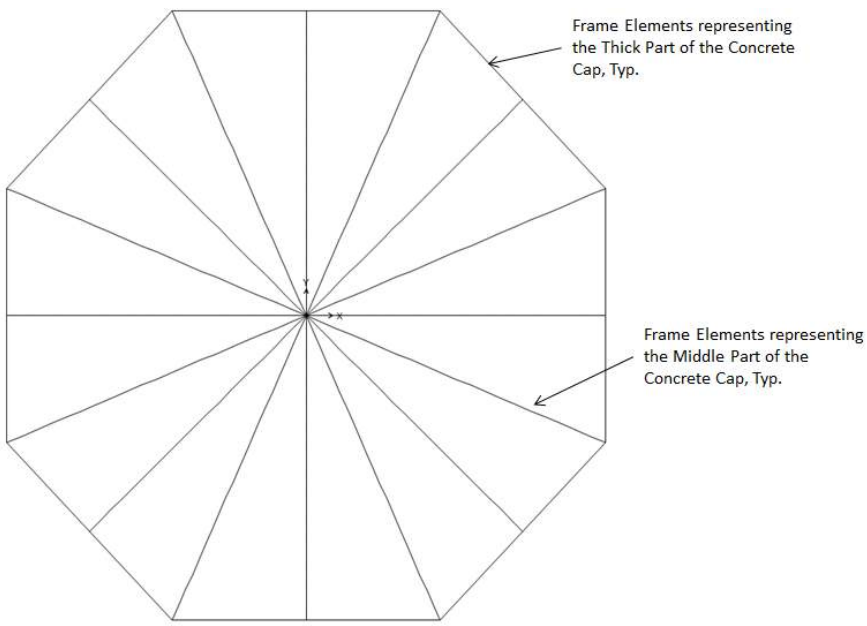

Figure 8.17 - Plan View of the Foundation Model used for Concrete Cap Analysis

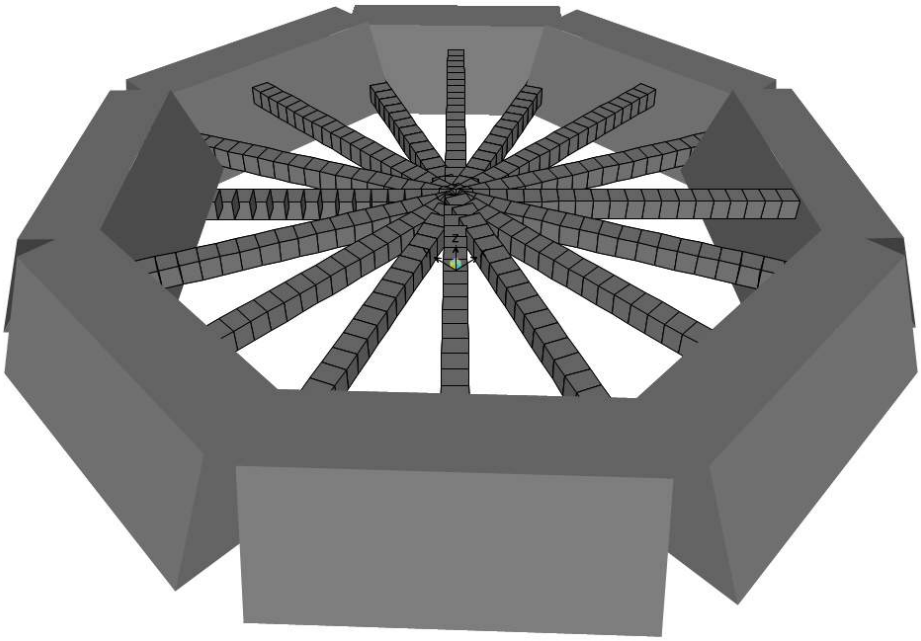

Figure 8.18 - 3-D Extrude View of the Foundation Model used for Concrete Cap Analysis

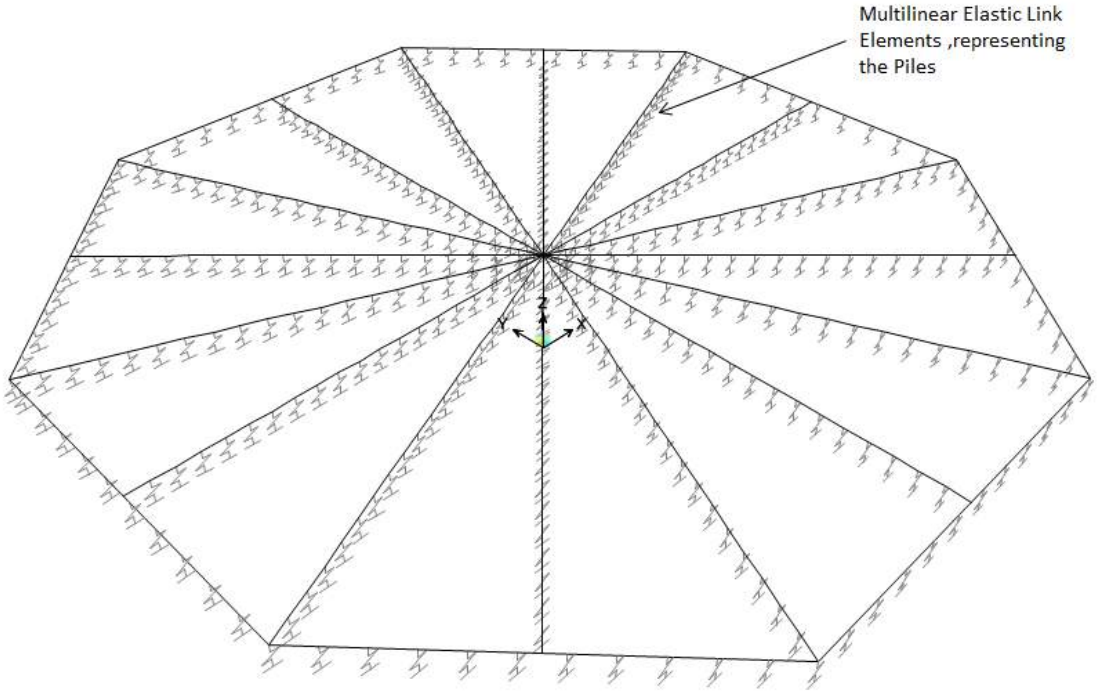

Figure 8.19 - 3-D View of the Foundation Model used for Concrete Cap Analysis

Figure 8.20 shows the cross sectional dimensions of the edge beams that are used to represent the thicker part of the concrete cap. Middle beams are modeled as a 2'x2' concrete frame to represent the middle part of the foundation.

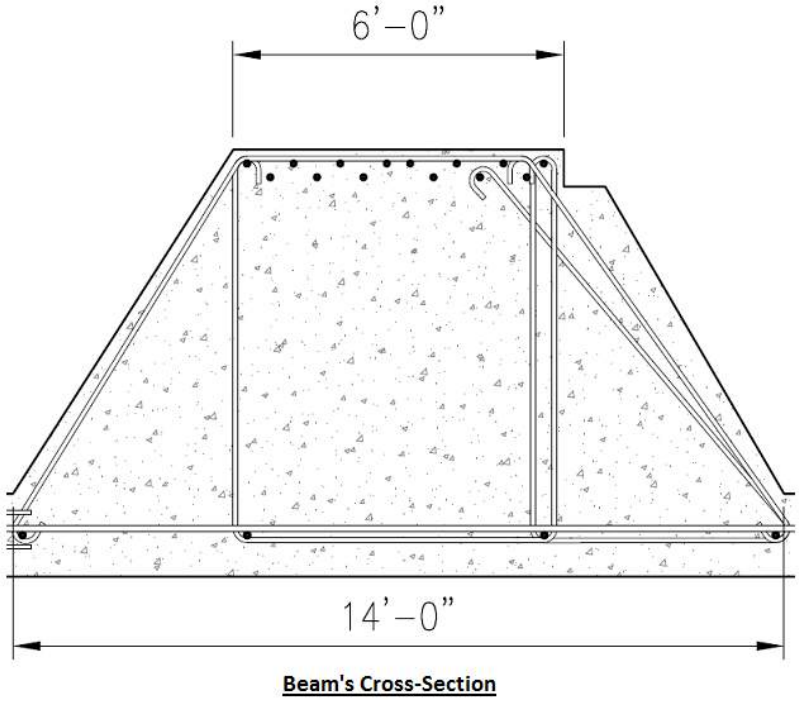

Figure 8.20 - Cross Section of the Beams that are representing the Thicker Part of the Foundation

As it is shown on Figure 8.21, there are minimum of three piles in each rows under the thicker part (edge Beams) of the concrete cap and piles are spaced at 2'-6". As a result, the spring that are used under the edge beams have an axial stiffness of 774 kips/in (= 258 kips/in x 3 piles). Total stiffness of the remaining piles are distributed under the middle beams (= 263 kips/in per srping).

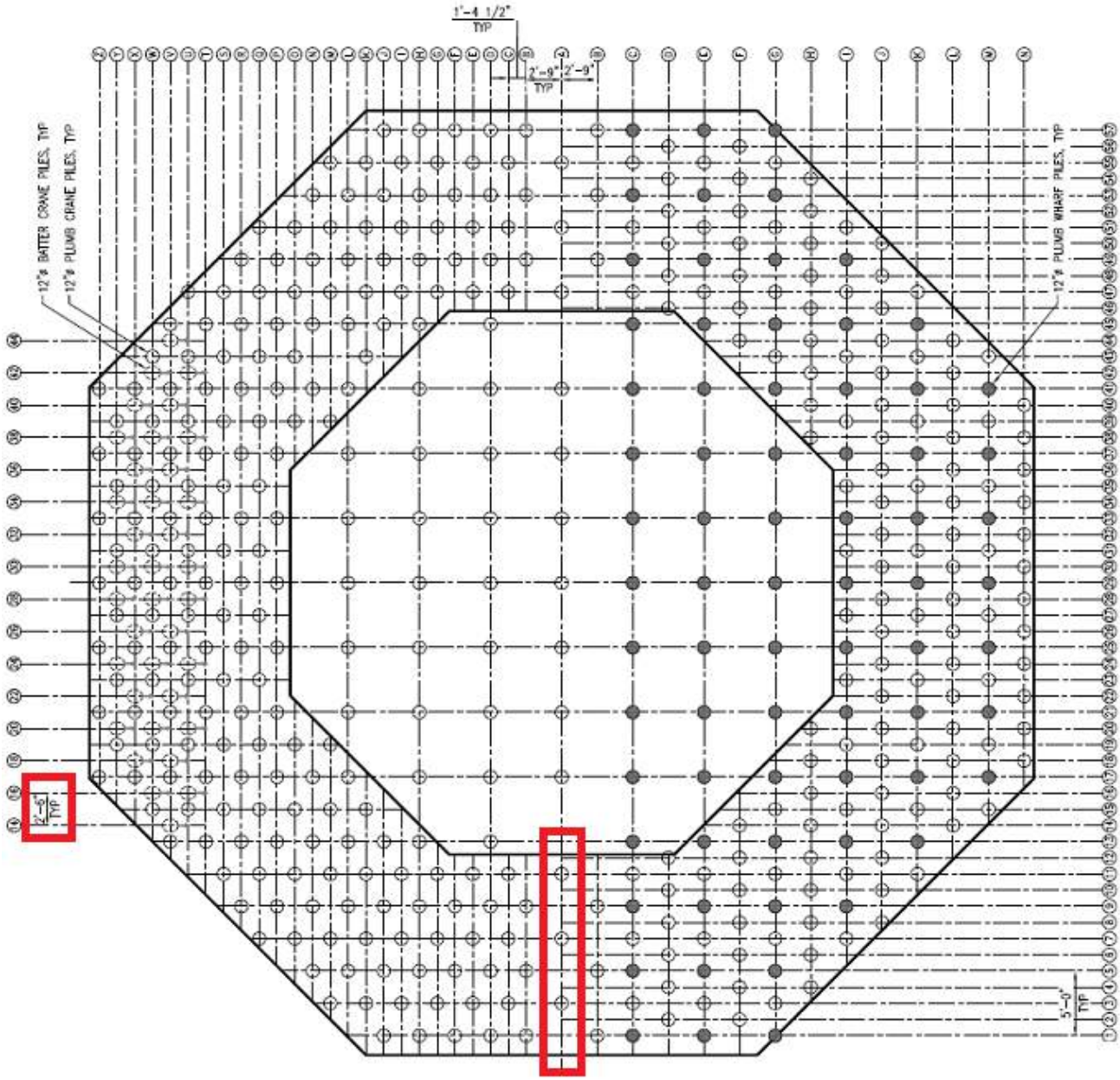

Figure 8.21 - Piles that are used to Calculate Spring Stiffness for Foundation CAP Analysis

8.2.2- Loads

8.2.2.1- Dead Load

8.2.2.1.1- Dead Load of Foundation

Dead loads of the concrete foundation cap and timber piles are automatically calculated by SAP2000.

8.2.2.1.2- Dead Load of Fill Materials

Dead load due to the weight of fill material is calculated by hand, as shown below, and applied as joint loads in the SAP2000 model 1. This load is not used in SAP2000 Model 2.

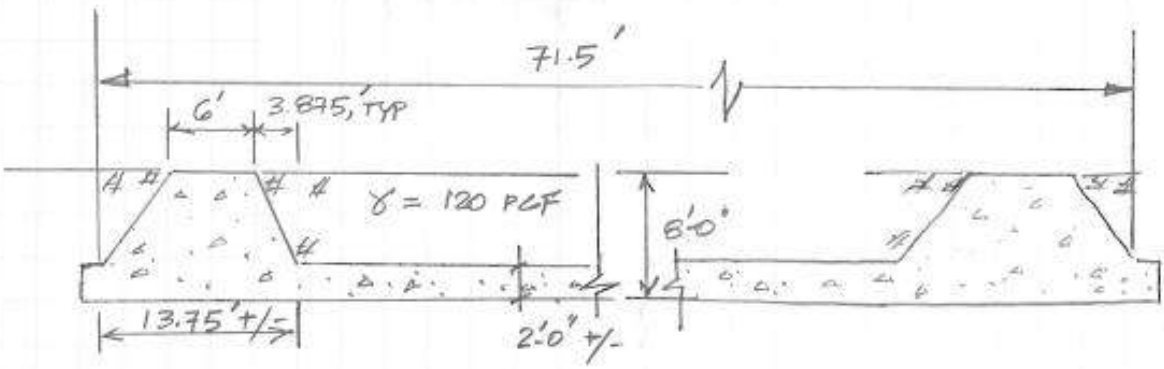

SOIL LOAD = 120 × 6' = 720 PSF.

TOTAL WT OF SOIL RETAINED WITHIN THE FOUNDATION

$$= \left\{ \frac{[71.5' - 13.75' \times 2] + [71.5 - 2 \times 9.875']}{2} \right\}^2 \times \frac{\pi}{4} \times 6' \times 0.120$$

$$= 1296 \text{ KIPS.}$$

DISTRIBUTE THE TOTAL WEIGHT EQUALLY TO ALL NODES CONTAINED WITHIN THE TRIANGULAR PART OF THE FOUNDATION MODEL.

TOTAL NO. OF THESE JOINTS = 76.

LOAD PER JOINT = 1296/76 = 17.05 KIPS/JOINT

SOIL LOAD ON EXTERIOR EDGES:

$$= \left[\frac{71.5 - [71.5 - 2 \times 3.875']}{2} \right]^2 \times \frac{\pi}{4} \times 0.120 \times 6'$$

$$= 296 \text{ KIPS.}$$

SIMILARLY, APPLY THIS LOAD EQUALLY TO ALL NODES THAT ARE ALONG THE PERIMETER TO THE FOUNDATION.

THERE ARE A TOTAL OF 83 OF THESE NODES.
LOAD PER NODE = 296/83 = 3.57 kips

SOIL LOADS ARE APPLIED AT TOP ELEVATION OF BOTTOM 2' THK SLAB.

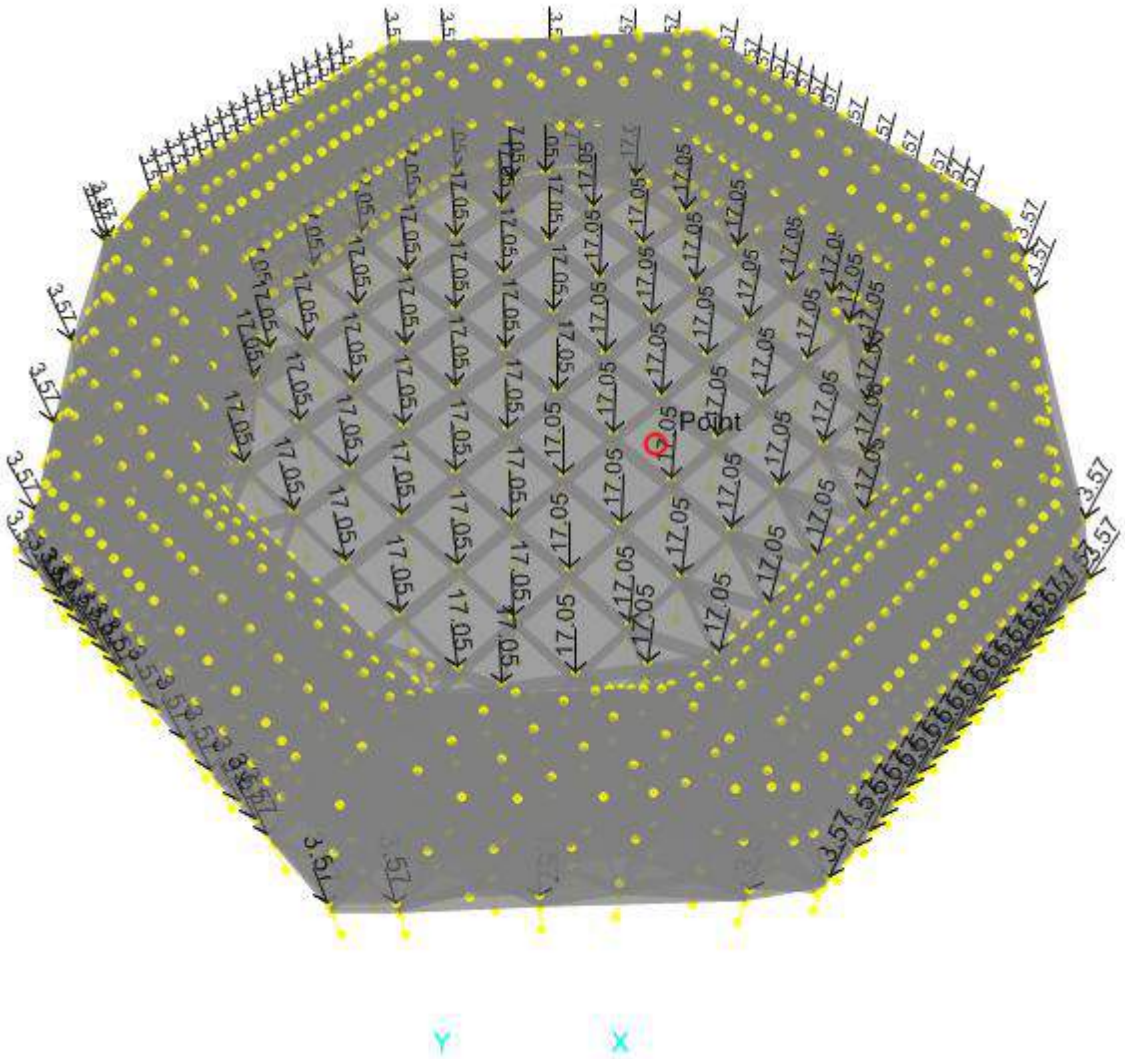

Figure 8.22 - Applied Fill Material Loads in SAP2000

8.2.2.1.3- Dead Load of the Crane

Dead load of the crane is calculated and provided by STV. These loads are applied to the Model 1 as joint loads at the crane column locations and as line loads to Model 2 along the length of the base plate (4'-8"). Table 8.1 and Table 8.2 show the crane's dead load that is applied to the models. Note that STV provided the foundation reaction loads on the crane column; as a result, the sign of the loads where changed to show the column reaction loads on the foundation.

Table 8.1: Column Reaction on the Foundation due to Crane's Dead Load Provided by STV – Model 1

Column I.D.	RX (kips)	RY (kips)	RZ (kips)	MX (kips-ft)	MY (kips-ft)	MZ (kips-ft)
C1	3.1	-15.4	-918.6	0	0	0
C2	-2.1	-15.5	-918.6	0	0	0
C3	-3.3	0.3	-716.3	0	0	0
C4	0.8	1.8	-427.0	0	0	0
C5	-0.3	12.2	-223.5	0	0	0
C6	2.6	11.0	-218.6	0	0	0
C7	-0.3	2.3	-422.7	0	0	0
C8	-0.5	3.4	-702.1	0	0	0

Table 8.2: Column Reaction on the Foundation due to Crane's Dead Load Provided by STV – Model 2

Column I.D.	RX (kips/ft)	RY (kips/ft)	RZ (kips/ft)	MX (kips-ft/ft)	MY (kips-ft/ft)	MZ (kips-ft/ft)
C1	0.7	-3.3	196.9	0	0	0
C2	-0.5	-3.4	196.9	0	0	0
C3	-0.8	0.1	153.5	0	0	0
C4	0.2	0.4	91.5	0	0	0
C5	-0.1	2.7	47.9	0	0	0
C6	0.6	2.4	46.9	0	0	0
C7	-0.1	0.5	90.6	0	0	0
C8	-0.2	0.8	150.5	0	0	0

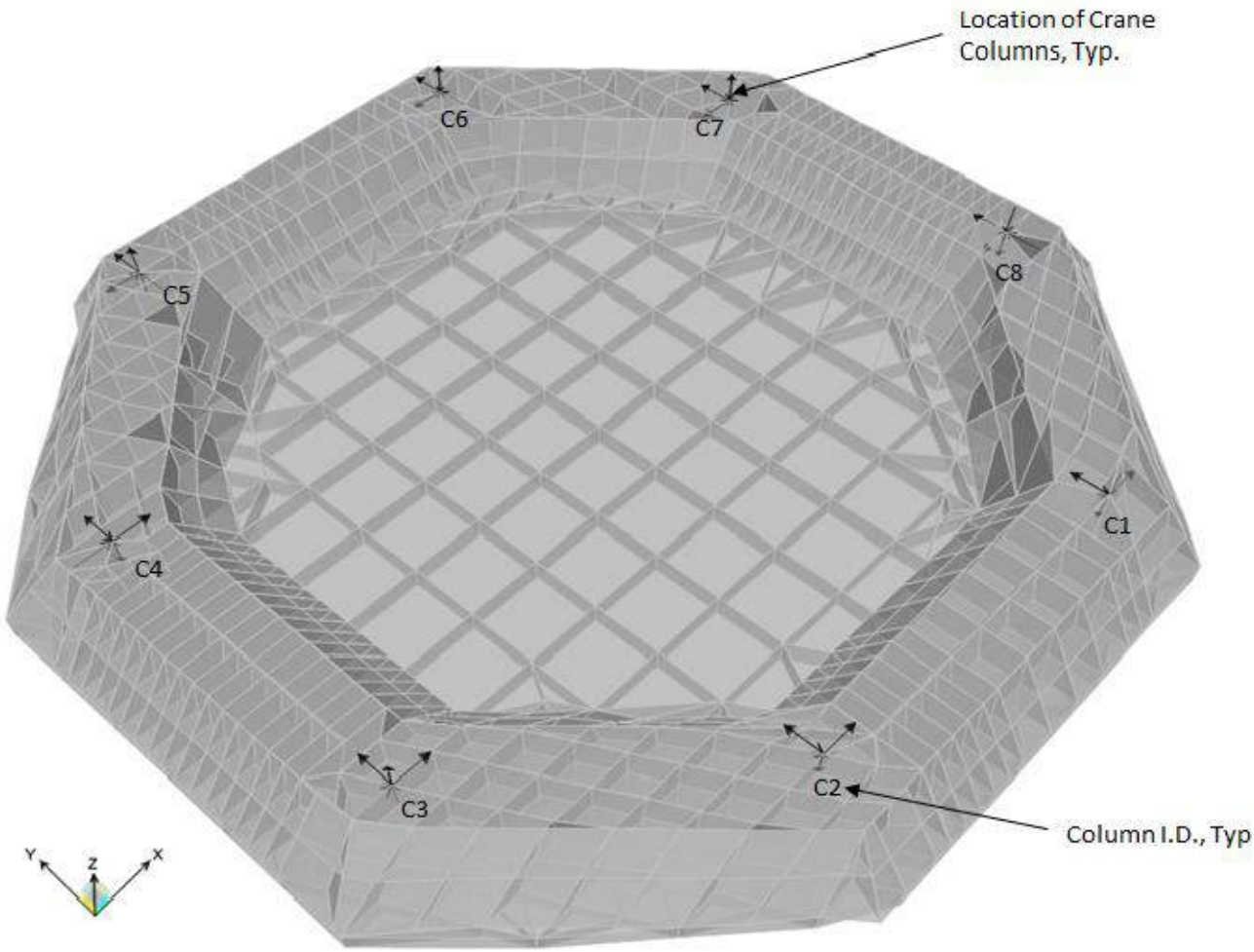

Figure 8.23 - Applied Crane Loads in SAP2000

8.2.2.2- Wind Load

Column reaction of the crane due to the wind load is calculated and provided by STV. These loads are applied to the Model 1 as joint loads at the crane column locations and as line loads to Model 2 along the length of the base plate (4'-8"). Note that STV provided the foundation reaction loads on the crane column; as a result, the sign of the loads where changed to show the column reaction loads on the foundation. Table 8.3 to Table 8.6 show crane column reactions due to the wind load in the X and Y directions, respectively, that are applied to the models.

Table 8.3: Column Reaction on the Foundation due to Wind Load in X Direction Provided by STV – Model 1

Column I.D.	RX (kips)	RY (kips)	RZ (kips)	MX (kips-ft)	MY (kips-ft)	MZ (kips-ft)
C1	2.2	-64.7	-193.2	0	0	0
C2	-8.3	7.7	142.9	0	0	0
C3	43.4	46.4	392.1	0	0	0
C4	122.1	34.4	434.2	0	0	0
C5	75.9	56.2	121.6	0	0	0
C6	70.5	-8.9	-231.5	0	0	0
C7	0.1	-35.1	-280.4	0	0	0
C8	-0.3	-35.9	-385.8	0	0	0

Table 8.4: Column Reaction on the Foundation due to Wind Load in X Direction Provided by STV – Model 2

Column I.D.	RX (kips/ft)	RY (kips/ft)	RZ (kips/ft)	MX (kips-ft/ft)	MY (kips-ft/ft)	MZ (kips-ft/ft)
C1	0.5	-13.9	41.4	0	0	0
C2	-1.8	1.7	-30.7	0	0	0
C3	9.3	10	-84.1	0	0	0
C4	26.2	7.4	-93.1	0	0	0
C5	16.3	12.1	-26.1	0	0	0
C6	15.2	-2	49.7	0	0	0
C7	0.1	-7.6	60.1	0	0	0
C8	-0.1	-7.7	82.7	0	0	0

Table 8.5: Column Reaction on the Foundation due to Wind Load in Y Direction Provided by STV – Model 1

Column I.D.	RX (kips)	RY (kips)	RZ (kips)	MX (kips-ft)	MY (kips-ft)	MZ (kips-ft)
C1	-3.7	30.5	209.7	0	0	0
C2	3.7	30.0	221.3	0	0	0
C3	-0.8	15.8	85.8	0	0	0
C4	0.8	15.2	-86.0	0	0	0
C5	-3.8	29.2	-221.1	0	0	0
C6	3.8	30.0	-209.7	0	0	0
C7	-0.3	15.1	-101.3	0	0	0
C8	0.3	15.4	101.3	0	0	0

Table 8.6: Column Reaction on the Foundation due to Wind Load in Y Direction Provided by STV – Model 2

Column I.D.	RX (kips/ft)	RY (kips/ft)	RZ (kips/ft)	MX (kips-ft/ft)	MY (kips-ft/ft)	MZ (kips-ft/ft)
C1	-0.8	6.6	-45	0	0	0
C2	0.8	6.5	-47.5	0	0	0
C3	-0.2	3.4	-18.4	0	0	0
C4	0.2	3.3	18.5	0	0	0
C5	-0.9	6.3	47.4	0	0	0
C6	0.9	6.5	45	0	0	0
C7	-0.1	3.3	21.8	0	0	0
C8	0.1	3.3	-21.8	0	0	0

8.2.2.3- Earthquake Load

Column reaction of the crane due to earthquake load is calculated and provided by STV. These loads are applied to the Model 1 as joint loads at the crane column locations and as line loads to Model 2 along the length of the base plate (4’-8”). Note that STV provided the foundation reaction loads on the crane column; as a result, the sign of the loads where changed to show the column reaction loads on the foundation. Refer to Table 8.7 to show crane column reactions due to the earthquake loads in the X, Y, and Z directions, respectively, that are applied to the models.

Table 8.7: Column Reaction on the Foundation due to Earthquake Load in X Direction Provided by STV – Model 1

Column I.D.	RX (kips)	RY (kips)	RZ (kips)	MX (kips-ft)	MY (kips-ft)	MZ (kips-ft)
C1	26.2	-10.9	-111.5	0	0	0
C2	25.5	-18.5	61.9	0	0	0
C3	52.3	-1.5	208.9	0	0	0
C4	42.8	-8.6	203.6	0	0	0
C5	14.5	9.8	64.6	0	0	0
C6	17.1	20.4	-106.5	0	0	0
C7	0.2	5.2	-167.3	0	0	0
C8	0.3	4.2	-153.7	0	0	0

Table 8.8: Column Reaction on the Foundation due to Earthquake Load in X Direction Provided by STV – Model 2

Column I.D.	RX (kips/ft)	RY (kips/ft)	RZ (kips/ft)	MX (kips-ft/ft)	MY (kips-ft/ft)	MZ (kips-ft/ft)
C1	5.7	-2.4	23.9	0	0	0
C2	5.5	-4	-13.3	0	0	0
C3	11.3	-0.4	-44.8	0	0	0
C4	9.2	-1.9	-43.7	0	0	0
C5	3.2	2.1	-13.9	0	0	0
C6	3.7	4.4	22.9	0	0	0
C7	0.1	1.2	35.9	0	0	0
C8	0.1	0.9	33	0	0	0

Table 8.9: Column Reaction on the Foundation due to Earthquake Load in Y Direction Provided by STV – Model 1

Column I.D.	RX (kips)	RY (kips)	RZ (kips)	MX (kips-ft)	MY (kips-ft)	MZ (kips-ft)
C1	-3.7	29.6	179.8	0	0	0
C2	3.5	29.2	191.1	0	0	0
C3	-0.8	15.8	73.5	0	0	0
C4	0.8	15.4	-73.5	0	0	0
C5	-3.6	28.9	-191.1	0	0	0
C6	3.8	29.4	-179.8	0	0	0
C7	-0.3	15.2	-88.8	0	0	0
C8	0.3	15.4	88.7	0	0	0

Table 8.10: Column Reaction on the Foundation due to Earthquake Load in Y Direction Provided by STV – Model 2

Column I.D.	RX (kips/ft)	RY (kips/ft)	RZ (kips/ft)	MX (kips-ft/ft)	MY (kips-ft/ft)	MZ (kips-ft/ft)
C1	-0.8	6.4	-38.6	0	0	0
C2	0.8	6.3	-41	0	0	0
C3	-0.2	3.4	-15.8	0	0	0
C4	0.2	3.3	15.8	0	0	0
C5	-0.8	6.2	41	0	0	0
C6	0.9	6.3	38.6	0	0	0
C7	-0.1	3.3	19.1	0	0	0
C8	0.1	3.3	-19.1	0	0	0

Table 8.11: Column Reaction on the Foundation due to Earthquake Load in Z Direction Provided by STV – Model 1

Column I.D.	RX (kips)	RY (kips)	RZ (kips)	MX (kips-ft)	MY (kips-ft)	MZ (kips-ft)
C1	0.1	-0.4	-39.6	0	0	0
C2	-0.1	-0.6	-40.0	0	0	0
C3	-0.1	0.1	-31.9	0	0	0
C4	0.1	0.1	-20.8	0	0	0
C5	-0.1	0.5	-13.1	0	0	0
C6	0.1	0.3	-12.5	0	0	0
C7	0.1	0.2	-20.6	0	0	0
C8	-0.1	0.2	-31.4	0	0	0

Table 8.12: Column Reaction on the Foundation due to Earthquake Load in Z Direction Provided by STV – Model 2

Column I.D.	RX (kips/ft)	RY (kips/ft)	RZ (kips/ft)	MX (kips-ft/ft)	MY (kips-ft/ft)	MZ (kips-ft/ft)
C1	0.1	-0.1	8.5	0	0	0
C2	-0.1	-0.2	8.6	0	0	0
C3	-0.1	0.1	6.9	0	0	0
C4	0.1	0.1	4.5	0	0	0
C5	-0.1	0.2	2.9	0	0	0
C6	0.1	0.1	2.7	0	0	0
C7	0.1	0.1	4.5	0	0	0
C8	-0.1	0.1	6.8	0	0	0

8.2.3- Load Combinations

The load combinations using Load and Resistance Factor Design (LRFD) to analyze the structural capacity of the foundation and Allowable Stress Design (ASD) to analyze the geotechnical capacity of the timber piles are shown below:

LRFD Load Combination per IBC 2009 Sec. 1605.2.1:

LC1 = 1.4 D

LC2 = 1.2 D + 1.6 W

LC2-1 +X Dir. *= 1.2 D + 1.6 [W in +X Direction.]*

LC2-1 -X Dir. *= 1.2 D + 1.6 [W in -X Direction.]*

LC2-2 +Y Dir. *= 1.2 D + 1.6 [W in +Y Direction.]*

LC2-2 -Y Dir. *= 1.2 D + 1.6 [W in -Y Direction.]*

LC3 = 1.2 D + 1.0 E

LC3-1 +X Dir. *= 1.2 D + 1.0 [E in +X Direction] + 1.0 [E in Z Direction] Per IBC Section 1602*

LC3-1 -X Dir. *= 1.2 D + 1.0 [E in -X Direction] + 1.0 [E in Z Direction] Per IBC Section 1602*

LC3-2 +Y Dir. *= 1.2 D + 1.0 [E in +Y Direction] + 1.0 [E in Z Direction] Per IBC Section 1602*

LC3-2 -Y Dir. *= 1.2 D + 1.0 [E in -Y Direction] + 1.0 [E in Z Direction] Per IBC Section 1602*

LC4 = 0.9 D + 1.6 W

LC4-1 +X Dir. *= 0.9 D + 1.6 [W in +X Direction.]*

LC4-1 -X Dir. *= 0.9 D + 1.6 [W in -X Direction.]*

LC4-2 +Y Dir. *= 0.9 D + 1.6 [W in +Y Direction.]*

LC4-2 -Y Dir. *= 0.9 D + 1.6 [W in -Y Direction.]*

LC5 = 0.9 D + 1.0 E

LC5-1 +X Dir. *= 0.9 D + 1.0 [E in +X Direction] - 1.0 [E in Z Direction] Per IBC Section 1602*

LC5-1 -X Dir. *= 0.9 D + 1.0 [E in -X Direction] - 1.0 [E in Z Direction] Per IBC Section 1602*

LC5-2 +Y Dir. *= 0.9 D + 1.0 [E in +Y Direction] - 1.0 [E in Z Direction] Per IBC Section 1602*

LC5-2 -Y Dir. *= 0.9 D + 1.0 [E in -Y Direction] - 1.0 [E in Z Direction] Per IBC Section 1602*

SC1 = 1.0 D

SC2 = 1.0 D + 1.0 W

SC2-1 +X Dir. *= 1.0 D + 1.0 [W in +X Direction.]*

SC2-1 -X Dir. *= 1.0 D + 1.0 [W in -X Direction.]*

SC2-2 +Y Dir. *= 1.0 D + 1.0 [W in +Y Direction.]*

SC2-2 -Y Dir. *= 1.0 D + 1.0 [W in -Y Direction.]*

SC3 = 1.0 D + 0.7 E

SC3-1 +X Dir. *= 1.0 D + 0.7 [E in +X Direction] + 0.7 [E in Z Direction] Per IBC Section 1602*

SC3-1 -X Dir. *= 1.0 D + 0.7 [E in -X Direction] + 0.7 [E in Z Direction] Per IBC Section 1602*

SC3-2 +Y Dir. *= 1.0 D + 0.7 [E in +Y Direction] + 0.7 [E in Z Direction] Per IBC Section 1602*

SC3-2 -Y Dir. *= 1.0 D + 0.7 [E in -Y Direction] + 0.7 [E in Z Direction] Per IBC Section 1602*

SC4 = 0.6 D + 1.0 W

SC4-1 +X Dir. *= 0.6 D + 1.0 [W in +X Direction.]*

SC4-1 -X Dir. *= 0.6 D + 1.0 [W in -X Direction.]*

SC4-2 +Y Dir. *= 0.6 D + 1.0 [W in +Y Direction.]*

SC4-2 -Y Dir. *= 0.6 D + 1.0 [W in -Y Direction.]*

SC5 = 0.6 D + 0.7 E

SC5-1 +X Dir. *= 0.6 D + 0.7 [E in +X Direction] - 0.7 [E in Z Direction] Per IBC Section 1602*

SC5-1 -X Dir. *= 0.6 D + 0.7 [E in -X Direction] - 0.7 [E in Z Direction] Per IBC Section 1602*

SC5-2 +Y Dir. *= 0.6 D + 0.7 [E in +Y Direction] - 0.7 [E in Z Direction] Per IBC Section 1602*

SC5-2 -Y Dir. *= 0.6 D + 0.7 [E in -Y Direction] - 0.7 [E in Z Direction] Per IBC Section 1602*

8.2.4- Analysis Results

8.2.4.1- Concrete Cap

Concrete cap capacity is calculated based on ACI 318-08. Refer to Figure 8.3 and Appendix D for the foundation reinforcement details. Summary of the Concrete Cap analysis results are shown in Table 8.13.

Table 8.13: Structural Analysis of the Concrete Cap - Summary of the Results

	+ve Moment	-ve Moment	Shear	Bearing Pressure under Base Plates
Maximum Load Demand	150 kips-ft	4,500	620 kips	470 psi
Load Combination (LRFD)	LC2	LC2	LC2	SC2
Load Capacity	3,830 kips-ft1	5,080 kips-ft1	1,460 kips1	3,000 psi
DCR2	0.04	0.89	0.42	0.15

Notes: 1. Based on ACI 318-08

2. Demand to Capacity Ratio

In addition, from Model 1 (see Attachment 8.2.1.2) the maximum stress at the bottom of the concrete cap is about 200 psi, see Figure 8.24, which is less than the modulus of rupture of concrete. Concrete's modulus of rupture is calculated from 28-day compressive stress of concrete using ACI 318-08 Equation 9-10 as follow:

$$fr = 7.5 \sqrt{f'c} = 410 \text{ psi} > 200 \text{ psi}$$

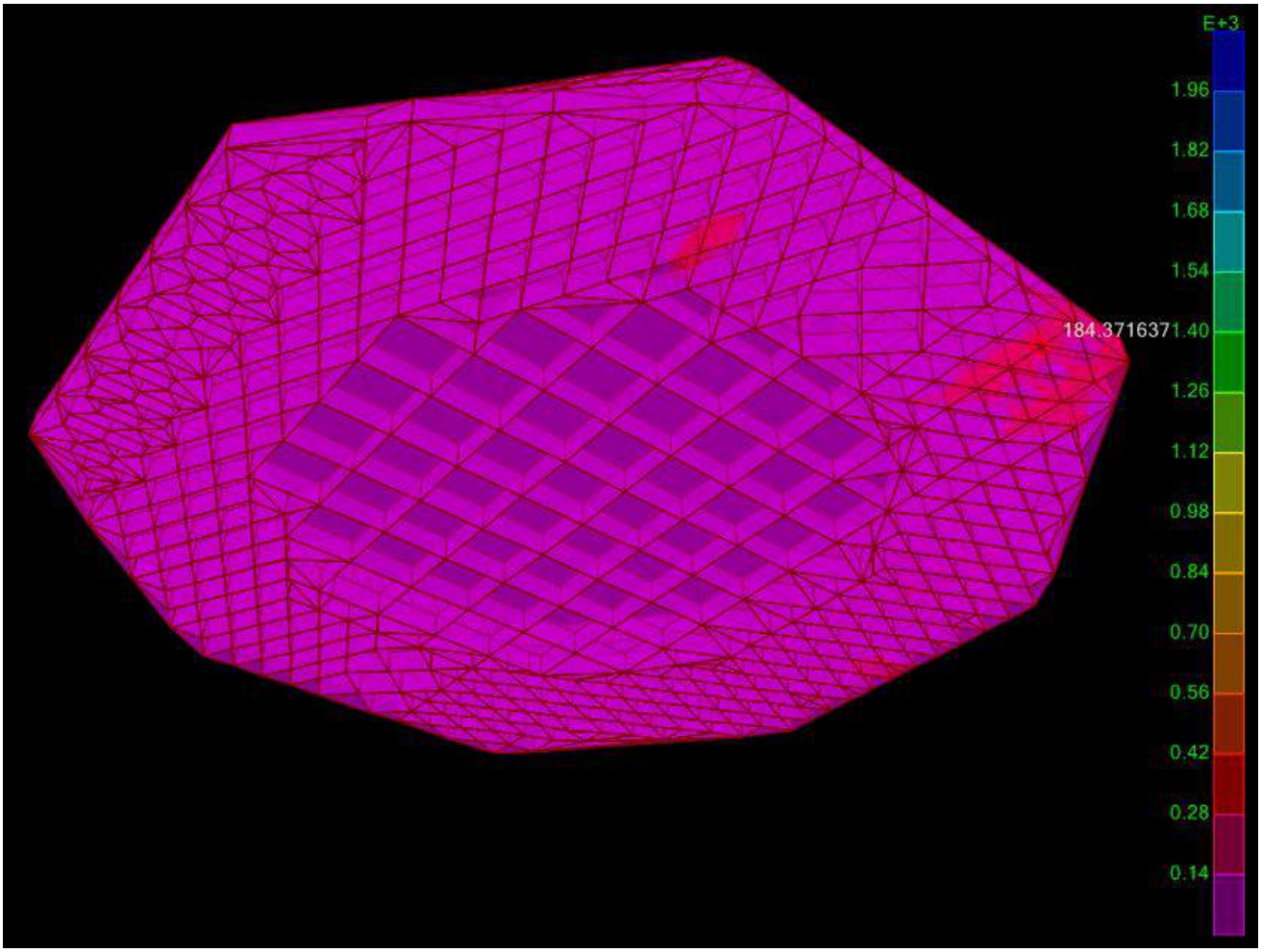

Figure 8.24 - Stress at Bottom of the Concrete Cap (Piles are not shown for clarity), Units: lbs-in

8.2.4.2- Timber Piles

8.2.4.2.1- Structural Analysis

As mentioned before, a radial degradation of ½" all around is assumed for timber piles for the foundation pile strength analysis. Structural capacity of the piles was checked using LRFD load combinations. The load demand of the piles extracted from the SAP 2000 model of foundation (Model 1). Summary of the results are shown on Table 8.14:

Table 8.14: Structural Analysis of the Piles (assuming 1/2" Radial Degradation of the Piles) - Summary of the Results

	Moment	Shear	Axial Compression	Combined Bending & Axial Compression
Pile I.D.1	811	982	529	Conservatively used the max. loads
Maximum Load Demand	14 kips-ft	5 kips	47 kips	14 kips-ft Moment 47 kips Comp.
Load Combination (LRFD)	LC 2-1 –X Dir.	LC 2-1 +X Dir.	LC 2-2 -Y Dir.	N/A
Load Capacity	43.5 kips-ft3	15.1 kips3	194.8 kips3	-
DCR2	0.33	0.33	0.25	0.50

Notes: 1. Represent the Pile I.D in the SAP 2000 Model

2. Demand to Capacity Ratio

3. Based on "National Design Specification (NDS) for Wood Construction, 2005"

Refer to Figure 8.25 for locations of the critical piles that are shown in Table 8.14. As shown, the piles structural capacity is adequate to resist the most critical effect from the LRFD load combinations.

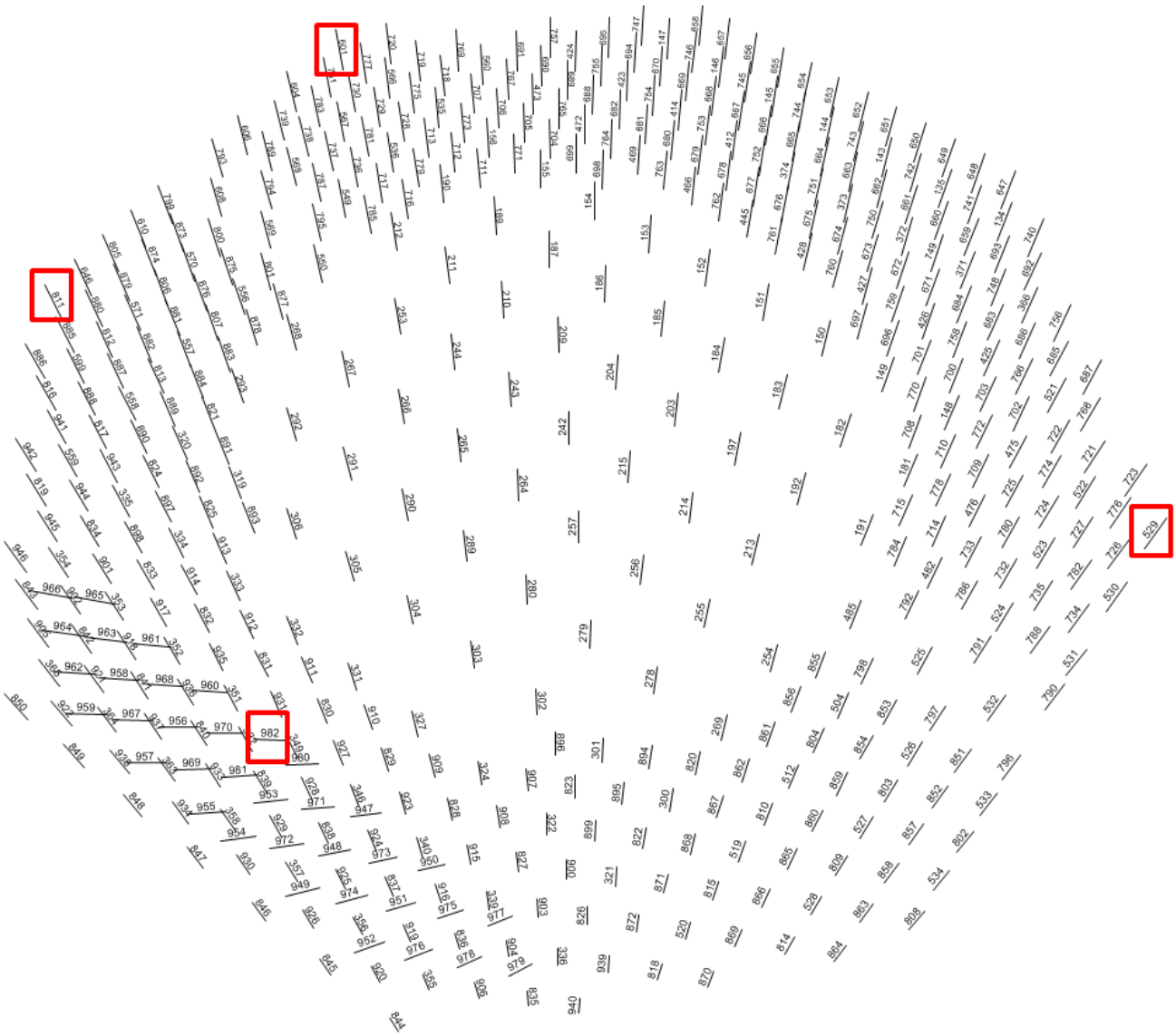

Figure 8.25 - Pile Locations

Although, based on experience and engineering judgment, the piles are not expected to lose more than ½" of their radius due to degradation, however, to be even more conservative, a second set of analyses were performed to check the piles' structural behavior assuming 1" radial degradation of the piles. Summary of the results are shown on Table 8.15.

Table 8.15: Structural Analysis of the Piles (assuming 1" Radial Degradation of the Piles) - Summary of the Results

	Moment	Shear	Axial Compression	Combined Bending & Axial Compression
Pile I.D.1	601	982	529	Conservatively used the max. loads
Maximum Load Demand	13 kips-ft	5 kips	47 kips	13 kips-ft Moment 47 kips Comp.
Load Combination (LRFD)	LC 2-1 –X Dir.	LC 2-1 +X Dir.	LC 2-2 -Y Dir.	N/A
Load Capacity	32.7 kips-ft3	12.4 kips3	159.9 kips3	-
DCR2	0.40	0.41	0.30	0.66

Notes: 1. Represent the Pile I.D in the SAP 2000 Model

2. Demand to Capacity Ratio

3. Based on "National Design Specification (NDS) for Wood Construction, 2005"

It should be noted that the analysis assumed that the geotechnical capacity of the piles remains unaltered even with 1" radial degradation. Although evaluation of the geotechnical capacity of the piles due to radial degradation is outside of the scope of this study, however, given that the structure was constructed in 1940's and no significant cracking of the concrete cap or settlement of the foundation have been noticed so far, it can be assumed that the pile capacities are unaffected even if piles were somewhat degraded.

8.2.4.2.2- Timber Pile to Concrete Cap Connection

Based on the available record drawings (Figure 8.26), the piles are penetrated 6 in. into the concrete cap. The relatively small amount of penetration is not sufficient to develop a significant bond capacity between concrete and timber piles to resist tension loads. As a result, it is assumed that the pile tension capacity is zero.

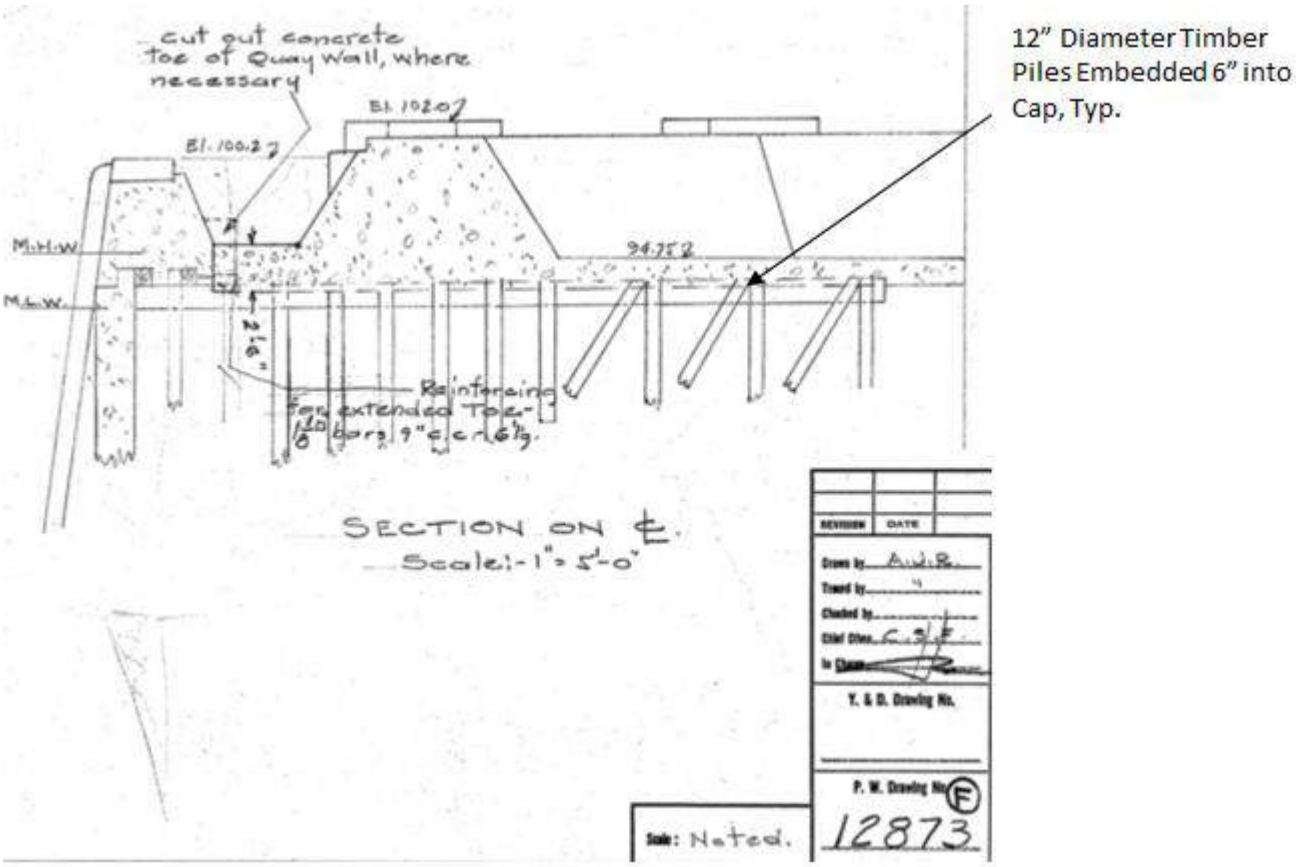

Figure 8.26 - Partial Crane Foundation Section

From the SAP 2000 model 1 analysis results, the maximum pile tension and compression loads under ASD load combinations are 5,000 lbs (load combination "SC4-1 +X Dir.") and 37,000 lbs (load combination "SC2-1 +X Dir.") , respectively. These loads are shown in Figure 8.27 and Figure 8.28. In these figures, the 'red' indicates piles that are in compression and 'blue' indicates piles that are in tension.

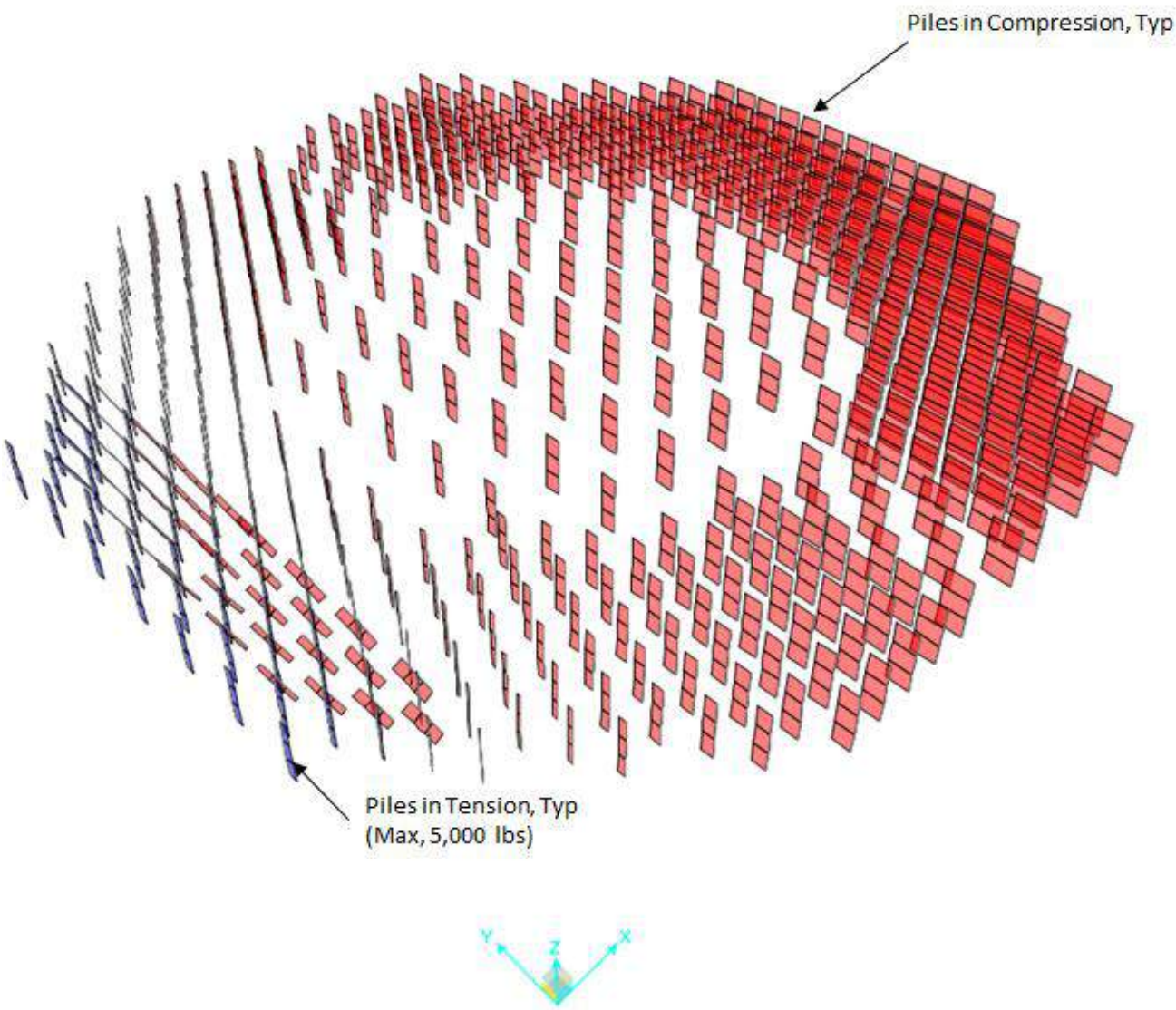

Figure 8.27 - SAP2000-Maximum Pile Axial Tension Loads under ASD Load Combinations (Load Combination "SC4-1 +X Dir."), 'Red'-Compression, 'Blue'-Tension

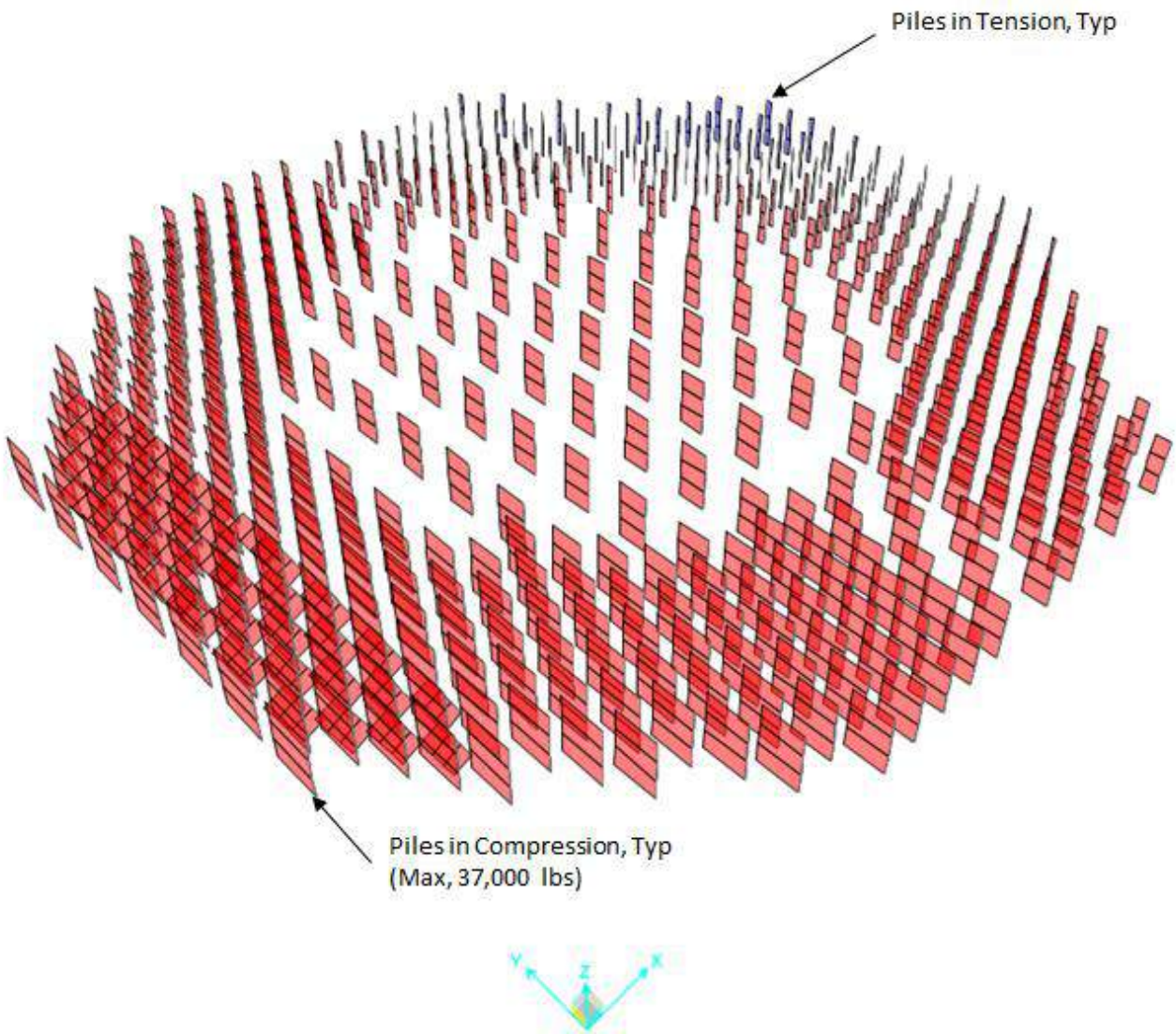

Figure 8.28 - SAP2000-Maximum Pile Axial Compression Loads under ASD Load Combinations (Load Combinations SC2-1 +X Dir.) 'Red'-Compression, 'Blue'-Tension

The maximum tensile loads in the piles due to the ASD and LRFD load combinations are 5,000 lbs and 8,000 lbs, respectively (Pile No. 850, refer to Figure 8.25,Figure 8.27, and Figure 8.29). This indicates that the bond strength between the timber piles and concrete cap may not be sufficient to resist the expected tension loads in the piles. However, if the foundation remains stable, i.e. factor of safety against overturning be greater than 1.50 in accordance with IBC 2009 Section 1807.2.3, and the axial compression loads on the piles do not exceed the structural and geotechnical capacity of the piles when the piles in tension are ineffective, it can be concluded that regardless of existence of tensile force in some of the piles, the foundation does not need any retrofit action.

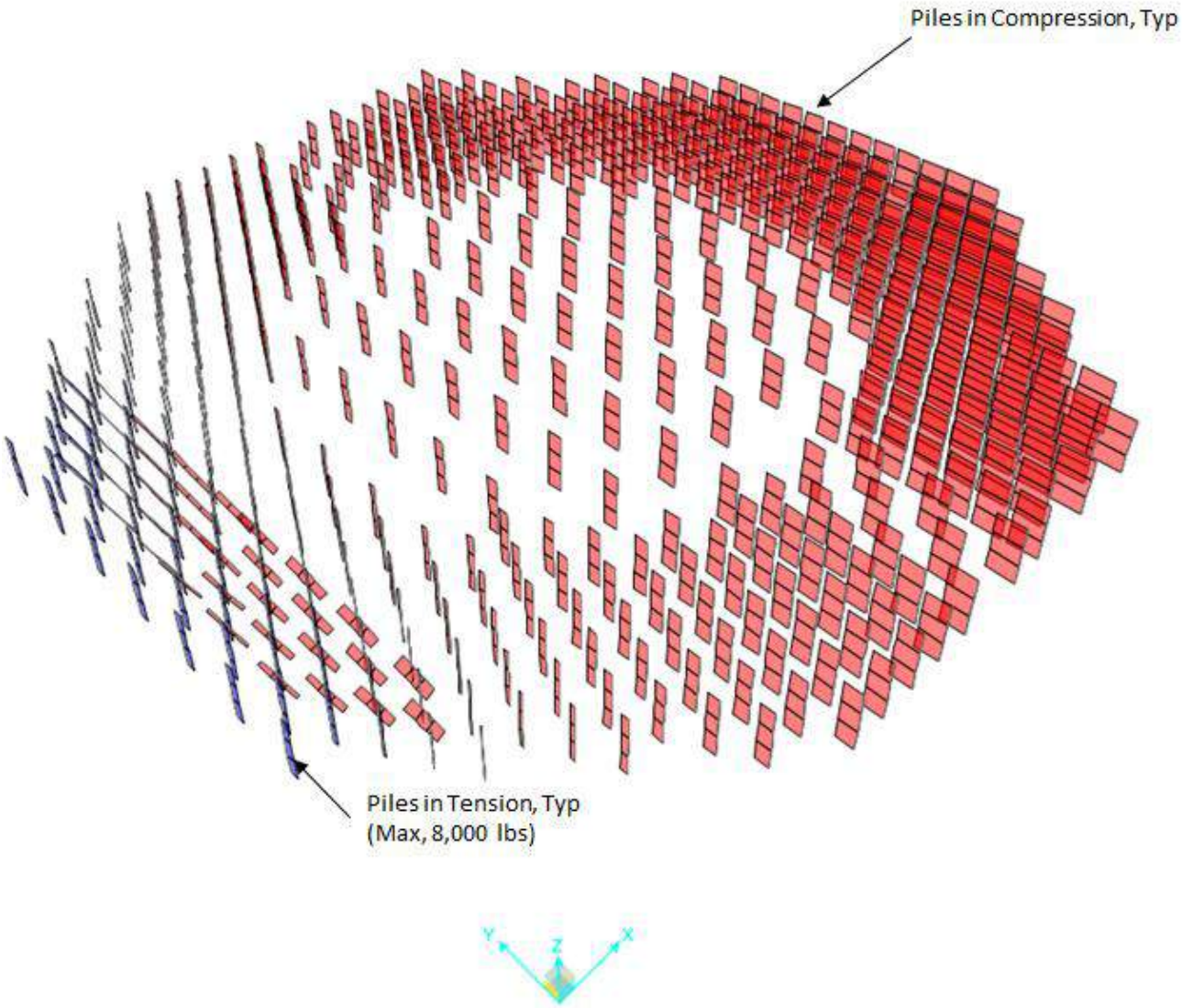

Figure 8.29 - SAP2000-Maximum Pile Axial Tension Loads under LRFD Load Combinations (Load Combinations LC4-1 +X Dir.) 'Red'-Compression, 'Blue'-Tension

In order to do the stability analysis, the magnitude and position of the resultant of the crane's dead and wind load acting on the crane should be established. These loads are provided by STV and shown on Table 8.16.

Table 8.16: Magnitude and Position of the Resultant Crane's Dead and Wind Load acting on the Crane

Load Case	Load Magnitude (kips)	Point of Action in East-West Direction1 (ft)	Point of Action in North-South Direction1 (ft)	Point of Action Along Crane Height1 (ft)
Dead Load	4,547	0	-9.9	N/A
Wind Load in X Direction (East-West)	394	N/A	+27.2	144.7
Wind Load in Y Direction (North-South)	244	0	N/A	142

Notes: 1. Origin (0,0,0) being located at the center of the crane tower (center of foundation) at slab level.

The overturning moments are calculated as follow:

- "Wind Load" multiplies by "Point of its action along the Z direction". Note that wind load in each direction should be analyze separately.
- "Dead Load" multiplies by "Point of its action along X or Y direction"

These overturning moments are resisting by "Dead Load of concrete cap", "Dead Load of fill material", and "Dead Load of the crane", see Figure 8.30:

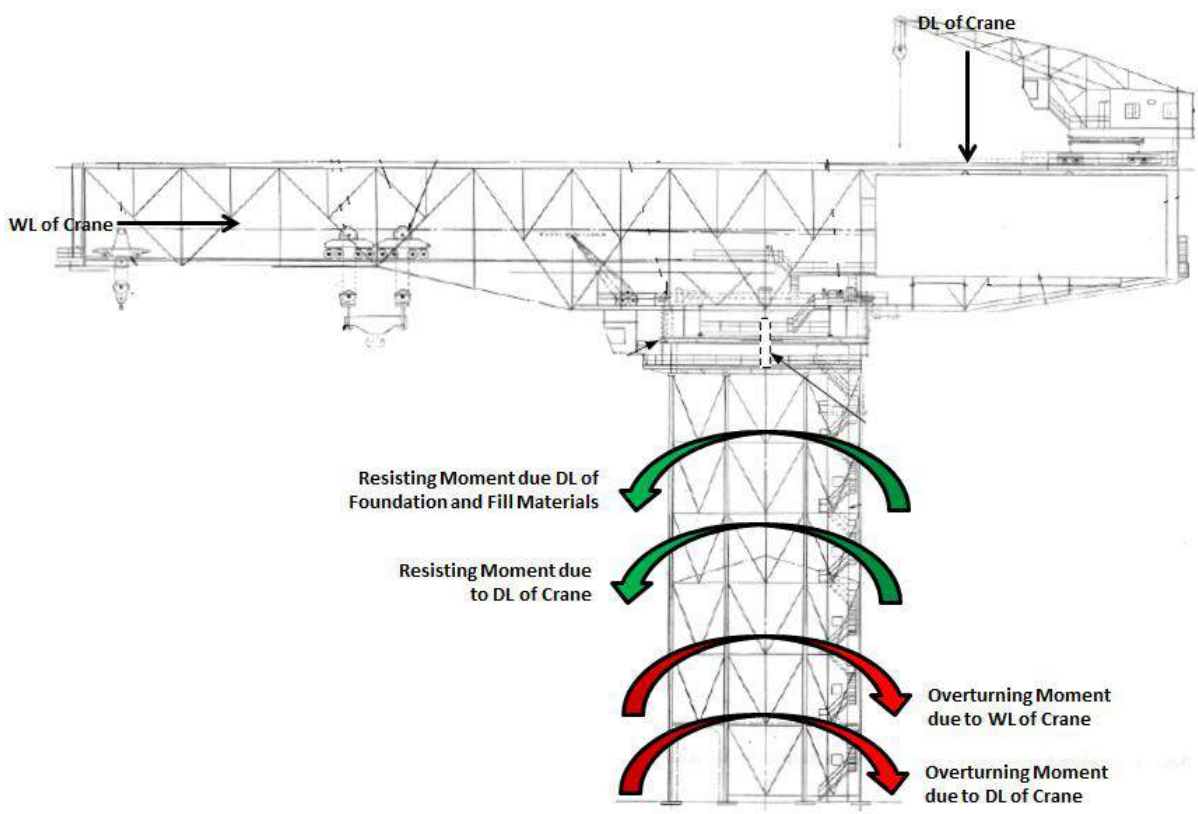

Figure 8.30: Overturning and Resisting Moments on the Crane Foundation

If the piles are not effective in tension, the magnitude of compression loads in piles will be higher than what is calculated by SAP2000 Model 1 (see Figure 8.28). The maximum compression load on the piles with the assumption that the piles are not effective on tension is calculated as follow:

1. The compressive stresses act over the entire base if the eccentricity of the resultant vertical force with respect to the centerline of the foundation lies within the middle third of the foundation. Eccentricity of the resultant force can be calculated as follow:

   $e = H/2 - (MR - MOT) / WT$, where:

   H = Total width of the foundation
   MR = Resistance moment
   MOT = Overturning moment, and
   WT = Total vertical load

After the analysis, it was determined that eccentricity of the resultant force in both North-South and East-West direction lies within the middle third of the foundation (refer to Attachment 8.3).

2. Assuming compressive stresses act over the entire foundation, the magnitude of the maximum compression load at the end of the foundation can be calculated as follow:

   $Pmax = WT / A + MOT / Z$, where:

   W = Total vertical load
   A = Total area of the foundation, and
   Z = Section modulus of the foundation

The results of the foundation stability analysis are summarized in Table 8.17.

Table 8.17: Stability Analysis of the Foundation – Summary of the Results

F.O.S. against Overturning in E-W Direction	5.4
F.O.S. against Overturning in N-S Direction	4.0
Max. Axial Load on the Piles (assuming that the piles are not effective under tension load)	47.8 kips
Geotechnical Axial Capacity of the Piles under Compression	40 kips2
Min. Geotechnical Axial Compression FOS1 of the Piles under short term extreme loads	1.683

Notes: 1. Factor of Safety

2. Allowable Bearing Capacity of the piles is 40,000 lb (see Section 0) with Factor of Safety of 2.0.

3. The compression load in the piles under short term extreme wind load is 47.8 kips, which is about 20% above the allowable pile bearing capacity. This reduces the factor of safety from 2.0 to 1.68. Under design load combinations using short term extreme wind load case, the slight reduction in the factor of safety is acceptable.

8.2.4.2.3- Geotechnical Analysis of Timber Piles

Based on as-built drawing "P.W. Drawing No 19209", allowable capacity of the piles is 40,000 lbs with factor of safety of 2.0. Based on the SAP 2000 Model 1 analysis results, the maximum axial compression load demand on the pile due to the ASD load combinations is 37,000 lbs which is less than the allowable bearing capacity of the piles.

Also, as shown in Table 8.17, the maximum compression load on the piles assuming that the piles are not effective under tension load is 47.8 kips. This load is about 20% above the allowable pile bearing capacity. This reduces the factor of safety of piles from 2.0 to 1.68. Under design load combinations using short term extreme wind load case, the slight reduction in the factor of safety is acceptable. In order to check the hand calculations, zero tension limit was assigned to the piles and the SAP model of the foundation was run nonlinearly. The result indicates that the maximum axial compression load of the piles under the ASD load combination is about 40 kips which is lower than the result of the hand calculations.

8.2.5- Conclusion: Mothball for 20 Years

In short of full site investigation, this study relied upon visual inspection of the existing foundation, available record drawings of the structure, original pile test record and engineering experience and judgment.

Based on detailed structural analysis and study approach for the crane foundation, it is concluded that the crane foundation is adequate to resist the maximum load demands from the crane superstructure based on the requirements of the applicable codes. Furthermore, the study considered varying depth of degradation of the timber piles to determine its sensitivity on the capacity of the foundation. It was found through analysis that even with 1" radial degradation of timber piles, the foundation piles retain sufficient structural capacity. As a result, no retrofit for the foundation is recommended for the loading conditions evaluated. This analysis is based on the assumption that the foundation does not have any significant corrosion nor damage that degrades its structural capacity (other than pile radial degradation that is discussed previously). However, if a greater certainty is required, a detailed site investigation, such as verification of concrete cap and timber pile conditions using test pits, etc can be undertaken.

8-3
Selected Drawings of Existing Foundation

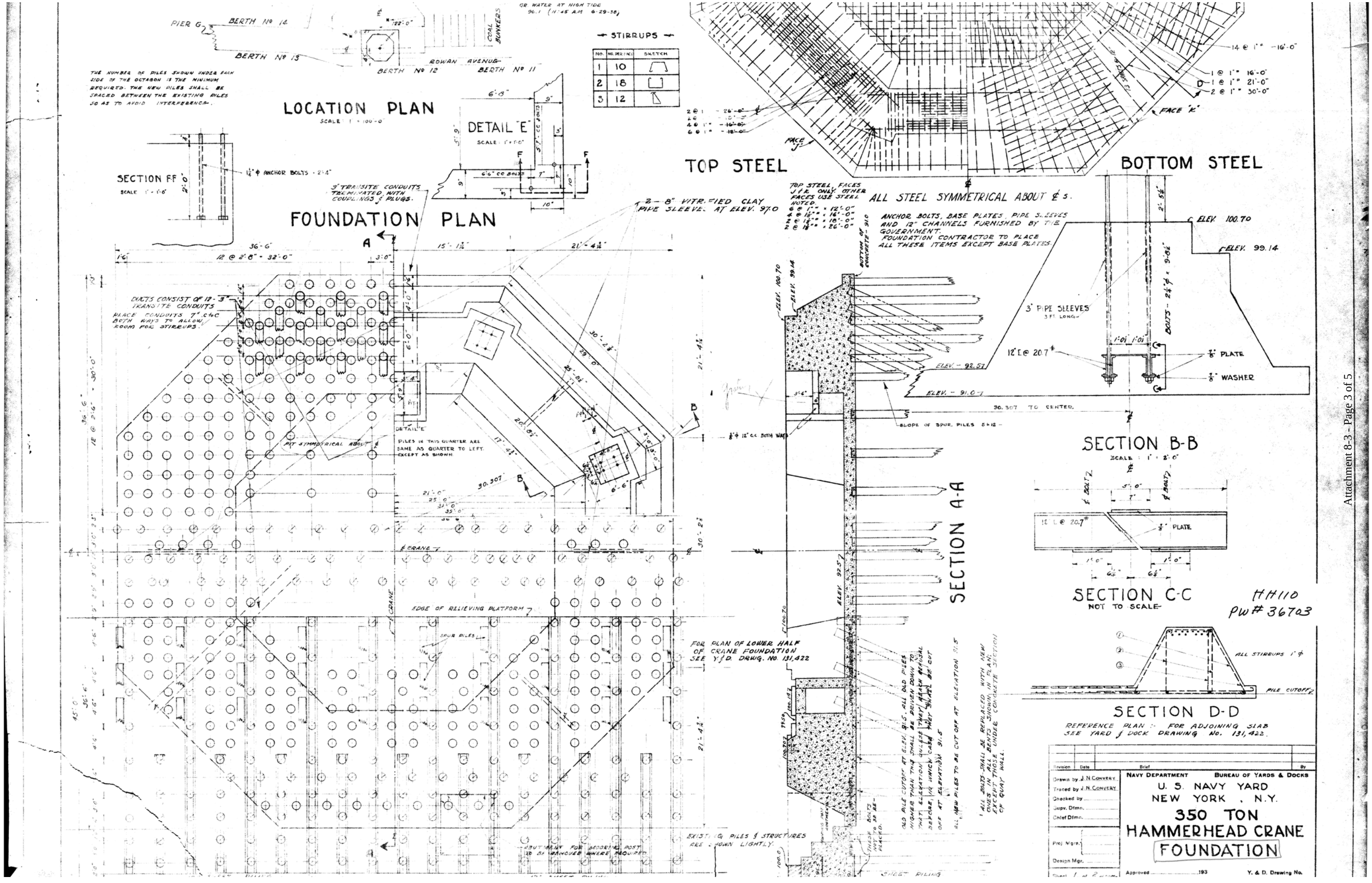

HH110
PW# 36703

Attachment 8-3 – Page 3 of 5

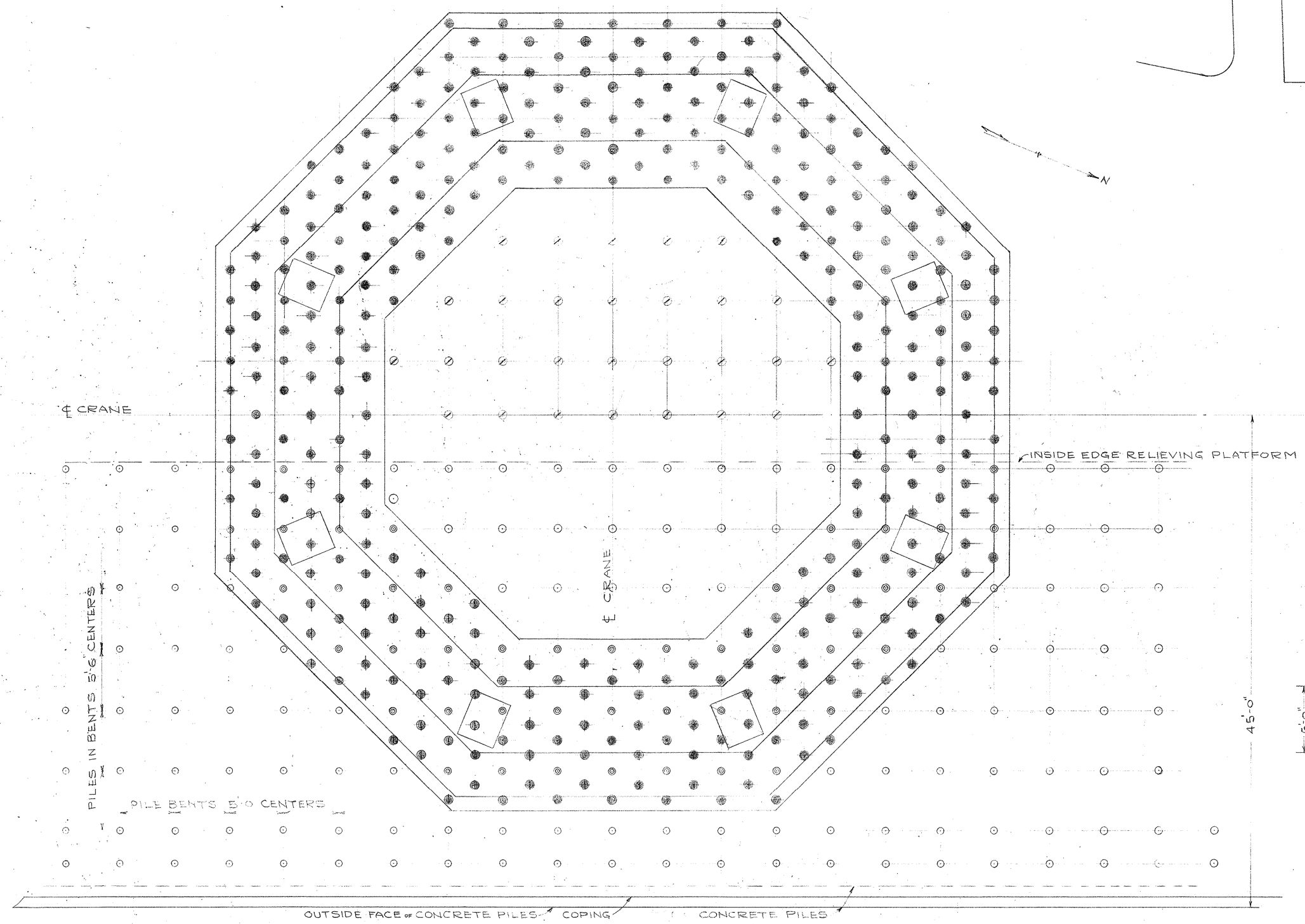

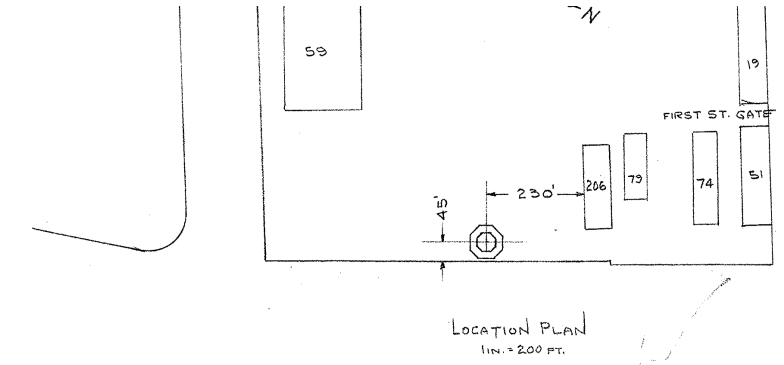

LOCATION PLAN
1 IN. = 200 FT.

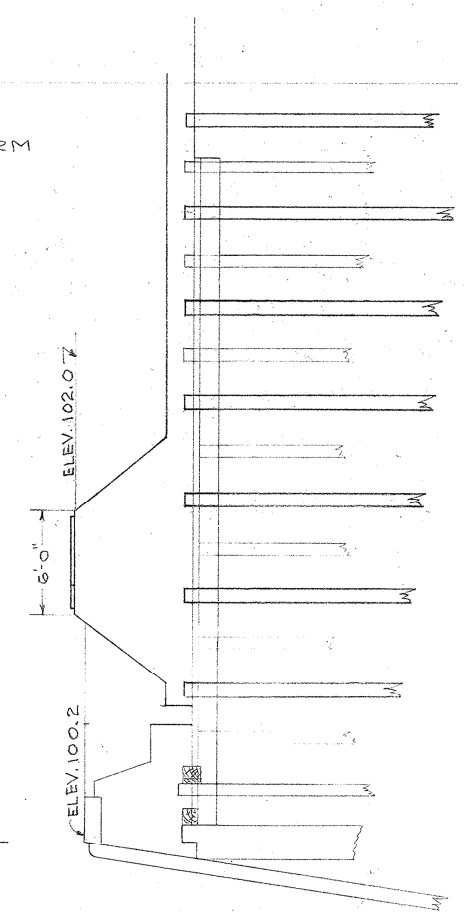

SECTION ON ℄

LEGEND

- EXISTING PILES
- EXISTING PILES EFFECTIVE
- NEW PILES
- NEW PILES FOR CENTER

PILES MINIMUM OF 34 INCHES ON CENTERS

Revision	Date	Brief	By

Drawn by Falconer
Traced by F.
Checked by
Chief Dfmn. C.S.E.
In Charge
Y. & D. Drawing No.

NORFOLK NAVY YARD, PORTSMOUTH, VA.
350T HAMMERHEAD CRANE
PROPOSED
FOUNDATION PILES

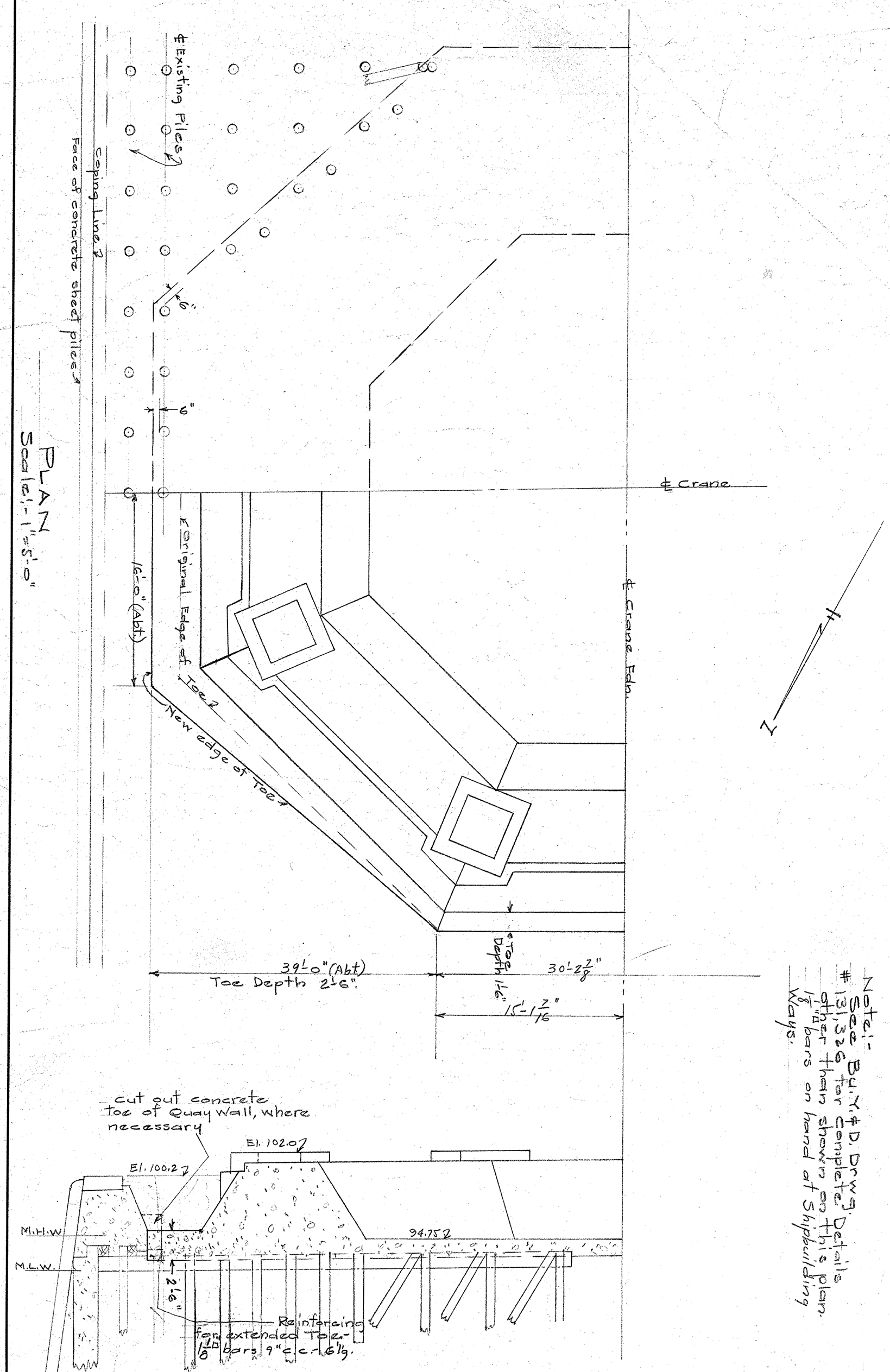

REVISION	DATE	BRIEF	BY

Drawn by A.W.R.
Traced by "
Checked by
Chief Dfmn. C.S.F.
In Charge

Y. & D. Drawing No.

P. W. Drawing No. F 12873

Scale: Noted.

NORFOLK NAVY YARD, PORTSMOUTH, VA.

350 TON HAMMERHEAD CRANE
CHANGE
IN
FOUNDATION

Approved 9/13/39 19

A. L. Fogg
Public Works Officer

53-D

8-4
Foundation Calculation Details

8-4-1
Design Criteria

8-4-1- DESIGN CRITERIA

Specific Codes, References and numerical values are included with the analysis for Quality Control.

8-4-1-1- Design Codes & References

1. UFC 3-301-01, "Structural Engineering", 27 January 2010 with Change 3, 31 January 2012
2. IBC 2009, "International Building Code", 2009
3. ACI 318-08, "Building Code Requirements for Structural Concrete and Commentary"
4. National Design Specification (NDS) for Wood Construction, 2005

8-4-1-2- Material Properties & Other Considerations

Specified Compressive Strength of Concrete, f'_c =	3,000	psi	Assumed
Modulus of Elasticity of Concrete, E_c =	3,122	ksi	= 57,000 √ f'c (Based on ACI 318-08 Section 8.5.1)
Unit Weight of Normal Weight Concrete, $_c$ =	150	pcf	UFC 4-152-01 Table 3-1
Specified Yield Strength of Reinforcement, f_y =	33	ksi	Assumed based on time of construction
Modulus of Elasticity of Steel, E_s =	29,000	ksi	Based on ACI 318-08 Sec. 8.5.2
Unit Weight of Steel, $_s$ =	490	pcf	UFC 4-152-01 Table 3-1
Unit Weight of Soil, $_R$ =	120	pcf	UFC 4-152-01 Table 3-1

Timber Piles:

In lack of detailed field investigation and available information regarding species, it is assumed that the species is "Southern Pine", which is the most common species found in east coast.

Min. Modulus of Elasticity of Timber Piles, $E_{T\text{-}Min}$ =	790	ksi	Per NDS Table 6A
Unit Weight of Timber Piles, $_T$ =	35	pcf	Per NDS Table 11.3.2A

8-4-1-3- Loads

8-4-1-3-1- Dead Loads (D)

Soil Dead Load on Circular Part of the Foundation

Foundation Thickness, Th =	2	ft, Per as-built dwg. 12873
Soil Thickness above Foundation, Th_S =	6	ft, Per as-built dwg. 12873
Total Foundation Width, B =	71.5	ft, Per as-built dwg. 12873
Total Soil Weight, $W_{S\text{-}I}$ =	1,296	kips

Distribute the total soil weight equally to all of the nodes contained within the circular part of the foundation in the SAP model:

Total Number of Nodes =	76	
Load per Interior Joints =	17.05	kips/joint

Soil Dead Load on Exterior Edges of the Foundation:

Total Soil Weight, $W_{S\text{-}E}$ =	296	kips

Distribute the total soil weight equally to all of the nodes along the perimeter of the foundation in the SAP model:

Total Number of Nodes =	83	
Load per Exterior Joints =	3.57	kips/joint

Dead Load of the Crane:

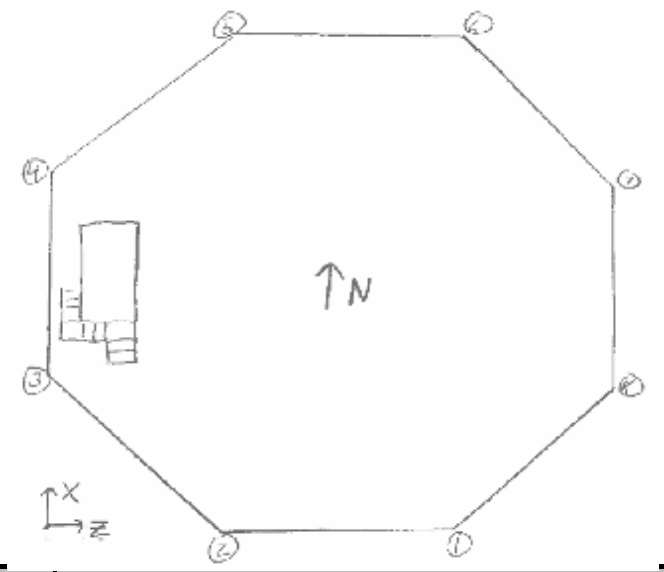

Column No.	Column Reaction on the Foundation due to Crane's Dead Load[1,2]					
	RX (kips)	RY (kips)	RZ (kips)	MX (kips-ft)	MY (kips-ft)	MZ (kips-ft)
1	3.1	-15.4	-918.6	0	0	0
2	-2.1	-15.5	-918.6	0	0	0
3	-3.3	0.3	-716.3	0	0	0
4	0.8	1.8	-427.0	0	0	0
5	-0.3	12.2	-223.5	0	0	0
6	2.6	11.0	-218.6	0	0	0
7	-0.3	2.3	-422.7	0	0	0
8	-0.5	3.4	-702.1	0	0	0

Notes: 1. Input from STV.
2. The axis convention used in the SAP analysis are different from the axis convention that STV used in their analysis as follow:

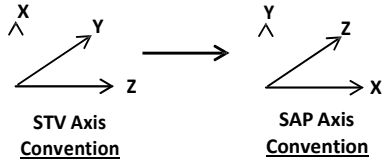

8-4-1-3-2- Wind Load (W)

Wind Load From Crane Columns on Foundation

Basic Wind Speed = 105 mph

Column No.[2]	Column Reaction on the Foundation due to Wind Load[1]					
	RX (kips)	RY (kips)	RZ (kips)	MX (kips-ft)	MY (kips-ft)	MZ (kips-ft)
	Wind in the X Direction[3,4]					
1	2.2	-64.7	-193.2	0	0	0
2	-8.3	7.7	142.9	0	0	0
3	43.4	46.4	392.1	0	0	0
4	122.1	34.4	434.2	0	0	0
5	75.9	56.2	121.6	0	0	0
6	70.5	-8.9	-231.5	0	0	0
7	0.1	-35.1	-280.4	0	0	0
8	-0.3	-35.9	-385.8	0	0	0
	Wind in the Y Direction[3,4]					
1	-3.7	30.5	209.7	0	0	0
2	3.7	30.0	221.3	0	0	0
3	-0.8	15.8	85.8	0	0	0
4	0.8	15.2	-86.0	0	0	0
5	-3.8	29.2	-221.1	0	0	0
6	3.8	30.0	-209.7	0	0	0
7	-0.3	15.1	-101.3	0	0	0
8	0.3	15.4	101.3	0	0	0

Notes: 1. Input from STV.

2. See Section 1.3.1 section for location of columns.

3. The axis convention used in the SAP analysis are different from the axis convention that STV used in their analysis as follow:

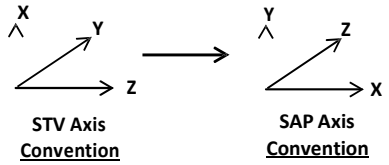

STV Axis Convention

SAP Axis Convention

4. Negative Z is in the gravity direction.

8-4-1-3-3- Seismic Load (E):

Seismic Load From Crane Columns on Foundation:

Seismic Design Category = B Per STV crane reaction force calculations.

→ per ASCE Section 12.5.2 "the design seismic forces are permitted to be applied independently in each of two orthogonal directions and orthogonal interaction effects are permitted to be neglected."

Column No.[2]	Column Reaction on the Foundation due to Seismic Load[1]					
	RX (kips)	RY (kips)	RZ (kips)	MX (kips-ft)	MY (kips-ft)	MZ (kips-ft)
	Seismic in the X Direction[3,4]					
1	26.2	-10.9	-111.5	0	0	0
2	25.5	-18.5	61.9	0	0	0
3	52.3	-1.5	208.9	0	0	0
4	42.8	-8.6	203.6	0	0	0
5	14.5	9.8	64.6	0	0	0
6	17.1	20.4	-106.5	0	0	0
7	0.2	5.2	-167.3	0	0	0
8	0.3	4.2	-153.7	0	0	0
	Seismic in the Y Direction[3,4]					
1	-3.7	29.6	179.8	0	0	0
2	3.5	29.2	191.1	0	0	0
3	-0.8	15.8	73.5	0	0	0
4	0.8	15.4	-73.5	0	0	0
5	-3.6	28.9	-191.1	0	0	0
6	3.8	29.4	-179.8	0	0	0
7	-0.3	15.2	-88.8	0	0	0
8	0.3	15.4	88.7	0	0	0
	Seismic in the Z Direction[3,4]					
1	0.1	-0.4	-39.6	0	0	0
2	-0.1	-0.6	-40.0	0	0	0
3	-0.1	0.1	-31.9	0	0	0
4	0.1	0.1	-20.8	0	0	0
5	-0.1	0.5	-13.1	0	0	0
6	0.1	0.3	-12.5	0	0	0
7	0.1	0.2	-20.6	0	0	0
8	-0.1	0.2	-31.4	0	0	0

Notes: 1. Input from STV.

2. See Section 1.3.1 section for location of columns.

3. The axis convention used in the SAP analysis are different from the axis convention that STV used in their analysis as follow:

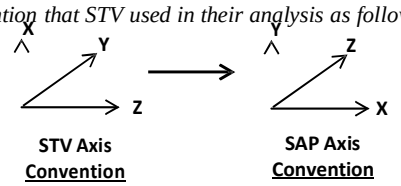

4. Negative Z is in the gravity direction.

8-4-1-4- Load Combinations

LRFD Load Combination per IBC 2009 Sec. 1605.2.1:

LC1 = 1.4 D

LC2 = 1.2 D + 1.6 W

LC2-1 +X Dir. *= 1.2 D + 1.6 [W in +X Direction.]*
LC2-1 -X Dir. *= 1.2 D + 1.6 [W in -X Direction.]*
LC2-2 +Y Dir. *= 1.2 D + 1.6 [W in +Y Direction.]*
LC2-2 -Y Dir. *= 1.2 D + 1.6 [W in -Y Direction.]*

LC3 = 1.2 D + 1.0 E

LC3-1 +X Dir. *= 1.2 D + 1.0 [E in +X Direction] + 1.0 [E in Z Direction] Per IBC Section 1602*
LC3-1 -X Dir. *= 1.2 D + 1.0 [E in -X Direction] + 1.0 [E in Z Direc Per IBC Section 1602*
LC3-2 +Y Dir. *= 1.2 D + 1.0 [E in +Y Direction] + 1.0 [E in Z Direction] Per IBC Section 1602*
LC3-2 -Y Dir. *= 1.2 D + 1.0 [E in -Y Direction] + 1.0 [E in Z Direc Per IBC Section 1602*

LC4 = 0.9 D + 1.6 W

LC4-1 +X Dir. *= 0.9 D + 1.6 [W in +X Direction.]*
LC4-1 -X Dir. *= 0.9 D + 1.6 [W in -X Direction.]*
LC4-2 +Y Dir. *= 0.9 D + 1.6 [W in +Y Direction.]*
LC4-2 -Y Dir. *= 0.9 D + 1.6 [W in -Y Direction.]*

LC5 = 0.9 D + 1.0 E

LC5-1 +X Dir. *= 0.9 D + 1.0 [E in +X Direction] - 1.0 [E in Z Direction] Per IBC Section 1602*
LC5-1 -X Dir. *= 0.9 D + 1.0 [E in -X Direction] - 1.0 [E in Z Direct Per IBC Section 1602*
LC5-2 +Y Dir. *= 0.9 D + 1.0 [E in +Y Direction] - 1.0 [E in Z Direction] Per IBC Section 1602*
LC5-2 -Y Dir. *= 0.9 D + 1.0 [E in -Y Direction] - 1.0 [E in Z Direct Per IBC Section 1602*

ASD Load Combination per IBC 2009 Sec. 1605.3.1:

SC1 = 1.0 D

SC2 = 1.0 D + 1.0 W

SC2-1 +X Dir. *= 1.0 D + 1.0 [W in +X Direction.]*
SC2-1 -X Dir. *= 1.0 D + 1.0 [W in -X Direction.]*
SC2-2 +Y Dir. *= 1.0 D + 1.0 [W in +Y Direction.]*
SC2-2 -Y Dir. *= 1.0 D + 1.0 [W in -Y Direction.]*

SC3 = 1.0 D + 0.7 E

SC3-1 +X Dir. *= 1.0 D + 0.7 [E in +X Direction] + 0.7 [E in Z Dir Per IBC Section 1602*
SC3-1 -X Dir. *= 1.0 D + 0.7 [E in -X Direction] + 0.7 [E in Z Direction] Per IBC Section 1602*
SC3-2 +Y Dir. *= 1.0 D + 0.7 [E in +Y Direction] + 0.7 [E in Z Dire Per IBC Section 1602*
SC3-2 -Y Dir. *= 1.0 D + 0.7 [E in -Y Direction] + 0.7 [E in Z Direction] Per IBC Section 1602*

SC4 = 0.6 D + 1.0 W

SC4-1 +X Dir. *= 0.6 D + 1.0 [W in +X Direction.]*
SC4-1 -X Dir. *= 0.6 D + 1.0 [W in -X Direction.]*
SC4-2 +Y Dir. *= 0.6 D + 1.0 [W in +Y Direction.]*
SC4-2 -Y Dir. *= 0.6 D + 1.0 [W in -Y Direction.]*

SC5 = 0.6 D + 0.7 E

SC5-1 +X Dir. *= 0.6 D + 0.7 [E in +X Direction] - 0.7 [E in Z Dire Per IBC Section 1602*
SC5-1 -X Dir. *= 0.6 D + 0.7 [E in -X Direction] - 0.7 [E in Z Direction] Per IBC Section 1602*
SC5-2 +Y Dir. *= 0.6 D + 0.7 [E in +Y Direction] - 0.7 [E in Z Dire Per IBC Section 1602*
SC5-2 -Y Dir. *= 0.6 D + 0.7 [E in -Y Direction] - 0.7 [E in Z Direction] Per IBC Section 1602*

8-4-2
Timber Pile Analysis

CLIENT	STV	JOB NO.	7897-02
PROJECT	NNSY Hammerhead Crane Study	SHEET	OF
DESIGN FOR	Analysis of Timber Piles (Assuming **1"** reduction in pile dia.)	DESIGNER	R. Alamir — DATE 2/15/13
	Based on LRFD Approach	CHECKER	M. Rashid — DATE 1/2/13

Analysis of Timber Piles (LRFD):

Member Size

unsupported length, ℓ_u = 4.5 ft

butt diameter, d_{max} = 11.0 in

tip diameter, d_{min} = 11.0 in

Support Conditions *NDS 3.7.2 Tapered Columns*

Other support conditions not listed

a = N/A

Assuming 1" reduction in diameter of pile due to corrosion.

Effective Column Length

Buckling Mode: One end fixed, one end free to translation

K_e = 1.20 *NDS Appendix G*

ℓ_e = 5.40 ft *NDS 3.7.1.2*

ℓ_e/d = 5.89 ≤ 50 ? OK *NDS 3.7.1.4*

R_B = 2.58 ≤ 50 ? OK *NDS 3.3.3.7*

Representative Dimensions

d = 11.00 in *NDS 3.7.2 Tapered Columns*

c = 5.50 in

A = 95.03 in^2

I = 718.69 in^4

S = 130.67 in^3

Equivalent Square Column Dimensions

b_{square} = 9.75 in

d_{square} = 9.75 in

Species: Treated Southern Pine

	F_b	F_v	$F_{c\perp}$	F_c	E	E_{min}	
RDV =	2,400	110	250	1,200	1.5E+06	7.9E+05	*NDS Table 6A*
λ =	1.00	1.00	1.00	1.00			*NDS Table N.3: L is from occupancy*
C_t =	1.00	1.00	1.00	1.00	1.00	1.00	*NDS Table 2.3.3: T≤100°F*
C_u =	1.00	1.00	1.00	1.00			*NDS 6.3.5, treated pile*
C_F =	1.00						*d≤13.5", NDS Table 6.3.7*
C_P =				0.99			*see C_P worksheet*
C_{cs} =				1.00			*NDS 6.3.9, assume 1.0 for conservative*
C_b =			1.00				*NDS 3.10.4, assume 1.0 for conservative*
C_{sp} =	0.77			0.80			*NDS Table 6.3.11*
ϕ_b =	0.85						*NDS Table N.2*
ϕ_v =		0.75					*NDS Table N.2*
ϕ_c =			0.90	0.90			*NDS Table N.2*
ϕ_s =						0.85	*NDS Table N.2*
K_F =	2.54	2.88	2.08	2.40		1.76	*NDS Table N.1*

Column Stability Factor

F_{bE} = 213,925 psi

F_c^* = 2,074 psi

F_{cE} = 28,069 psi

c = 0.85 *NDS 3.7.1.5 for round timber poles and piles*

C_P = 0.99

CLIENT	STV	JOB NO.	7897-02
PROJECT	NNSY Hammerhead Crane Study	SHEET	OF
DESIGN FOR	Analysis of Timber Piles (Assuming **1"** reduction in pile dia.)	DESIGNER	R. Alamir DATE 2/15/13
	Based on LRFD Approach	CHECKER	M. Rashid DATE 1/2/13

CHECKING BENDING

	F_b' =	3,992	psi	
	Mn =	43.5	kip-ft	
Max. Moment Demand From SAP	***M_u =***	***14***	***kip-ft Mn?***	***OK***

CHECKING SHEAR

	F_v' =	238	psi	
	Vn =	15.1	kips	
Max. Shear Demand From SAP	***V_u =***	***5,000***	***lbs ≤ Vn?***	***OK***

CHECKING AXIAL COMPRESSION

	F_c' =	2,049	psi	
	Pn =	194.8	kips	
Max. Comp. Demand From SAP	***Pu =***	***47***	***kips ≤ Pn?***	***OK***

COMPRESSION PERPENDICULAR TO GRAIN

$F_{c\perp}'$ = 469 psi
Pn = N/A kips

MODULUS OF ELASTICITY **MODULUS OF ELASTICITY (MIN)**

E' = 1.5E+06 psi E_{min}' = 1.2E+06 psi

CHECKING COMBINED AXIAL COMPRESSION & BENDING LOADING

Applied Axial Load	Pu =	47,000	lbs	*From SAP Analysis*
Axial Compression Stress	f_c =	495	psi	
Eccentricity	e =	0	in	
Eccentric Moment	Me =	0	lb-ft	
Corres. Moment in Major Direction	Mu_{-X} =	5,000	lb-ft	*From SAP Analysis*
Total Moment in Major Direction	Mu_{T-X} =	5,000	lb-ft	
Bending Stress in Major Direction	f_{b1} =	459	psi	
Corres. Moment in Minor Direction	Mu_{-Y} =	14,000	lb-ft	*From SAP Analysis*
Bending Stress in Minor Direction	f_{b2} =	1,286	psi	
NDS Equation 3.9-3		***0.50***	≤	***1.0 ? OK***

CHECKING PILES GEOTECHNICAL CAPACITY

Allowable Bearing Capacity of the Piles	F_G =	40,000	lbs	*Based on Record Drawing P.W. Drawing No 19209*
Max. Axial Comp. Load Demand (ASD)	F_C =	37,000	***lbs ≤***	***F_G ? OK***

CLIENT	STV	JOB NO.	7897-02
PROJECT	NNSY Hammerhead Crane Study	SHEET	OF
DESIGN FOR	Analysis of Timber Piles (Assuming 2" reduction in pile dia.)	DESIGNER	R. Alamir DATE 2/15/13
	Based on LRFD Approach	CHECKER	M. Rashid DATE 1/2/13

Analysis of Timber Piles (LRFD):

Member Size

unsupported length, ℓ_u = 5 ft

butt diameter, d_{max} = 10.0 in

tip diameter, d_{min} = 10.0 in

Support Conditions *NDS 3.7.2 Tapered Columns*

Other support conditions not listed

a = N/A

Assuming 2" reduction I diameter dof pile due to corrosion.

Effective Column Length

Buckling Mode: One end fixed, one end free to translation

K_e = 1.20 *NDS Appendix G*

ℓ_e = 6.00 ft *NDS 3.7.1.2*

ℓ_e/d = 7.20 ≤ 50 ? OK *NDS 3.7.1.4*

R_B = 2.85 ≤ 50 ? OK *NDS 3.3.3.7*

Representative Dimensions

d = 10.00 in *NDS 3.7.2 Tapered Columns*

c = 5.00 in

A = 78.54 in^2

I = 490.87 in^4

S = 98.17 in^3

Equivalent Square Column Dimensions

b_{square} = 8.86 in

d_{square} = 8.86 in

Species: Treated Southern Pine

	F_b	F_v	$F_{c\perp}$	F_c	E	E_{min}	
RDV =	2,400	110	250	1,200	1.5E+06	7.9E+05	*NDS Table 6A*
λ =	1.00	1.00	1.00	1.00			*NDS Table N.3: L is from occupancy*
C_t =	1.00	1.00	1.00	1.00	1.00	1.00	*NDS Table 2.3.3: T ≤100°F*
C_u=	1.00	1.00	1.00	1.00			*NDS 6.3.5, treated pile*
C_F =	1.00						*d≤13.5", NDS Table 6.3.7*
C_P =				0.98			*see C_P worksheet*
C_{cs} =				1.00			*NDS 6.3.9, assume 1.0 for conservative*
C_b =			1.00				*NDS 3.10.4, assume 1.0 for conservative*
C_{sp} =	0.77			0.80			*NDS Table 6.3.11*
ϕ_b =	0.85						*NDS Table N.2*
ϕ_v =		0.75					*NDS Table N.2*
ϕ_c =			0.90	0.90			*NDS Table N.2*
ϕ_s =						0.85	*NDS Table N.2*
K_F =	2.54	2.88	2.08	2.40		1.76	*NDS Table N.1*

Column Stability Factor

F_{bE} = 175,030 psi

F_c^* = 2,074 psi

F_{cE} = 18,790 psi

c = 0.85 *NDS 3.7.1.5 for round timber poles and piles*

C_P = 0.98

CLIENT	STV	JOB NO.	7897-02
PROJECT	NNSY Hammerhead Crane Study	SHEET	OF
DESIGN FOR	Analysis of Timber Piles (Assuming 2" reduction in pile dia.)	DESIGNER	R. Alamir DATE 2/15/13
	Based on LRFD Approach	CHECKER	M. Rashid DATE 1/2/13

CHECKING BENDING

	F_b' =	3,992	psi	
	Mn =	32.7	kip-ft	
Max. Moment Demand From SAP	M_u =	*13*	***kip-ft***	***Mn?*** ***OK***

CHECKING SHEAR

	F_v' =	238	psi	
	Vn =	12.4	kips	
Max. Shear Demand From SAP	V_u =	*5*	***lbs ≤***	***Vn?*** ***OK***

CHECKING AXIAL COMPRESSION

	F_c' =	2,036	psi	
	Pn =	159.9	kips	
Max. Comp. Demand From SAP	***Pu =***	*47*	***kips ≤ Pn?***	***OK***

COMPRESSION PERPENDICULAR TO GRAIN

$F_{c\perp}'$ = 469 psi

Pn = N/A kips

MODULUS OF ELASTICITY **MODULUS OF ELASTICITY (MIN)**

E' = 1.5E+06 psi E_{min}' = 1.2E+06 psi

CHECKING COMBINED AXIAL COMPRESSION & BENDING LOADING

Applied Axial Load	Pu =	47,000	lbs	*From SAP Analysis*
Axial Compression Stress	f_c =	598	psi	
Eccentricity	e =	0	in	
Eccentric Moment	Me =	0	lb-ft	
Corres. Moment in Major Direction	Mu_{-X} =	5,000	lb-ft	*From SAP Analysis*
Total Moment in Major Direction	Mu_{T-X} =	5,000	lb-ft	
Bending Stress in Major Direction	f_{b1} =	611	psi	
Corres. Moment in Minor Direction	Mu_{-Y} =	13,000	lb-ft	*From SAP Analysis*
Bending Stress in Minor Direction	f_{b2} =	1,589	psi	
NDS Equation 3.9-3		***0.66***	≤	***1.0 ?*** ***OK***

CHECKING PILES GEOTECHNICAL CAPACITY

Allowable Bearing Capacity of the Piles	F_G =	40,000	lbs	*Based on Record Drawing P.W. Drawing No 19209*
Max. Axial Comp. Load Demand (ASD)	F_C =	37,000	***lbs ≤***	***F_G ?*** ***OK***

8-4-3
Stability Analysis of the Foundation

8-4-3-1- FOUNDATION STABILITY

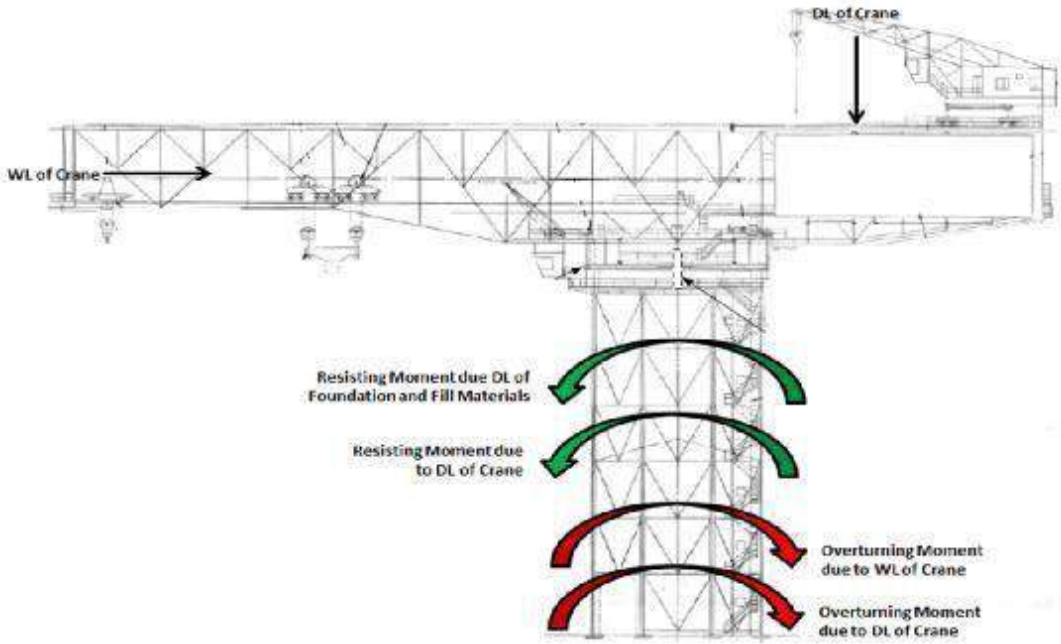

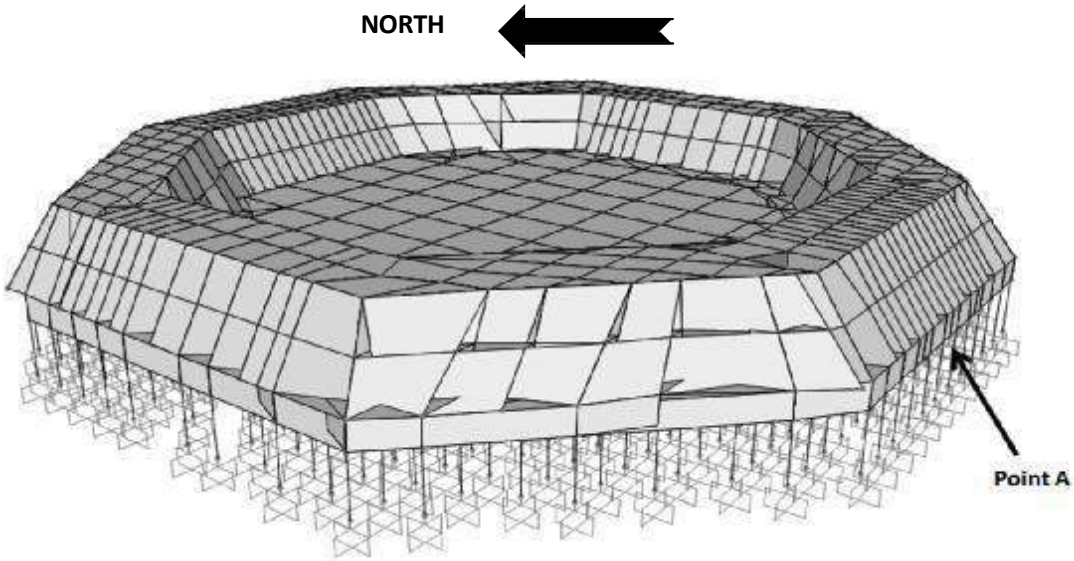

8-4-3-1-1- In X Direction (East-West)

Weight of Concrete Cap =	2,900	kips	
Weight of Fill Material =	1,600	kips	
Dead Weight of the Crane =	4,547	kips	Input from STV
Total Vertical Load, W_T =	9,047	kips	
DL Eccentricity of the Crane in E-W Dir. =	0.0	ft	
Total Width of the Foundation =	73	ft	
Total Resistance Moment against Overturning about Point A, M_{R-X} =	*330,216*	*kips-ft*	
Total Wind Force on the Crane in X Dir. =	394	kips, Input from STV	
Point of Wind Load Application in Z Dir. =	144.7	ft above Top of the Cap, Input from STV	
Cap Thickness =	9.7	ft	
Total Overturning Moment about Point A, M_{OT-X} =	*60,834*	*kips-ft*	
Factor of Safety against Overturning =	***5.4***	→	***F.O.S > 1.5, O.K.***
			Satisfy IBC 2009 Section 1807.2.3

8-4-3-1-2- In Y Direction (North-South)

Weight of Concrete Cap =	2,900	kips	
Weight of Fill Material =	1,600	kips	
Dead Weight of the Crane =	4,547	kips	Input from STV
Total Vertical Load, W_T =	9,047	kips	
DL Eccentricity of the Crane in N-S Dir. =	9.9	ft	Input from STV
Total Width of the Foundation =	73	ft	
Total Resistance Moment against Overturning about Point A, M_{R-Y} =	*330,216*	*kips-ft*	
Total Wind Force on the Crane in Y Dir. =	244	kips, Input from STV	
Point of Wind Load Application in Z Dir. =	142.0	ft above Top of the Cap, Input from STV	
Cap Thickness =	9.7	ft	
Total Overturning Moment about Point A, M_{OT-Y} =	*82,030*	*kips-ft*	
Factor of Safety against Overturning =	***4.0***	→	***F.O.S > 1.5, O.K.***
			Satisfy IBC 2009 Section 1807.2.3

Client: STV	Job No:	7897-02	
Project: NNSY Hammerhead Crane Study	Sheet:	of	
Design For: Foundation Stability	Designer: R. Alamir	Date:	02/15/13
	Checker: T. Lee	Date:	01/22/13

8-4-3-2- COMPRESSION LOAD ON PILES assuming Piles have No Tensile Capacity

8-4-3-2-1- Foundation Section Properties (Octagon)

Total Width of the Foundation, H =	73.0	ft
a =	30.2	ft
Total Area of the Foundation, A =	4,412	ft^2
Total Moment of Inertia, I =	1,561,903	ft^4
Total Section Modulus of the Foundation, Z =	42,403	ft^3
b =	17.4	ft
h =	42.0	ft

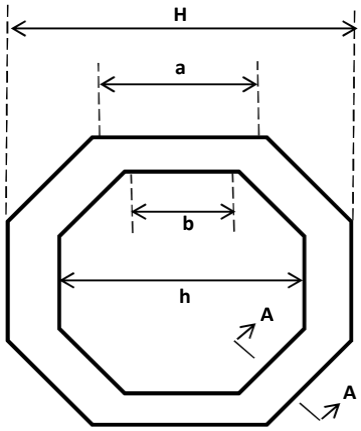

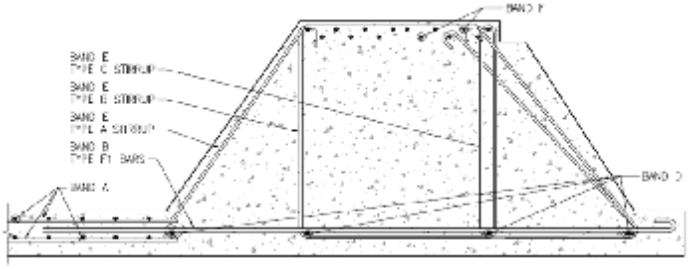

Section A-A

8-4-3-2-2- Maximum Compression Loads in the piles due to the WL-X

H / 6 =	12.2	ft	
Eccentricity w/ respect to CL of the Footing in X Dir., e_X =	6.7	ft = H/2 - (M_{R-X} - M_{OT-X}) / W_T	
→ ex < H/6 →	Resultant lies within the middle third of the base, the pressure on the base is all compression.		
→ P = W_T / A ± M_{OT-X} / Z			
P_{max-X} =	3.49	ksf	
P_{min-X} =	0.62	ksf	
Max. Tributary Width of the Piles at East Edge, w =	2.5	ft	
Max. Tributary Length of the Piles at East Edge, ℓ =	5.00	ft	
Max. Pile Axial Compression Load, $F_{max.}$ =	43.6	kips = P_{max-X} * w * ℓ	
Bearing Capacity of the Piles, F_G =	40.0	kips	P.W. Drawing No 19209, with Factor of Safety of 2.0
Demand to Capacity Ratio, DCR =	***1.09***	**O.K.**	

As indicated in the drawings , the geotechnical bearing capacity of the timber piles is 40 kips with a factor of safety of 2 to 1. The compression load in the piles under short term extreme wind load in East-West direction is 43.6 kips, which is about 10% above the allowable pile bearing capacity, which reduces the factor of safety from 2.0 to 1.83. Under design load combinations using short term extreme wind, the slight reduction in the factor of safety is acceptable.

8-4-3-2-3- Maximum Compression Loads in the piles due to the WL-Y

H / 6 =	12.2	ft	
Eccentricity w/ respect to CL of the Footing in Y Dir., e_Y =	9.1	ft = H/2 - (M_{R-Y} - M_{OT-Y}) / W_T	
→ e_Y < H/6 →	Resultant lies within the middle third of the base, the pressure on the base is all compression.		
→ P = W_T / A ± M_{OT-Y} / Z			
P_{max-Y} =	3.98	ksf	
P_{min-Y} =	0.12	ksf	
Max. Tributary Width of the Piles at North Edge, w =	2.67	ft	Record Drawing "P.W. 36703"
Max. Tributary Length of the Piles at North Edge, ℓ =	4.50	ft	Record Drawing "P.W. 36703"
Max. Pile Axial Compression Load, $F_{max.}$ =	47.8	kips = P_{max-Y} * w * ℓ	
Bearing Capacity of the Piles, F_G =	40.0	kips	Provided by Geotech.
Demand to Capacity Ratio, DCR =	***1.20***	**O.K.**	

As indicated in the drawings , the geotechnical bearing capacity of the timber piles is 40 kips with a factor of safety of 2 to 1. The compression load in the piles under short term extreme wind load in North-South direction is 47.8 kips, which is about 20% above the allowable pile bearing capacity, which reduces the factor of safety from 2.0 to 1.68. Under design load combinations using short term extreme wind, the slight reduction in the factor of safety is acceptable.

8-4-4
Concrete Cap Analysis

8-4-4- CONCRETE CAP ANALYSIS

8-4-4-1- Checking Flexural and Shear Strength

- Since the piles are spaced closed to each other, the concrete foundation is analyzed as a "beam on elastic foundation" using piles axial stiffness as spring constant (K)

Beam Geometry:

Width of the Thick Part of the Foundation at Top =	6.0	ft	72	in
Width of the Thick Part of the Foundation at Bottom =	13.8	ft	165	in
Cap Thickness, Th =	9.7	ft =	116	in
Distance between Crane Columns, L =	27.7	ft =	332	in
Pile Stiffness, k =	258.0	kips/in, See the analysis report		
No. of Piles on One row under the Cap, n =	3			
Total Piles Stiffness, K =	774	kips/in = k * n		
Pile Spacing =	2.5	ft = space between springs in the SAP model		
Rebar Cover =	6.0	in	rebars are located above the pile cut-off elevation of +91.5 ft	
Length of the Column Base Plates, l =	4.7	ft	= Length of the Applied Load	

Governing Load Combinations:

LC2 = 1.2 Dead Load of the Cap + 1.2 DL_C + 1.6 WL_C

Beam Demand & Capacity:

Max. Factored +ve Moment Demand, M^+_u =	150	kips-ft	From SAP Analysis
Moment Capacity of the Beam, fM_n =	3,830	kips-ft	Base on ACI 318-08, See the following pages
Moment Demand to Capacity Ration, DCR =	***0.04***	***< 1.0, O.K.***	

Max. Factored -ve Moment Demand, M^-_u =	4,500	kips-ft	From SAP Analysis
Moment Capacity of the Beam, fM_n =	5,080	kips-ft	Base on ACI 318-08, See the following pages
Moment Demand to Capacity Ration, DCR =	***0.89***	***< 1.0, O.K.***	

Max. Factored Shear Demand, V_u =	620	kips	From SAP Analysis
Shear Capacity of the Beam, fV_n =	*1,460*	kips	Base on ACI 318-08, See the following pages
Shear Demand to Capacity Ration, DCR =	***0.42***	***< 1.0, O.K.***	

PIER G

BERTH Nº 14

BERTH Nº 13

COAL BUNKERS

Q WATLII 4T HIr./'1 TIDII
%.I (/1 .8S" A.M 4.-Z9-Jtf/

STIRRUPS

TIII KV..114 (. P/4.$ S'KOI(I., IINPJ!It .... _..

.101 _ 'NI OCTIIIiOII II TNI N/A11/IIOIJ
tfrTI.IVIII/rD. rNI AII'.v PILIS J'NAJ.:. II
JPA(;8D IILTwrrIII/ YNI I.OSTII/(/ A'LE:S
SO AS TO AVOID INTERFERENCE.

IIERTH Ng 12

IIOWAN

'JV NU.&-

N' =

LOCATI ON PLAN

NO.	.0.Ktt t'C	t.'r<:H.
I	10	n
Z.	15	u
:>	IZ	

., DETAIL .E.

SCI'-'E . ∅.o¹o·

ECTION H·()'

SU.It .- ,....

TOP

-I Z- 8' Y/TR.C'/£O CJ.AY

/()().7.0

/«? fJ' .,,- • $il·o·

IS·

&.t.fJ/. – 91.0 –

'TC e...Ttto4

5ECTION B-5

:SC6.\.· : t' '

B

..7 Z:
O

-en

NOT "1'0 - SCA.LE-

(I.

.SECTION D·D

/?Er'PENCI! PtAN .'- FOA? AD.IOJN/NQ .$IAZJ
- EE Y'A<€0 / POCK DIi:IIWIA/<fi .Alo. /J" 42'1. .

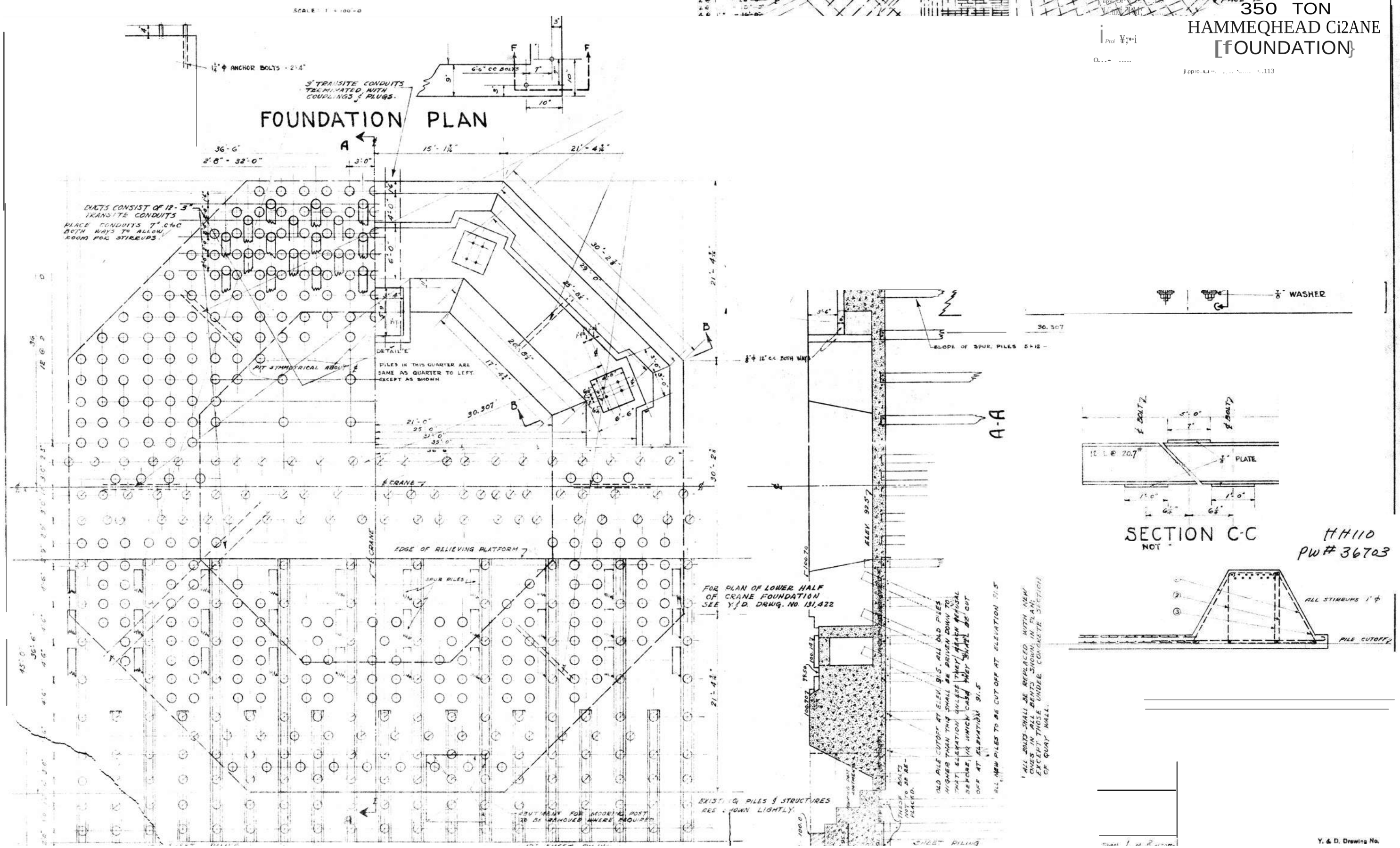
NAVY DEPARTMENT
U. S. NAVY YARD
NEW YORK N.Y.
350 TON
HAMMEQHEAD Ci2ANE
[fOUNDATION}
FOUNDATION PLAN
SCALE: 1" = 100'-0"
1¼" ϕ ANCHOR BOLTS - 2'-4"
3" TRANSITE CONDUITS TERMINATED WITH COUPLINGS & PLUGS.
6'-6" CC BOLTS
DUCTS CONSIST OF 12-3" TRANSITE CONDUITS
PLACE CONDUITS 7" C to C BOTH WAYS TO ALLOW ROOM FOR STIRRUPS.
PIT SYMMETRICAL ABOUT ℄
DETAIL "E"
PILES IN THIS QUARTER ARE SAME AS QUARTER TO LEFT EXCEPT AS SHOWN
℄ CRANE
EDGE OF RELIEVING PLATFORM
SPUR PILES
FOR PLAN OF LOWER HALF OF CRANE FOUNDATION SEE Y.&D. DRWG. NO. 131,422
EXISTING PILES & STRUCTURES ARE SHOWN LIGHTLY.
ABUTMENT FOR MODERN POST TO BE REMOVED WHERE REQUIRED
SLOPE OF SPUR PILES 5:12
A-A
7/8" WASHER
SECTION C-C
NOT
PLATE
ALL STIRRUPS 1" ϕ
PILE CUTOFF
HH110
PW# 36703
Y. & D. Drawing No.

				PAGE	OF
CLIENT:	STV	JOB NO.:	7897-02		
PROJECT:	NNSY Hammerhead Crane Study	DESIGNER:	R. Alamir	DATE:	Feb-13
SUBJECT:	Concrete Cap Analysis	CHECKER:		DATE:	

BEAM ~~SECTION~~ PROPERTIES

bw		Ecu		fy =	331 ksi
depth =	116 in	E	ksi	Ey	0.00114
f'c =	3 ksi			Es	29000 ksi
Ee'	0.00199	Total Slot Width		de cover	3.00 in
q	0.900	Total Slot Depth		side cover	3.00 in

REINFORCEMENT

FLEXURAL REINFORCEMENT (Load reinforcing input from top to bottom)

No. of Layers = 2

Layer	No. of Bars	Bar Size (#5, #6, etc)	As (in²)	dc (cover to center) (in)
1	14	#10	17.78	3
2	14	#9	14.00	110

If "" — N/A then provided reinforcement meet ACI 318-08 10.5.3.

Asmin, top	113.00	in²
Asmin, bottom	N/A	in²
Asmax, top	648.22	in²
Asmax, bottom	665.90	in²

CALCULATED MOMENTS & SUMMARY OF RESULTS

ULTIMATE VALUES:

Calculated Capacity

++Mn	3834.80	k-ft
-+Mn	5082.50	k-ft

Factored Moments from Analysis

+Mu max =	150.00	k-ft
-Mu max =	4500.00	k-ft

SERVICE VALUES:

Calculated Crack Widths

Gergley-Lutz AASHTO 4th Ed.

	Eqtn	5.7.3.4	
+<11	0.0000	0.0000	in
	0.0000	0.0000	in

Service Moments from Analysis

+Ms... = k-ft

-Ms... = k-ft

Tolerable Crack Widths

Allow, bottom =	0.0071	in
Allow, top =	0.007	in

ConcBeam (ACI 318-08) - Cap-7897-02 - 2012-02-_AP

				PAGE CF
CLIENT:	STV	JOB NO.:	7897-02	
PROJECT:	NNSY Hammerhead Crane Study	DESIGNER:	R. Alamir	DATE:IFeb-13
SUBJECT:	Concrete Cap Analysis	CHECKER:		DATE:

E\(AI.tJATIQN OF PQSITT\!E MQMENT CAPACITY·

UITIMATE CAPACITY

Mu = 150.00 k-ft (applied)

CONCRETE COMPRESSION:

c = 2.392 ln "d" 110 in

a = $_1$c = 2.033 ln z 1.016 in

Cc = 0.85 f_c'*b_w*a = 855.4 kips (Crane Rail Slot is removed)

FORCES IN REINFORCING: COMPRESSION, '+' TENSION)

Layer	As (in")	dfrom top (in)	Strain fs	Stress fs (ksi)	Force (kips)	Moment (k-in)
1	17.78	3	0.000763	22.12	393.4	1180.1
2	14.00	110	0.134974	33.00	462.0	50820.0

FORCE EQUILIBRIUM:

C 855.38 kips

T = 855.38 kips

NOMINAL MOMENT CAPACITY:

$Mn = 3834.80 k-ft

CHECK CBACK WIDTH FOR SERVICEABILITY

de 3.564 ln Ms, k-ft (applied)

m 14 (No. of bars) 1.061

A = 2d_c*b_w/m = 84.0 ln^2 $_s$ 1.078 AASHTO 4th Ed. – 5.7.3.4

Spacing = 12.144 in/bars

STRESS/STRAIN COMPATIBILITY:

c 11.924 in A #N/A

f:c, max = 0.00000 B #N/A

Cc = 0.5(fc, max * c * b_w) 0.00 kips fc, 0.000 ksi

f_B 0.00000 fc, slot 0.000 ksi

"d" 110 In z = 3.975 in

L yer	As (ln" I	dfrom top (in)	Strain fs	Stress fs (ksi)	Force (kips)	Moment (k-in)
1	17.78	3	0.000000	0.00	0.0	0.0
2	14.00	110	0.000000	0.00	0.0	0.0

FORCE EQUILIBRIUM:

C 0.00 kips

T = 0.00 kips

SERVICE MOMENT CAPACITY:

Ms = 0.00 k-ft (capacity)

CRACK WIDTH:

Gergley-Lutz Equation

ω = 0.076β*f_s*(d_c*A)$^{1/3}$/1000 = 0.0000 in

(!)allow = 0.007 in

AASHTO 4th Ed. - 5.7.3.4

roe = 0.017*(S+2*de I/700* s*fss 0.0000 in

ConcBeam (ACI 318-08)-Cap-7897-02-20130214 AP

				PAGE CF
CLIENT:	STV	JOB NO.:	7897-02	
PROJECT:	NNSY Hammerhead Crane Study	DESIGNER:	R. Alamir	DATE:IFeb-13
SUBJECT:	Concrete Cap Analysis	CHECKER:		DATE:

E\(AL¡JATIQN OF NEGATT\!E MQMENT CAPACITY·

UITIMATE CAPACITY

Mu = 4500.00k-ft (applied)

CONCRETE COMPRESSION:

c = 2.932 ln "d" 113 in

a = 1c = 2.493 ln

Cc = 0.85 fc'*bw*a = 1048.7 kips

FORCES IN REINFORCING: COMPRESSION, '+' TENSION)

Layer	As (in")	dfrom bot (in)	Strain fs	Stress fs (ksi)	Force (kips)	Moment (k-in)
2	14.00	6	0.003138	33.00	462.0	2772.0
1	17.78	113	0.112605	33.00	586.7	66301.6

FORCE EQUILIBRIUM:

C 1048.74 kips

T = 1048.74 kips

NOMINAL MOMENT CAPACITY:

$Mn = 5082.4952 k-ft

CHECK CBACK WIDTH FOR SERVICEABILITY

de = 3.635 ln Ms, k-ft (applied)

m = 14 (No. of bars) 1.031

A 2dc*(bw-slot)/m = 85.7 ln² s 1.038 AASHTO 4th Ed. – 5.7.3.4

Spacing = 12.133 in

STRESS/STRAIN COMPATIBILITY:

c 14.705 in A #N/A

f:c, max = 0.00000 B #N/A

Cc = 0.5(fc, max * c * b..) 0.00 kips fc, 0.000 ksi

fs = 0.00000 "d" 113 in

L yer	As (in"I	dfrom bot (in)	Strain fs	Stress fs (ksi)	Force (kips)	Moment (k-in)
2	14.00	6	0.000000	0.00	0.0	0.0
1	17.78	113	0.000000	0.00	0.0	0.0

FORCE EQUILIBRIUM:

C 0.00 kips

T = 0.00 kips

SERVICE MOMENT CAPACITY:

Ms = 0.00 k-ft (capacity)

CRACK WIDTH:

Gergley Lutz Equation

ω = 0.076β*fs*(dc*A)^1/3/1000 = 0.0000 in

(!)allow = 0.007 in

AASHTO 4th Ed. – 5.7.3.4

roe = 0.000 in

0.017*(S+2*de I/700*s*fss

					PAGE OF
CLIENT:	STV	JOB NO.:	7897-02		
PROJECT:	NNSY Hammerhead Crane Study	DESIGNER:	R. Alamir	DATE:	Feb-13
SUBJECT:	Concrete Cap Analysis	CHECKER:		DATE:	

B§NM SIGT±ON PROPJRT±§S

b.., 165 in
depth 116 in
f_c' = 3 ksi
fy = 33 ksi

Ln = in
Beam Shear Design: NORMAL BEAM SHEAR

RF.TNFORCE:ME:N'r

SHEAR REINFORCEMENT:

VERTICAL:
No. of S irrup Legs
Bar Size (#4,#5,etc) =
Stirrup Spacing = in
Avis in²/ft

<A..Is) · qd None in²/ft
**(A,/S)min None in²/ft
24.00 in

*HORIZONTAL:
No. of Bars Ea. Layer =
Bar Size (#4,#5,etc) =
Horiz. Bar Spacing = in
'Avh/$2 = #N/A in²/ft

**$(A_{vh}/s_2)_{min}$ N/A
S ax N/A in

TOTAL SHEAR REINFOCEMENT AA'riO (ACI 318-08 A.3.3.1): (DEEP' BEAM St-lEAR DESIGN)
Angle of inclination =l 5.00l (5.0 <= y_1 <= 65.0)
EA.dbs (sin Ytl = N/A

APPLIED SHEAR AND MOMENTS & SUMMARY OF .RESIJ:LTS

ULTIMATE VALUES:
tvn = 1476.20 kips
vu..,. 620.00 kips
MUv 4500.00 k-ft

Notes: * Bottom fl xura!r inforcement must be fully devdoped at supports per code requirement$ (AC ! 318-08 A.4 .3).

** For Deep Beam Shear Design, per ACI 318-08 11.1.6, "It ehall be permitted to provide reln!orcement satisfying A.3.3 instead of the minimum-· specii'1ed in 11.7.4 U.7.5."

This analysis does not include a design check or the stres$e$ a $oclated with the tension tie that would be a part of Strut-& Tie Modeling as reinforcement for crack control in flexural des gn typ1cally contrOl$.

EVALUATION OF SHEAR CAPACITY·

APPLIED SHEAR = 620 kips ASSOC. :-lOMENT 4500 k-ft

NORMAL BEAM SHEAR CAPACITY : !ACl 318-08 J1.2.2.11

Vc = [1.9*(f'.,l''+2500pw(Vu*d/Mu)]+b,.*d 1968.27 kips

Vc <• 3.5(f'.,l'' bw'd 3479.41 kips

(Vu*d/Mu)< 1.O- 1.0

Pw = As/ (bw•d) 0.0018

STIRRUP REINFORCEMENT SHEAR CAPACITY : (ACI 318-08 11.4.7.2)

(Ajslr'''d = (Vu - Vc)/(fyd) None in^2/ft

Vs Ay/s (fy'dl kips

MINIMUM REINFORCEMENT : (ACI 318-08 11.4.6)

(l'.y/Slmtn = 0.75*(f'.,) *bwlfy (>= SO*bwlfyl None in $^2/ft$

Smax = MIN(d/2, 24in) 24.00 in (ACI 318-08 **11.4.5.1**)

ULTIMATE SHEAR CAPACITY :

cj>Vn cj>(Vc + Vs) a 1476.20 kips

DEEP BEM SHEAR CAPACITY : <ACI 318-08 11.71

Ln/depth 4.31

MAXIMUM SHEAR STRENGTH LIMITATION : {ACI 318-08 11.7.3)

Vn_{max} <= $10*(f'_c)^{½}*b_w*d$ = 9941.16 kips

MINIMUM REINFORCEMENT : (ACI 318-08 11.7.4 & 11.7.5)

(Ay/sllf>in 0.0025...bw a 4.950 ln^2/ft

$s_{o.\_}$ = MIN (d/5 , 12in) = 12.00 in

(A._h/s_2 lnnn = 0.0015..b,. 2.970 in $^2/ft$

s2mo, a MIN(d/5, 12in) • 12.00 in

CHECK WORST CASE COMBINED SHEAR REINFORCEMENT RATIO: (ACI 318-08 A.3.3.1)

y, = 5.00 Degrees BS Degrees

HORIZON1'AL SHEAR REINFORCEMENT RA'I'IO:

$A_{vh}/bs_2(\sin \gamma_2)$ = #N/A

VERTICAL SHEAR REINFORCEMENT RATIO :

Av/bs(sin y1l

:EA,Jbs (sin Yil • #N/A #N/A

8-4-4-2 - Checking Bearing Stress under the Columns

Width of the Column's Base Plate, W =	4.33	ft	As-built dwg. "Y & D Drawing No. 131,389
Length of the Column's Base Plate, L =	4.67	ft	As-built dwg. "Y & D Drawing No. 131,389
Area of the Column's Base Plate, A =	20.22	ft^2	= L * W
Max. Axial Comp. Load due to the Dead Load of the Crane on One Column, DL_C =	919	kips	
Max. Axial Comp. Load due to the Wind Load of the Crane on One Column, WL_C =	434	kips	
Max. Total Axial Load on one Column, F =	1,353	kips	= $DL_C + WL_C$
Max. Bearing Pressure under Base Plates, P =	***464.6***	***psi***	***= F / A***
Specified Compressive Strength of Concrete, f'_c =	***3,000***	***psi***	

→ $P < f'_c$ → O.K. DCR = 0.15

8-4-5
SAP2000 Analysis Output

8-4-5-1
Pile Forces - 1” Diameter Degradation

TABLE: Element Forces - Frames									
Frame	Station	OutputCase	CaseType	P	V2	V3	T	M2	M3
Text	ft	Text	Text	Kip	Kip	Kip	Kip-ft	Kip-ft	Kip-ft
811	4.5	LC2-1 -X Dir.	Combination	-17.908	-0.497	-2.952	1.764E-15	13.2829	2.2343
646	4.5	LC2-1 -X Dir.	Combination	-16.75	-0.381	-2.948	-4.054E-14	13.2653	1.7148
601	4.5	LC2-1 -X Dir.	Combination	-4.383	0.786	-2.948	5.586E-15	13.2652	-3.5378
604	4.5	LC2-1 -X Dir.	Combination	-6.971	0.55	-2.946	-4.187E-14	13.2571	-2.4733
799	4.5	LC2-1 -X Dir.	Combination	-13.165	-0.034	-2.946	0	13.2558	0.154
805	4.5	LC2-1 -X Dir.	Combination	-15.555	-0.265	-2.946	0	13.2548	1.1945
793	4.5	LC2-1 -X Dir.	Combination	-10.732	0.2	-2.945	0	13.2541	-0.8979
606	4.5	LC2-1 -X Dir.	Combination	-9.462	0.317	-2.945	-2.252E-15	13.2537	-1.426
610	4.5	LC2-1 -X Dir.	Combination	-14.347	-0.15	-2.945	5.327E-16	13.2528	0.6747
731	4.5	LC2-1 -X Dir.	Combination	-6.236	0.668	-2.894	0	13.0209	-3.0043
739	4.5	LC2-1 -X Dir.	Combination	-8.76	0.433	-2.893	3.076E-15	13.0199	-1.9481
601	4.5	LC4-1 -X Dir.	Combination	-0.704	0.789	-2.873	5.607E-15	12.9285	-3.5508
604	4.5	LC4-1 -X Dir.	Combination	-3.242	0.551	-2.87	-4.078E-14	12.914	-2.4773
811	4.5	LC4-1 -X Dir.	Combination	-14.426	-0.5	-2.868	1.775E-15	12.9048	2.2486
606	4.5	LC4-1 -X Dir.	Combination	-5.73	0.316	-2.867	-2.247E-15	12.902	-1.4234
793	4.5	LC4-1 -X Dir.	Combination	-7.008	0.198	-2.867	0	12.8998	-0.8932
799	4.5	LC4-1 -X Dir.	Combination	-9.485	-0.036	-2.866	0	12.8966	0.1635
646	4.5	LC4-1 -X Dir.	Combination	-13.202	-0.384	-2.865	-3.935E-14	12.8928	1.7295
610	4.5	LC4-1 -X Dir.	Combination	-10.706	-0.153	-2.865	5.421E-16	12.8904	0.6866
805	4.5	LC4-1 -X Dir.	Combination	-11.953	-0.269	-2.864	0	12.888	1.2083
886	4.5	LC2-1 -X Dir.	Combination	-20.196	-0.672	-2.86	0	12.8705	3.0247
885	4.5	LC2-1 -X Dir.	Combination	-19.184	-0.556	-2.854	-4.254E-14	12.8442	2.5008
880	4.5	LC2-1 -X Dir.	Combination	-18.129	-0.44	-2.849	-1.564E-15	12.8212	1.9806
879	4.5	LC2-1 -X Dir.	Combination	-16.997	-0.324	-2.845	0	12.8047	1.4597
874	4.5	LC2-1 -X Dir.	Combination	-15.835	-0.209	-2.844	7.415E-16	12.7962	0.9393
873	4.5	LC2-1 -X Dir.	Combination	-14.671	-0.093	-2.843	0	12.7948	0.4183
777	4.5	LC2-1 -X Dir.	Combination	-5.531	0.787	-2.843	5.589E-15	12.7941	-3.5398
608	4.5	LC2-1 -X Dir.	Combination	-12.94	0.082	-2.843	4.04E-14	12.793	-0.3685
789	4.5	LC2-1 -X Dir.	Combination	-10.53	0.316	-2.842	-2.248E-15	12.7872	-1.4234
783	4.5	LC2-1 -X Dir.	Combination	-8.048	0.55	-2.841	0	12.7847	-2.4728
720	4.5	LC2-1 -X Dir.	Combination	-4.418	0.908	-2.835	0	12.7569	-4.0844
731	4.5	LC4-1 -X Dir.	Combination	-2.444	0.669	-2.818	0	12.6796	-3.0126
739	4.5	LC4-1 -X Dir.	Combination	-4.938	0.433	-2.816	3.077E-15	12.6704	-1.9489
730	4.5	LC2-1 -X Dir.	Combination	-7.331	0.668	-2.789	-4.747E-15	12.5522	-3.0064
738	4.5	LC2-1 -X Dir.	Combination	-9.821	0.433	-2.789	0	12.5513	-1.9487
886	4.5	LC4-1 -X Dir.	Combination	-16.711	-0.675	-2.773	0	12.4798	3.0365
885	4.5	LC4-1 -X Dir.	Combination	-15.597	-0.559	-2.769	-4.133E-14	12.4596	2.5139
777	4.5	LC4-1 -X Dir.	Combination	-1.682	0.79	-2.768	5.611E-15	12.455	-3.5537
880	4.5	LC4-1 -X Dir.	Combination	-14.455	-0.443	-2.765	-1.575E-15	12.4434	1.9946
816	4.5	LC2-1 -X Dir.	Combination	-21.175	-0.729	-2.765	0	12.4404	3.2812
783	4.5	LC4-1 -X Dir.	Combination	-4.148	0.55	-2.764	0	12.4385	-2.4767
608	4.5	LC4-1 -X Dir.	Combination	-9.065	0.08	-2.763	3.927E-14	12.4337	-0.3617
789	4.5	LC4-1 -X Dir.	Combination	-6.623	0.316	-2.763	-2.245E-15	12.4331	-1.4217
879	4.5	LC4-1 -X Dir.	Combination	-13.258	-0.327	-2.763	0	12.4326	1.4736
873	4.5	LC4-1 -X Dir.	Combination	-10.844	-0.095	-2.762	0	12.4311	0.4287
874	4.5	LC4-1 -X Dir.	Combination	-12.047	-0.212	-2.762	7.514E-16	12.4292	0.9518
720	4.5	LC4-1 -X Dir.	Combination	-0.595	0.912	-2.761	0	12.4223	-4.1048
599	4.5	LC2-1 -X Dir.	Combination	-20.346	-0.616	-2.759	0	12.4176	2.7706
812	4.5	LC2-1 -X Dir.	Combination	-19.409	-0.499	-2.754	0	12.3922	2.2476
571	4.5	LC2-1 -X Dir.	Combination	-18.36	-0.383	-2.749	1.362E-15	12.3687	1.7252
806	4.5	LC2-1 -X Dir.	Combination	-17.25	-0.267	-2.745	0	12.3536	1.2036
570	4.5	LC2-1 -X Dir.	Combination	-16.122	-0.151	-2.744	-5.379E-16	12.3479	0.6813
800	4.5	LC2-1 -X Dir.	Combination	-15.015	-0.035	-2.744	0	12.3459	0.1578
794	4.5	LC2-1 -X Dir.	Combination	-12.755	0.199	-2.741	1.415E-15	12.3327	-0.8964
568	4.5	LC2-1 -X Dir.	Combination	-11.563	0.317	-2.739	2.249E-15	12.3248	-1.4244

SAP Output-Pile Forces-Linear Analysis-Pinned Column Connection-20130214

TABLE: Element Forces - Frames									
Frame	Station	OutputCase	CaseType	P	V2	V3	T	M2	M3
982	4.875	LC4-1 -X Dir.	Combination	-13.311	1.608	-3.194	0.1709	7.946	-7.7261
982	3.25	LC4-1 -X Dir.	Combination	-13.275	1.592	-3.194	0.1709	2.7558	-5.1261
982	3.25	LC4-1 -X Dir.	Combination	-13.275	1.592	-3.194	0.1709	2.7558	-5.1261
982	2.4375	LC4-1 -X Dir.	Combination	-13.257	1.585	-3.194	0.1709	0.1607	-3.8353
982	1.625	LC4-1 -X Dir.	Combination	-13.238	1.577	-3.194	0.1709	-2.4344	-2.5507
982	1.625	LC4-1 -X Dir.	Combination	-13.238	1.577	-3.194	0.1709	-2.4344	-2.5507
982	0	LC4-1 -X Dir.	Combination	-13.202	1.562	-3.194	0.1709	-7.6246	0.00001434
982	4.875	LC2-1 -X Dir.	Combination	-16.708	1.777	-3.154	0.1619	7.8714	-8.5133
982	3.25	LC2-1 -X Dir.	Combination	-16.659	1.756	-3.154	0.1619	2.7467	-5.6427
982	3.25	LC2-1 -X Dir.	Combination	-16.659	1.756	-3.154	0.1619	2.7467	-5.6427
982	2.4375	LC2-1 -X Dir.	Combination	-16.635	1.746	-3.154	0.1619	0.1843	-4.2197
982	1.625	LC2-1 -X Dir.	Combination	-16.611	1.736	-3.154	0.1619	-2.378	-2.8049
982	1.625	LC2-1 -X Dir.	Combination	-16.611	1.736	-3.154	0.1619	-2.378	-2.8049
982	0	LC2-1 -X Dir.	Combination	-16.562	1.716	-3.154	0.1619	-7.5027	0.000018
811	4.5	LC2-1 -X Dir.	Combination	-17.908	-0.497	-2.952	1.764E-15	13.2829	2.2343
811	3	LC2-1 -X Dir.	Combination	-17.86	-0.497	-2.952	-1.764E-15	8.8552	1.4896
811	3	LC2-1 -X Dir.	Combination	-17.86	-0.497	-2.952	1.764E-15	8.8552	1.4896
811	2.25	LC2-1 -X Dir.	Combination	-17.836	-0.497	-2.952	-1.764E-15	6.6414	1.1172
811	1.5	LC2-1 -X Dir.	Combination	-17.811	-0.497	-2.952	0	4.4276	0.7448
811	1.5	LC2-1 -X Dir.	Combination	-17.811	-0.497	-2.952	-1.764E-15	4.4276	0.7448
811	0	LC2-1 -X Dir.	Combination	-17.763	-0.497	-2.952	0	-1.11E-14	3.331E-17
646	4.5	LC2-1 -X Dir.	Combination	-16.75	-0.381	-2.948	-4.054E-14	13.2653	1.7148
601	4.5	LC2-1 -X Dir.	Combination	-4.383	0.786	-2.948	5.586E-15	13.2652	-3.5378
646	3	LC2-1 -X Dir.	Combination	-16.701	-0.381	-2.948	4.054E-14	8.8435	1.1432
646	3	LC2-1 -X Dir.	Combination	-16.701	-0.381	-2.948	-4.054E-14	8.8435	1.1432
601	3	LC2-1 -X Dir.	Combination	-4.334	0.786	-2.948	-5.586E-15	8.8434	-2.3586
601	3	LC2-1 -X Dir.	Combination	-4.334	0.786	-2.948	5.586E-15	8.8434	-2.3586
601	2.25	LC2-1 -X Dir.	Combination	-4.31	0.786	-2.948	-5.586E-15	6.6326	-1.7689
646	2.25	LC2-1 -X Dir.	Combination	-16.677	-0.381	-2.948	4.054E-14	6.6326	0.8574
646	1.5	LC2-1 -X Dir.	Combination	-16.653	-0.381	-2.948	0	4.4218	0.5716
646	1.5	LC2-1 -X Dir.	Combination	-16.653	-0.381	-2.948	4.054E-14	4.4218	0.5716
601	1.5	LC2-1 -X Dir.	Combination	-4.286	0.786	-2.948	0	4.4217	-1.1793
601	1.5	LC2-1 -X Dir.	Combination	-4.286	0.786	-2.948	-5.586E-15	4.4217	-1.1793
601	0	LC2-1 -X Dir.	Combination	-4.237	0.786	-2.948	0	1.164E-14	2.831E-16
646	0	LC2-1 -X Dir.	Combination	-16.604	-0.381	-2.948	0	-7.994E-16	1.454E-15
604	4.5	LC2-1 -X Dir.	Combination	-6.971	0.55	-2.946	-4.187E-14	13.2571	-2.4733
799	4.5	LC2-1 -X Dir.	Combination	-13.165	-0.034	-2.946	0	13.2558	0.154
805	4.5	LC2-1 -X Dir.	Combination	-15.555	-0.265	-2.946	0	13.2548	1.1945
604	3	LC2-1 -X Dir.	Combination	-6.922	0.55	-2.946	4.187E-14	8.838	-1.6489
604	3	LC2-1 -X Dir.	Combination	-6.922	0.55	-2.946	-4.187E-14	8.838	-1.6489
799	3	LC2-1 -X Dir.	Combination	-13.116	-0.034	-2.946	0	8.8372	0.1027
799	3	LC2-1 -X Dir.	Combination	-13.116	-0.034	-2.946	0	8.8372	0.1027
805	3	LC2-1 -X Dir.	Combination	-15.507	-0.265	-2.946	0	8.8365	0.7963
805	3	LC2-1 -X Dir.	Combination	-15.507	-0.265	-2.946	0	8.8365	0.7963
604	2.25	LC2-1 -X Dir.	Combination	-6.898	0.55	-2.946	4.187E-14	6.6285	-1.2366
799	2.25	LC2-1 -X Dir.	Combination	-13.092	-0.034	-2.946	0	6.6279	0.077
805	2.25	LC2-1 -X Dir.	Combination	-15.482	-0.265	-2.946	0	6.6274	0.5973
604	1.5	LC2-1 -X Dir.	Combination	-6.874	0.55	-2.946	0	4.419	-0.8244
604	1.5	LC2-1 -X Dir.	Combination	-6.874	0.55	-2.946	4.187E-14	4.419	-0.8244
799	1.5	LC2-1 -X Dir.	Combination	-13.068	-0.034	-2.946	0	4.4186	0.0513
799	1.5	LC2-1 -X Dir.	Combination	-13.068	-0.034	-2.946	0	4.4186	0.0513
805	1.5	LC2-1 -X Dir.	Combination	-15.458	-0.265	-2.946	0	4.4183	0.3982
805	1.5	LC2-1 -X Dir.	Combination	-15.458	-0.265	-2.946	0	4.4183	0.3982
604	0	LC2-1 -X Dir.	Combination	-6.825	0.55	-2.946	0	1.144E-14	-9.992E-17
799	0	LC2-1 -X Dir.	Combination	-13.019	-0.034	-2.946	0	7.994E-16	1.443E-16
805	0	LC2-1 -X Dir.	Combination	-15.41	-0.265	-2.946	0	-7.994E-16	1.155E-15

SAP Output-Pile Forces-Linear Analysis-Pinned Column Connection-20130214

TABLE: Element Forces - Frames									
Frame	Station	OutputCase	CaseType	P	V2	V3	T	M2	M3
Text	ft	Text	Text	Kip	Kip	Kip	Kip-ft	Kip-ft	Kip-ft
850	0	LC4-1 +X Dir.	Combination	7.244	1.449	1.49	0	-3.997E-16	1.124E-14
850	1.5	LC4-1 +X Dir.	Combination	7.208	1.449	1.49	0	-2.2357	-2.1732
850	1.5	LC4-1 +X Dir.	Combination	7.208	1.449	1.49	0	-2.2357	-2.1732
850	2.25	LC4-1 +X Dir.	Combination	7.19	1.449	1.49	0	-3.3535	-3.2598
850	3	LC4-1 +X Dir.	Combination	7.171	1.449	1.49	0	-4.4714	-4.3464
850	3	LC4-1 +X Dir.	Combination	7.171	1.449	1.49	0	-4.4714	-4.3464
850	4.5	LC4-1 +X Dir.	Combination	7.135	1.449	1.49	0	-6.707	-6.5196
849	0	LC4-1 +X Dir.	Combination	6.107	1.461	1.282	0	1.137E-14	-1.561E-18
849	1.5	LC4-1 +X Dir.	Combination	6.07	1.461	1.282	0	-1.9223	-2.1912
849	1.5	LC4-1 +X Dir.	Combination	6.07	1.461	1.282	0	-1.9223	-2.1912
849	2.25	LC4-1 +X Dir.	Combination	6.052	1.461	1.282	0	-2.8834	-3.2868
849	3	LC4-1 +X Dir.	Combination	6.034	1.461	1.282	0	-3.8446	-4.3823
849	3	LC4-1 +X Dir.	Combination	6.034	1.461	1.282	0	-3.8446	-4.3823
849	4.5	LC4-1 +X Dir.	Combination	5.998	1.461	1.282	0	-5.7669	-6.5735
922	0	LC4-1 +X Dir.	Combination	5.5	1.396	1.387	0	5.085E-15	1.134E-14
922	1.5	LC4-1 +X Dir.	Combination	5.464	1.396	1.387	0	-2.08	-2.0946
922	1.5	LC4-1 +X Dir.	Combination	5.464	1.396	1.387	-9.853E-15	-2.08	-2.0946
922	2.25	LC4-1 +X Dir.	Combination	5.446	1.396	1.387	-9.853E-15	-3.12	-3.1419
922	3	LC4-1 +X Dir.	Combination	5.428	1.396	1.387	-9.853E-15	-4.16	-4.1892
922	3	LC4-1 +X Dir.	Combination	5.428	1.396	1.387	9.853E-15	-4.16	-4.1892
922	4.5	LC4-1 +X Dir.	Combination	5.391	1.396	1.387	9.853E-15	-6.2399	-6.2837
365	0	LC4-1 +X Dir.	Combination	4.858	1.332	1.491	0	1.137E-14	1.688E-14
365	1.5	LC4-1 +X Dir.	Combination	4.821	1.332	1.491	0	-2.2364	-1.9981
365	1.5	LC4-1 +X Dir.	Combination	4.821	1.332	1.491	5.915E-16	-2.2364	-1.9981
365	2.25	LC4-1 +X Dir.	Combination	4.803	1.332	1.491	5.915E-16	-3.3546	-2.9971
365	3	LC4-1 +X Dir.	Combination	4.785	1.332	1.491	5.915E-16	-4.4727	-3.9961
365	3	LC4-1 +X Dir.	Combination	4.785	1.332	1.491	-5.915E-16	-4.4727	-3.9961
365	4.5	LC4-1 +X Dir.	Combination	4.749	1.332	1.491	-5.915E-16	-6.7091	-5.9942
848	0	LC4-1 +X Dir.	Combination	4.671	1.468	1.07	0	-5.285E-15	5.671E-15
848	1.5	LC4-1 +X Dir.	Combination	4.635	1.468	1.07	0	-1.6044	-2.2015
848	1.5	LC4-1 +X Dir.	Combination	4.635	1.468	1.07	-7.6E-15	-1.6044	-2.2015
848	2.25	LC4-1 +X Dir.	Combination	4.616	1.468	1.07	-7.6E-15	-2.4065	-3.3023
848	3	LC4-1 +X Dir.	Combination	4.598	1.468	1.07	-7.6E-15	-3.2087	-4.4031
848	3	LC4-1 +X Dir.	Combination	4.598	1.468	1.07	7.6E-15	-3.2087	-4.4031
848	4.5	LC4-1 +X Dir.	Combination	4.562	1.468	1.07	7.6E-15	-4.8131	-6.6046
938	0	LC4-1 +X Dir.	Combination	4.219	1.407	1.176	0	-5.884E-15	-5.709E-15
938	1.5	LC4-1 +X Dir.	Combination	4.183	1.407	1.176	0	-1.7641	-2.11
938	1.5	LC4-1 +X Dir.	Combination	4.183	1.407	1.176	-8.356E-15	-1.7641	-2.11
938	2.25	LC4-1 +X Dir.	Combination	4.164	1.407	1.176	-8.356E-15	-2.6461	-3.165
938	3	LC4-1 +X Dir.	Combination	4.146	1.407	1.176	-8.356E-15	-3.5281	-4.22
938	3	LC4-1 +X Dir.	Combination	4.146	1.407	1.176	8.356E-15	-3.5281	-4.22
905	0	LC4-1 +X Dir.	Combination	4.13	1.27	1.596	0	5.995E-16	5.609E-15
850	0	SC4-1 +X Dir.	Combination	4.123	0.906	0.919	0	-2.665E-16	7.02E-15
938	4.5	LC4-1 +X Dir.	Combination	4.11	1.407	1.176	8.356E-15	-5.2922	-6.3301
850	1.5	SC4-1 +X Dir.	Combination	4.099	0.906	0.919	0	-1.379	-1.3594
850	1.5	SC4-1 +X Dir.	Combination	4.099	0.906	0.919	0	-1.379	-1.3594
905	1.5	LC4-1 +X Dir.	Combination	4.093	1.27	1.596	0	-2.3945	-1.9046
905	1.5	LC4-1 +X Dir.	Combination	4.093	1.27	1.596	1.021E-14	-2.3945	-1.9046
850	2.25	SC4-1 +X Dir.	Combination	4.087	0.906	0.919	0	-2.0685	-2.0392
905	2.25	LC4-1 +X Dir.	Combination	4.075	1.27	1.596	1.021E-14	-3.5918	-2.8569
850	3	SC4-1 +X Dir.	Combination	4.074	0.906	0.919	0	-2.758	-2.7189
850	3	SC4-1 +X Dir.	Combination	4.074	0.906	0.919	0	-2.758	-2.7189
905	3	LC4-1 +X Dir.	Combination	4.057	1.27	1.596	1.021E-14	-4.789	-3.8091
905	3	LC4-1 +X Dir.	Combination	4.057	1.27	1.596	-1.021E-14	-4.789	-3.8091
850	4.5	SC4-1 +X Dir.	Combination	4.05	0.906	0.919	0	-4.137	-4.0783

SAP Output-Pile Forces-Linear Analysis-Pinned Column Connection-20130214

TABLE: Element Forces - Frames									
Frame	Station	OutputCase	CaseType	P	V2	V3	T	M2	M3
529	4.5	LC2-2 -Y Dir.	Combination	-46.268	-0.633	-0.424	0	1.9065	2.8482
529	3	LC2-2 -Y Dir.	Combination	-46.22	-0.633	-0.424	0	1.271	1.8988
529	3	LC2-2 -Y Dir.	Combination	-46.22	-0.633	-0.424	0	1.271	1.8988
529	2.25	LC2-2 -Y Dir.	Combination	-46.195	-0.633	-0.424	0	0.9532	1.4241
529	1.5	LC2-2 -Y Dir.	Combination	-46.171	-0.633	-0.424	0	0.6355	0.9494
529	1.5	LC2-2 -Y Dir.	Combination	-46.171	-0.633	-0.424	0	0.6355	0.9494
529	0	LC2-2 -Y Dir.	Combination	-46.123	-0.633	-0.424	0	-7.994E-16	3.164E-16
529	4.5	LC2-1 +X Dir.	Combination	-46.034	-0.774	-0.682	0	3.0685	3.482
529	3	LC2-1 +X Dir.	Combination	-45.986	-0.774	-0.682	0	2.0457	2.3213
529	3	LC2-1 +X Dir.	Combination	-45.986	-0.774	-0.682	0	2.0457	2.3213
529	2.25	LC2-1 +X Dir.	Combination	-45.961	-0.774	-0.682	0	1.5343	1.741
529	1.5	LC2-1 +X Dir.	Combination	-45.937	-0.774	-0.682	0	1.0228	1.1607
529	1.5	LC2-1 +X Dir.	Combination	-45.937	-0.774	-0.682	0	1.0228	1.1607
530	4.5	LC2-2 -Y Dir.	Combination	-45.91	-0.628	-0.444	0	1.9991	2.8243
529	0	LC2-1 +X Dir.	Combination	-45.889	-0.774	-0.682	0	-7.994E-16	6.001E-15
530	3	LC2-2 -Y Dir.	Combination	-45.862	-0.628	-0.444	0	1.3327	1.8829
530	3	LC2-2 -Y Dir.	Combination	-45.862	-0.628	-0.444	0	1.3327	1.8829
530	2.25	LC2-2 -Y Dir.	Combination	-45.838	-0.628	-0.444	0	0.9996	1.4121
530	1.5	LC2-2 -Y Dir.	Combination	-45.813	-0.628	-0.444	0	0.6664	0.9414
530	1.5	LC2-2 -Y Dir.	Combination	-45.813	-0.628	-0.444	0	0.6664	0.9414
530	0	LC2-2 -Y Dir.	Combination	-45.765	-0.628	-0.444	0	8.882E-16	1.332E-16
723	4.5	LC2-1 +X Dir.	Combination	-45.436	-0.882	-0.543	-2.411E-16	2.4434	3.9682
723	3	LC2-1 +X Dir.	Combination	-45.388	-0.882	-0.543	2.411E-16	1.6289	2.6454
723	3	LC2-1 +X Dir.	Combination	-45.388	-0.882	-0.543	-2.411E-16	1.6289	2.6454
723	2.25	LC2-1 +X Dir.	Combination	-45.364	-0.882	-0.543	2.411E-16	1.2217	1.9841
723	1.5	LC2-1 +X Dir.	Combination	-45.339	-0.882	-0.543	0	0.8145	1.3227
723	1.5	LC2-1 +X Dir.	Combination	-45.339	-0.882	-0.543	2.411E-16	0.8145	1.3227
723	0	LC2-1 +X Dir.	Combination	-45.291	-0.882	-0.543	0	-2.487E-15	-2.959E-15
726	4.5	LC2-2 -Y Dir.	Combination	-45.164	-0.63	-0.43	0	1.9328	2.8356
726	3	LC2-2 -Y Dir.	Combination	-45.115	-0.63	-0.43	0	1.2886	1.8904
726	3	LC2-2 -Y Dir.	Combination	-45.115	-0.63	-0.43	0	1.2886	1.8904
726	2.25	LC2-2 -Y Dir.	Combination	-45.091	-0.63	-0.43	0	0.9664	1.4178
726	1.5	LC2-2 -Y Dir.	Combination	-45.067	-0.63	-0.43	0	0.6443	0.9452
726	1.5	LC2-2 -Y Dir.	Combination	-45.067	-0.63	-0.43	0	0.6443	0.9452
726	0	LC2-2 -Y Dir.	Combination	-45.018	-0.63	-0.43	0	-5.329E-16	2.498E-16
531	4.5	LC2-2 -Y Dir.	Combination	-44.628	-0.627	-0.459	0	2.0672	2.8204
531	3	LC2-2 -Y Dir.	Combination	-44.579	-0.627	-0.459	0	1.3782	1.8803
531	3	LC2-2 -Y Dir.	Combination	-44.579	-0.627	-0.459	0	1.3782	1.8803
531	2.25	LC2-2 -Y Dir.	Combination	-44.555	-0.627	-0.459	0	1.0336	1.4102
776	4.5	LC2-1 +X Dir.	Combination	-44.54	-0.772	-0.573	-2.545E-16	2.5793	3.476
531	1.5	LC2-2 -Y Dir.	Combination	-44.531	-0.627	-0.459	0	0.6891	0.9401
531	1.5	LC2-2 -Y Dir.	Combination	-44.531	-0.627	-0.459	0	0.6891	0.9401
776	3	LC2-1 +X Dir.	Combination	-44.491	-0.772	-0.573	2.545E-16	1.7195	2.3174
776	3	LC2-1 +X Dir.	Combination	-44.491	-0.772	-0.573	-2.545E-16	1.7195	2.3174
531	0	LC2-2 -Y Dir.	Combination	-44.482	-0.627	-0.459	0	-4.885E-16	-1.998E-16
776	2.25	LC2-1 +X Dir.	Combination	-44.467	-0.772	-0.573	2.545E-16	1.2896	1.738
734	4.5	LC2-2 -Y Dir.	Combination	-44.449	-0.627	-0.454	-1.007E-16	2.0415	2.8203
776	1.5	LC2-1 +X Dir.	Combination	-44.443	-0.772	-0.573	0	0.8598	1.1587
776	1.5	LC2-1 +X Dir.	Combination	-44.443	-0.772	-0.573	2.545E-16	0.8598	1.1587
776	4.5	LC2-2 -Y Dir.	Combination	-44.416	-0.632	-0.415	-1.845E-16	1.8693	2.8426
734	3	LC2-2 -Y Dir.	Combination	-44.4	-0.627	-0.454	1.007E-16	1.361	1.8802
734	3	LC2-2 -Y Dir.	Combination	-44.4	-0.627	-0.454	-1.007E-16	1.361	1.8802
776	0	LC2-1 +X Dir.	Combination	-44.394	-0.772	-0.573	0	-1.177E-15	-3.664E-16
734	2.25	LC2-2 -Y Dir.	Combination	-44.376	-0.627	-0.454	1.007E-16	1.0208	1.4101
776	3	LC2-2 -Y Dir.	Combination	-44.368	-0.632	-0.415	1.845E-16	1.2462	1.8951
776	3	LC2-2 -Y Dir.	Combination	-44.368	-0.632	-0.415	-1.845E-16	1.2462	1.8951

SAP Output-Pile Forces-Linear Analysis-Pinned Column Connection-20130214

TABLE: Element Forces - Frames									
Frame	Station	OutputCase	CaseType	P	V2	V3	T	M2	M3
850	0	SC4-1 +X Dir.	Combination	4.123	0.906	0.919	0	-2.665E-16	7.02E-15
850	1.5	SC4-1 +X Dir.	Combination	4.099	0.906	0.919	0	-1.379	-1.3594
850	1.5	SC4-1 +X Dir.	Combination	4.099	0.906	0.919	0	-1.379	-1.3594
850	2.25	SC4-1 +X Dir.	Combination	4.087	0.906	0.919	0	-2.0685	-2.0392
850	3	SC4-1 +X Dir.	Combination	4.074	0.906	0.919	0	-2.758	-2.7189
850	3	SC4-1 +X Dir.	Combination	4.074	0.906	0.919	0	-2.758	-2.7189
850	4.5	SC4-1 +X Dir.	Combination	4.05	0.906	0.919	0	-4.137	-4.0783
849	0	SC4-1 +X Dir.	Combination	3.378	0.914	0.789	0	7.105E-15	-1.041E-18
849	1.5	SC4-1 +X Dir.	Combination	3.354	0.914	0.789	0	-1.1828	-1.3703
849	1.5	SC4-1 +X Dir.	Combination	3.354	0.914	0.789	0	-1.1828	-1.3703
849	2.25	SC4-1 +X Dir.	Combination	3.342	0.914	0.789	0	-1.7743	-2.0554
849	3	SC4-1 +X Dir.	Combination	3.33	0.914	0.789	0	-2.3657	-2.7406
849	3	SC4-1 +X Dir.	Combination	3.33	0.914	0.789	0	-2.3657	-2.7406
849	4.5	SC4-1 +X Dir.	Combination	3.305	0.914	0.789	0	-3.5485	-4.1109
922	0	SC4-1 +X Dir.	Combination	3.002	0.873	0.854	0	3.153E-15	7.089E-15
922	1.5	SC4-1 +X Dir.	Combination	2.978	0.873	0.854	0	-1.2815	-1.3101
922	1.5	SC4-1 +X Dir.	Combination	2.978	0.873	0.854	-6.071E-15	-1.2815	-1.3101
922	2.25	SC4-1 +X Dir.	Combination	2.966	0.873	0.854	-6.071E-15	-1.9223	-1.9651
922	3	SC4-1 +X Dir.	Combination	2.953	0.873	0.854	-6.071E-15	-2.5631	-2.6201
922	3	SC4-1 +X Dir.	Combination	2.953	0.873	0.854	6.071E-15	-2.5631	-2.6201
922	4.5	SC4-1 +X Dir.	Combination	2.929	0.873	0.854	6.071E-15	-3.8446	-3.9302
365	0	SC4-1 +X Dir.	Combination	2.605	0.833	0.92	0	7.105E-15	1.055E-14
365	1.5	SC4-1 +X Dir.	Combination	2.581	0.833	0.92	0	-1.3795	-1.2499
365	1.5	SC4-1 +X Dir.	Combination	2.581	0.833	0.92	3.7E-16	-1.3795	-1.2499
365	2.25	SC4-1 +X Dir.	Combination	2.569	0.833	0.92	3.7E-16	-2.0692	-1.8748
365	3	SC4-1 +X Dir.	Combination	2.557	0.833	0.92	3.7E-16	-2.7589	-2.4998
365	3	SC4-1 +X Dir.	Combination	2.557	0.833	0.92	-3.7E-16	-2.7589	-2.4998
365	4.5	SC4-1 +X Dir.	Combination	2.533	0.833	0.92	-3.7E-16	-4.1384	-3.7496
848	0	SC4-1 +X Dir.	Combination	2.449	0.918	0.656	0	-3.286E-15	3.544E-15
848	1.5	SC4-1 +X Dir.	Combination	2.424	0.918	0.656	0	-0.984	-1.3768
848	1.5	SC4-1 +X Dir.	Combination	2.424	0.918	0.656	-4.661E-15	-0.984	-1.3768
848	2.25	SC4-1 +X Dir.	Combination	2.412	0.918	0.656	-4.661E-15	-1.476	-2.0652
848	3	SC4-1 +X Dir.	Combination	2.4	0.918	0.656	-4.661E-15	-1.9679	-2.7536
848	3	SC4-1 +X Dir.	Combination	2.4	0.918	0.656	4.661E-15	-1.9679	-2.7536
848	4.5	SC4-1 +X Dir.	Combination	2.376	0.918	0.656	4.661E-15	-2.9519	-4.1303
938	0	SC4-1 +X Dir.	Combination	2.167	0.88	0.723	0	-3.686E-15	-3.569E-15
905	0	SC4-1 +X Dir.	Combination	2.157	0.794	0.986	0	3.997E-16	3.503E-15
938	1.5	SC4-1 +X Dir.	Combination	2.143	0.88	0.723	0	-1.0839	-1.3195
938	1.5	SC4-1 +X Dir.	Combination	2.143	0.88	0.723	-5.134E-15	-1.0839	-1.3195
905	1.5	SC4-1 +X Dir.	Combination	2.132	0.794	0.986	0	-1.4785	-1.1915
905	1.5	SC4-1 +X Dir.	Combination	2.132	0.794	0.986	6.298E-15	-1.4785	-1.1915
938	2.25	SC4-1 +X Dir.	Combination	2.131	0.88	0.723	-5.134E-15	-1.6258	-1.9792
905	2.25	SC4-1 +X Dir.	Combination	2.12	0.794	0.986	6.298E-15	-2.2177	-1.7873
938	3	SC4-1 +X Dir.	Combination	2.119	0.88	0.723	-5.134E-15	-2.1678	-2.639
938	3	SC4-1 +X Dir.	Combination	2.119	0.88	0.723	5.134E-15	-2.1678	-2.639
905	3	SC4-1 +X Dir.	Combination	2.108	0.794	0.986	6.298E-15	-2.957	-2.383
905	3	SC4-1 +X Dir.	Combination	2.108	0.794	0.986	-6.298E-15	-2.957	-2.383
938	4.5	SC4-1 +X Dir.	Combination	2.095	0.88	0.723	5.134E-15	-3.2517	-3.9585
905	4.5	SC4-1 +X Dir.	Combination	2.084	0.794	0.986	-6.298E-15	-4.4355	-3.5745
364	0	SC4-1 +X Dir.	Combination	1.869	0.84	0.789	0	3.419E-15	1.421E-14
364	1.5	SC4-1 +X Dir.	Combination	1.844	0.84	0.789	0	-1.1832	-1.2602
364	1.5	SC4-1 +X Dir.	Combination	1.844	0.84	0.789	5.605E-15	-1.1832	-1.2602
364	2.25	SC4-1 +X Dir.	Combination	1.832	0.84	0.789	5.605E-15	-1.7748	-1.8903
364	3	SC4-1 +X Dir.	Combination	1.82	0.84	0.789	5.605E-15	-2.3664	-2.5204
364	3	SC4-1 +X Dir.	Combination	1.82	0.84	0.789	-5.605E-15	-2.3664	-2.5204
364	4.5	SC4-1 +X Dir.	Combination	1.796	0.84	0.789	-5.605E-15	-3.5497	-3.7806

SAP Output-Pile Forces-Linear Analysis-Pinned Column Connection-20130214

TABLE: Element Forces - Frames									
Frame	Station	OutputCase	CaseType	P	V2	V3	T	M2	M3
529	4.5	SC2-2 -Y Dir.	Combination	-36.459	-0.397	-0.338	0	1.5232	1.7845
529	3	SC2-2 -Y Dir.	Combination	-36.419	-0.397	-0.338	0	1.0155	1.1897
529	3	SC2-2 -Y Dir.	Combination	-36.419	-0.397	-0.338	0	1.0155	1.1897
529	2.25	SC2-2 -Y Dir.	Combination	-36.399	-0.397	-0.338	0	0.7616	0.8923
529	1.5	SC2-2 -Y Dir.	Combination	-36.378	-0.397	-0.338	0	0.5077	0.5948
529	1.5	SC2-2 -Y Dir.	Combination	-36.378	-0.397	-0.338	0	0.5077	0.5948
529	0	SC2-2 -Y Dir.	Combination	-36.338	-0.397	-0.338	0	-6.661E-16	2.637E-16
529	4.5	SC2-1 +X Dir.	Combination	-36.313	-0.485	-0.5	0	2.2495	2.1806
529	3	SC2-1 +X Dir.	Combination	-36.273	-0.485	-0.5	0	1.4997	1.4538
529	3	SC2-1 +X Dir.	Combination	-36.273	-0.485	-0.5	0	1.4997	1.4538
529	2.25	SC2-1 +X Dir.	Combination	-36.252	-0.485	-0.5	0	1.1247	1.0903
529	1.5	SC2-1 +X Dir.	Combination	-36.232	-0.485	-0.5	0	0.7498	0.7269
529	1.5	SC2-1 +X Dir.	Combination	-36.232	-0.485	-0.5	0	0.7498	0.7269
530	4.5	SC2-2 -Y Dir.	Combination	-36.225	-0.394	-0.355	0	1.5969	1.7733
529	0	SC2-1 +X Dir.	Combination	-36.192	-0.485	-0.5	0	-6.661E-16	3.816E-15
530	3	SC2-2 -Y Dir.	Combination	-36.185	-0.394	-0.355	0	1.0646	1.1822
530	3	SC2-2 -Y Dir.	Combination	-36.185	-0.394	-0.355	0	1.0646	1.1822
530	2.25	SC2-2 -Y Dir.	Combination	-36.165	-0.394	-0.355	0	0.7985	0.8866
530	1.5	SC2-2 -Y Dir.	Combination	-36.144	-0.394	-0.355	0	0.5323	0.5911
530	1.5	SC2-2 -Y Dir.	Combination	-36.144	-0.394	-0.355	0	0.5323	0.5911
530	0	SC2-2 -Y Dir.	Combination	-36.104	-0.394	-0.355	0	6.661E-16	1.11E-16
723	4.5	SC2-1 +X Dir.	Combination	-35.688	-0.551	-0.409	-1.818E-16	1.8423	2.4796
726	4.5	SC2-2 -Y Dir.	Combination	-35.659	-0.395	-0.344	0	1.5459	1.7783
723	3	SC2-1 +X Dir.	Combination	-35.647	-0.551	-0.409	1.818E-16	1.2282	1.6531
723	3	SC2-1 +X Dir.	Combination	-35.647	-0.551	-0.409	-1.818E-16	1.2282	1.6531
723	2.25	SC2-1 +X Dir.	Combination	-35.627	-0.551	-0.409	1.818E-16	0.9212	1.2398
726	3	SC2-2 -Y Dir.	Combination	-35.619	-0.395	-0.344	0	1.0306	1.1856
726	3	SC2-2 -Y Dir.	Combination	-35.619	-0.395	-0.344	0	1.0306	1.1856
723	1.5	SC2-1 +X Dir.	Combination	-35.607	-0.551	-0.409	0	0.6141	0.8265
723	1.5	SC2-1 +X Dir.	Combination	-35.607	-0.551	-0.409	1.818E-16	0.6141	0.8265
726	2.25	SC2-2 -Y Dir.	Combination	-35.598	-0.395	-0.344	0	0.7729	0.8892
726	1.5	SC2-2 -Y Dir.	Combination	-35.578	-0.395	-0.344	0	0.5153	0.5928
726	1.5	SC2-2 -Y Dir.	Combination	-35.578	-0.395	-0.344	0	0.5153	0.5928
723	0	SC2-1 +X Dir.	Combination	-35.566	-0.551	-0.409	0	-1.776E-15	-1.874E-15
726	0	SC2-2 -Y Dir.	Combination	-35.538	-0.395	-0.344	0	-4.441E-16	2.082E-16
531	4.5	SC2-2 -Y Dir.	Combination	-35.254	-0.395	-0.367	0	1.653	1.7772
531	3	SC2-2 -Y Dir.	Combination	-35.213	-0.395	-0.367	0	1.102	1.1848
531	3	SC2-2 -Y Dir.	Combination	-35.213	-0.395	-0.367	0	1.102	1.1848
531	2.25	SC2-2 -Y Dir.	Combination	-35.193	-0.395	-0.367	0	0.8265	0.8886
531	1.5	SC2-2 -Y Dir.	Combination	-35.173	-0.395	-0.367	0	0.551	0.5924
531	1.5	SC2-2 -Y Dir.	Combination	-35.173	-0.395	-0.367	0	0.551	0.5924
776	4.5	SC2-1 +X Dir.	Combination	-35.168	-0.484	-0.431	-1.915E-16	1.941	2.1758
734	4.5	SC2-2 -Y Dir.	Combination	-35.14	-0.394	-0.363	-8.058E-17	1.633	1.7737
531	0	SC2-2 -Y Dir.	Combination	-35.132	-0.395	-0.367	0	-5.551E-16	-1.665E-16
776	3	SC2-1 +X Dir.	Combination	-35.128	-0.484	-0.431	1.915E-16	1.294	1.4506
776	3	SC2-1 +X Dir.	Combination	-35.128	-0.484	-0.431	-1.915E-16	1.294	1.4506
776	2.25	SC2-1 +X Dir.	Combination	-35.107	-0.484	-0.431	1.915E-16	0.9705	1.0879
734	3	SC2-2 -Y Dir.	Combination	-35.099	-0.394	-0.363	8.058E-17	1.0887	1.1824
734	3	SC2-2 -Y Dir.	Combination	-35.099	-0.394	-0.363	-8.058E-17	1.0887	1.1824
776	4.5	SC2-2 -Y Dir.	Combination	-35.091	-0.396	-0.333	-1.478E-16	1.4972	1.78
776	1.5	SC2-1 +X Dir.	Combination	-35.087	-0.484	-0.431	0	0.647	0.7253
776	1.5	SC2-1 +X Dir.	Combination	-35.087	-0.484	-0.431	1.915E-16	0.647	0.7253
734	2.25	SC2-2 -Y Dir.	Combination	-35.079	-0.394	-0.363	8.058E-17	0.8165	0.8868
734	1.5	SC2-2 -Y Dir.	Combination	-35.059	-0.394	-0.363	0	0.5443	0.5912
734	1.5	SC2-2 -Y Dir.	Combination	-35.059	-0.394	-0.363	8.058E-17	0.5443	0.5912
776	3	SC2-2 -Y Dir.	Combination	-35.05	-0.396	-0.333	1.478E-16	0.9982	1.1866

SAP Output-Pile Forces-Linear Analysis-Pinned Column Connection-20130214

8-4-5-2
Pile Forces - 2” Diameter Degradation

TABLE: Element Forces - Frames									
Frame	Station	OutputCase	CaseType	P	V2	V3	T	M2	M3
Text	ft	Text	Text	Kip	Kip	Kip	Kip-ft	Kip-ft	Kip-ft
601	4.5	LC2-1 -X Dir.	Combination	-4.043	0.762	-2.791	5.416E-15	12.5599	-3.4298
604	4.5	LC2-1 -X Dir.	Combination	-6.644	0.534	-2.79	-3.965E-14	12.555	-2.4009
606	4.5	LC2-1 -X Dir.	Combination	-9.166	0.307	-2.789	-2.181E-15	12.551	-1.3811
793	4.5	LC2-1 -X Dir.	Combination	-10.463	0.193	-2.789	0	12.5493	-0.8688
799	4.5	LC2-1 -X Dir.	Combination	-12.989	-0.034	-2.788	0	12.5449	0.1527
811	4.5	LC2-1 -X Dir.	Combination	-18.156	-0.485	-2.787	1.722E-15	12.5436	2.1806
610	4.5	LC2-1 -X Dir.	Combination	-14.245	-0.147	-2.787	5.216E-16	12.5397	0.6606
646	4.5	LC2-1 -X Dir.	Combination	-16.864	-0.372	-2.786	-3.827E-14	12.5377	1.6748
805	4.5	LC2-1 -X Dir.	Combination	-15.547	-0.26	-2.786	0	12.5365	1.1678
731	4.5	LC2-1 -X Dir.	Combination	-5.921	0.648	-2.739	0	12.3245	-2.9147
739	4.5	LC2-1 -X Dir.	Combination	-8.465	0.42	-2.738	2.984E-15	12.3225	-1.8901
601	4.5	LC4-1 -X Dir.	Combination	-0.392	0.765	-2.719	5.438E-15	12.2355	-3.4441
604	4.5	LC4-1 -X Dir.	Combination	-2.944	0.535	-2.717	-3.861E-14	12.2276	-2.4084
606	4.5	LC4-1 -X Dir.	Combination	-5.462	0.307	-2.715	-2.184E-15	12.2196	-1.3829
793	4.5	LC4-1 -X Dir.	Combination	-6.766	0.193	-2.715	0	12.2167	-0.8684
799	4.5	LC4-1 -X Dir.	Combination	-9.333	-0.035	-2.713	0	12.21	0.1579
610	4.5	LC4-1 -X Dir.	Combination	-10.624	-0.149	-2.712	5.276E-16	12.2035	0.6683
811	4.5	LC4-1 -X Dir.	Combination	-14.679	-0.487	-2.711	1.732E-15	12.2004	2.1934
805	4.5	LC4-1 -X Dir.	Combination	-11.962	-0.262	-2.711	0	12.1984	1.1776
646	4.5	LC4-1 -X Dir.	Combination	-13.328	-0.375	-2.71	-3.719E-14	12.1971	1.6864
886	4.5	LC2-1 -X Dir.	Combination	-20.744	-0.654	-2.69	0	12.1066	2.9448
777	4.5	LC2-1 -X Dir.	Combination	-5.225	0.762	-2.688	5.417E-15	12.0982	-3.4308
885	4.5	LC2-1 -X Dir.	Combination	-19.567	-0.542	-2.688	-4.012E-14	12.0965	2.4369
783	4.5	LC2-1 -X Dir.	Combination	-7.757	0.533	-2.687	0	12.0928	-2.4006
789	4.5	LC2-1 -X Dir.	Combination	-10.273	0.307	-2.687	-2.178E-15	12.0918	-1.3796
608	4.5	LC2-1 -X Dir.	Combination	-12.753	0.079	-2.687	3.818E-14	12.0904	-0.356
880	4.5	LC2-1 -X Dir.	Combination	-18.361	-0.429	-2.686	-1.525E-15	12.0886	1.9311
873	4.5	LC2-1 -X Dir.	Combination	-14.575	-0.091	-2.686	0	12.0868	0.4092
879	4.5	LC2-1 -X Dir.	Combination	-17.097	-0.317	-2.685	0	12.084	1.4244
874	4.5	LC2-1 -X Dir.	Combination	-15.824	-0.204	-2.685	7.241E-16	12.0839	0.9172
720	4.5	LC2-1 -X Dir.	Combination	-4.112	0.878	-2.679	0	12.057	-3.9515
731	4.5	LC4-1 -X Dir.	Combination	-2.155	0.65	-2.666	0	11.9973	-2.9255
739	4.5	LC4-1 -X Dir.	Combination	-4.67	0.421	-2.665	2.992E-15	11.9915	-1.8948
730	4.5	LC2-1 -X Dir.	Combination	-7.049	0.648	-2.636	-4.604E-15	11.8641	-2.9157
738	4.5	LC2-1 -X Dir.	Combination	-9.561	0.42	-2.636	0	11.8622	-1.8903
777	4.5	LC4-1 -X Dir.	Combination	-1.402	0.766	-2.616	5.44E-15	11.7716	-3.4455
783	4.5	LC4-1 -X Dir.	Combination	-3.883	0.535	-2.614	0	11.7628	-2.4081
789	4.5	LC4-1 -X Dir.	Combination	-6.39	0.307	-2.613	-2.182E-15	11.758	-1.3819
886	4.5	LC4-1 -X Dir.	Combination	-17.249	-0.657	-2.613	0	11.7564	2.9585
608	4.5	LC4-1 -X Dir.	Combination	-8.901	0.079	-2.612	3.712E-14	11.7542	-0.3533
885	4.5	LC4-1 -X Dir.	Combination	-15.979	-0.544	-2.611	-3.904E-14	11.7491	2.4498
873	4.5	LC4-1 -X Dir.	Combination	-10.767	-0.092	-2.611	0	11.7488	0.4154
874	4.5	LC4-1 -X Dir.	Combination	-12.052	-0.206	-2.61	7.309E-16	11.7444	0.9257
880	4.5	LC4-1 -X Dir.	Combination	-14.692	-0.432	-2.61	-1.534E-15	11.7443	1.9431
879	4.5	LC4-1 -X Dir.	Combination	-13.369	-0.319	-2.609	0	11.7423	1.435
720	4.5	LC4-1 -X Dir.	Combination	-0.314	0.882	-2.607	0	11.7325	-3.9706
816	4.5	LC2-1 -X Dir.	Combination	-21.901	-0.71	-2.592	0	11.6619	3.1961
599	4.5	LC2-1 -X Dir.	Combination	-20.873	-0.599	-2.59	0	11.6543	2.6948
812	4.5	LC2-1 -X Dir.	Combination	-19.765	-0.486	-2.588	0	11.6456	2.1882
800	4.5	LC2-1 -X Dir.	Combination	-14.922	-0.035	-2.586	0	11.638	0.1556
571	4.5	LC2-1 -X Dir.	Combination	-18.567	-0.374	-2.586	1.327E-15	11.638	1.6814
794	4.5	LC2-1 -X Dir.	Combination	-12.564	0.193	-2.586	1.37E-15	11.6366	-0.8676
566	4.5	LC2-1 -X Dir.	Combination	-6.389	0.762	-2.586	5.418E-15	11.6365	-3.4312
570	4.5	LC2-1 -X Dir.	Combination	-16.105	-0.148	-2.586	-5.252E-16	11.6357	0.6652
806	4.5	LC2-1 -X Dir.	Combination	-17.331	-0.261	-2.586	0	11.6348	1.1738
568	4.5	LC2-1 -X Dir.	Combination	-11.342	0.307	-2.585	2.179E-15	11.6344	-1.3799

SAP Output-Pile Forces-2in Degredation-Linear Analysis-Pinned Column Connection-20130214

TABLE: Element Forces - Frames									
Frame	Station	OutputCase	CaseType	P	V2	V3	T	M2	M3
Text	ft	Text	Text	Kip	Kip	Kip	Kip-ft	Kip-ft	Kip-ft
982	0	LC2-1 +X Dir.	Combination	-13.575	-0.5	3.413	-0.2106	8.2748	0.00001502
982	1.625	LC2-1 +X Dir.	Combination	-13.609	-0.486	3.413	-0.2106	2.7279	0.8015
982	1.625	LC2-1 +X Dir.	Combination	-13.609	-0.486	3.413	-0.2106	2.7279	0.8015
982	2.4375	LC2-1 +X Dir.	Combination	-13.625	-0.479	3.413	-0.2106	-0.0455	1.1937
982	3.25	LC2-1 +X Dir.	Combination	-13.642	-0.472	3.413	-0.2106	-2.8189	1.5802
982	3.25	LC2-1 +X Dir.	Combination	-13.642	-0.472	3.413	-0.2106	-2.8189	1.5802
982	4.875	LC2-1 +X Dir.	Combination	-13.676	-0.458	3.413	-0.2106	-8.3658	2.3361
982	0	LC4-1 +X Dir.	Combination	-10.57	-0.603	3.385	-0.2057	8.195	0.00001178
982	1.625	LC4-1 +X Dir.	Combination	-10.596	-0.592	3.385	-0.2057	2.6939	0.9706
982	1.625	LC4-1 +X Dir.	Combination	-10.596	-0.592	3.385	-0.2057	2.6939	0.9706
982	2.4375	LC4-1 +X Dir.	Combination	-10.608	-0.587	3.385	-0.2057	-0.0567	1.4495
982	3.25	LC4-1 +X Dir.	Combination	-10.621	-0.581	3.385	-0.2057	-2.8072	1.9241
982	3.25	LC4-1 +X Dir.	Combination	-10.621	-0.581	3.385	-0.2057	-2.8072	1.9241
982	4.875	LC4-1 +X Dir.	Combination	-10.646	-0.571	3.385	-0.2057	-8.3084	2.8605
601	0	LC4-1 +X Dir.	Combination	-21.44	-0.784	2.287	0	0	5.84E-15
601	1.5	LC4-1 +X Dir.	Combination	-21.466	-0.784	2.287	0	-3.4298	1.1766
601	1.5	LC4-1 +X Dir.	Combination	-21.466	-0.784	2.287	5.574E-15	-3.4298	1.1766
601	2.25	LC4-1 +X Dir.	Combination	-21.478	-0.784	2.287	5.574E-15	-5.1447	1.765
601	3	LC4-1 +X Dir.	Combination	-21.491	-0.784	2.287	5.574E-15	-6.8596	2.3533
601	3	LC4-1 +X Dir.	Combination	-21.491	-0.784	2.287	-5.574E-15	-6.8596	2.3533
601	4.5	LC4-1 +X Dir.	Combination	-21.516	-0.784	2.287	-5.574E-15	-10.2893	3.5299
604	0	LC4-1 +X Dir.	Combination	-19.184	-0.545	2.281	0	-2.314E-14	9.992E-17
604	1.5	LC4-1 +X Dir.	Combination	-19.209	-0.545	2.281	0	-3.4211	0.8178
604	1.5	LC4-1 +X Dir.	Combination	-19.209	-0.545	2.281	-3.241E-14	-3.4211	0.8178
604	2.25	LC4-1 +X Dir.	Combination	-19.222	-0.545	2.281	-3.241E-14	-5.1316	1.2267
604	3	LC4-1 +X Dir.	Combination	-19.234	-0.545	2.281	-3.241E-14	-6.8421	1.6356
604	3	LC4-1 +X Dir.	Combination	-19.234	-0.545	2.281	3.241E-14	-6.8421	1.6356
604	4.5	LC4-1 +X Dir.	Combination	-19.26	-0.545	2.281	3.241E-14	-10.2632	2.4535
606	0	LC4-1 +X Dir.	Combination	-16.69	-0.31	2.273	0	-1.147E-14	-2.842E-15
606	1.5	LC4-1 +X Dir.	Combination	-16.715	-0.31	2.273	0	-3.4102	0.4647
606	1.5	LC4-1 +X Dir.	Combination	-16.715	-0.31	2.273	-2.201E-15	-3.4102	0.4647
606	2.25	LC4-1 +X Dir.	Combination	-16.728	-0.31	2.273	-2.201E-15	-5.1153	0.697
606	3	LC4-1 +X Dir.	Combination	-16.74	-0.31	2.273	-2.201E-15	-6.8204	0.9293
606	3	LC4-1 +X Dir.	Combination	-16.74	-0.31	2.273	2.201E-15	-6.8204	0.9293
606	4.5	LC4-1 +X Dir.	Combination	-16.766	-0.31	2.273	2.201E-15	-10.2306	1.394
793	0	LC4-1 +X Dir.	Combination	-15.344	-0.192	2.271	0	-2.274E-14	7.105E-16
793	1.5	LC4-1 +X Dir.	Combination	-15.369	-0.192	2.271	0	-3.4069	0.2887
793	1.5	LC4-1 +X Dir.	Combination	-15.369	-0.192	2.271	0	-3.4069	0.2887
793	2.25	LC4-1 +X Dir.	Combination	-15.382	-0.192	2.271	0	-5.1103	0.4331
793	3	LC4-1 +X Dir.	Combination	-15.394	-0.192	2.271	0	-6.8137	0.5774
793	3	LC4-1 +X Dir.	Combination	-15.394	-0.192	2.271	0	-6.8137	0.5774
793	4.5	LC4-1 +X Dir.	Combination	-15.42	-0.192	2.271	0	-10.2206	0.8662
799	0	LC4-1 +X Dir.	Combination	-12.527	0.042	2.267	0	-1.177E-14	-2.928E-16
799	1.5	LC4-1 +X Dir.	Combination	-12.552	0.042	2.267	0	-3.4003	-0.0631
799	1.5	LC4-1 +X Dir.	Combination	-12.552	0.042	2.267	0	-3.4003	-0.0631
799	2.25	LC4-1 +X Dir.	Combination	-12.565	0.042	2.267	0	-5.1005	-0.0947
799	3	LC4-1 +X Dir.	Combination	-12.578	0.042	2.267	0	-6.8007	-0.1262
799	3	LC4-1 +X Dir.	Combination	-12.578	0.042	2.267	0	-6.8007	-0.1262
799	4.5	LC4-1 +X Dir.	Combination	-12.603	0.042	2.267	0	-10.201	-0.1893
610	0	LC4-1 +X Dir.	Combination	-11.024	0.159	2.264	0	1.017E-14	7.48E-16
610	1.5	LC4-1 +X Dir.	Combination	-11.049	0.159	2.264	0	-3.3955	-0.2381
610	1.5	LC4-1 +X Dir.	Combination	-11.049	0.159	2.264	5.639E-16	-3.3955	-0.2381
610	2.25	LC4-1 +X Dir.	Combination	-11.062	0.159	2.264	5.639E-16	-5.0932	-0.3571
610	3	LC4-1 +X Dir.	Combination	-11.074	0.159	2.264	5.639E-16	-6.7909	-0.4762
610	3	LC4-1 +X Dir.	Combination	-11.074	0.159	2.264	-5.639E-16	-6.7909	-0.4762
610	4.5	LC4-1 +X Dir.	Combination	-11.099	0.159	2.264	-5.639E-16	-10.1864	-0.7143

SAP Output-Pile Forces-2in Degredation-Linear Analysis-Pinned Column Connection-20130214

TABLE: Element Forces - Frames									
Frame	Station	OutputCase	CaseType	P	V2	V3	T	M2	M3
Text	ft	Text	Text	Kip	Kip	Kip	Kip-ft	Kip-ft	Kip-ft
850	0	LC4-1 +X Dir.	Combination	9.274	1.427	1.398	0	-1.217E-14	5.737E-15
850	1.5	LC4-1 +X Dir.	Combination	9.249	1.427	1.398	0	-2.0969	-2.1399
850	1.5	LC4-1 +X Dir.	Combination	9.249	1.427	1.398	0	-2.0969	-2.1399
850	2.25	LC4-1 +X Dir.	Combination	9.237	1.427	1.398	0	-3.1454	-3.2098
850	3	LC4-1 +X Dir.	Combination	9.224	1.427	1.398	0	-4.1939	-4.2797
850	3	LC4-1 +X Dir.	Combination	9.224	1.427	1.398	0	-4.1939	-4.2797
850	4.5	LC4-1 +X Dir.	Combination	9.199	1.427	1.398	0	-6.2908	-6.4196
849	0	LC4-1 +X Dir.	Combination	8.057	1.433	1.19	0	5.995E-16	1.14E-14
849	1.5	LC4-1 +X Dir.	Combination	8.032	1.433	1.19	0	-1.7856	-2.1496
849	1.5	LC4-1 +X Dir.	Combination	8.032	1.433	1.19	0	-1.7856	-2.1496
849	2.25	LC4-1 +X Dir.	Combination	8.019	1.433	1.19	0	-2.6784	-3.2244
849	3	LC4-1 +X Dir.	Combination	8.007	1.433	1.19	0	-3.5713	-4.2992
849	3	LC4-1 +X Dir.	Combination	8.007	1.433	1.19	0	-3.5713	-4.2992
849	4.5	LC4-1 +X Dir.	Combination	7.982	1.433	1.19	0	-5.3569	-6.4487
922	0	LC4-1 +X Dir.	Combination	7.376	1.372	1.294	0	0	1.716E-14
922	1.5	LC4-1 +X Dir.	Combination	7.35	1.372	1.294	0	-1.9417	-2.0583
922	1.5	LC4-1 +X Dir.	Combination	7.35	1.372	1.294	-9.198E-15	-1.9417	-2.0583
922	2.25	LC4-1 +X Dir.	Combination	7.338	1.372	1.294	-9.198E-15	-2.9125	-3.0875
922	3	LC4-1 +X Dir.	Combination	7.325	1.372	1.294	-9.198E-15	-3.8834	-4.1166
922	3	LC4-1 +X Dir.	Combination	7.325	1.372	1.294	9.198E-15	-3.8834	-4.1166
922	4.5	LC4-1 +X Dir.	Combination	7.3	1.372	1.294	9.198E-15	-5.8251	-6.1749
365	0	LC4-1 +X Dir.	Combination	6.636	1.311	1.398	0	5.485E-15	-5.653E-15
365	1.5	LC4-1 +X Dir.	Combination	6.611	1.311	1.398	0	-2.0973	-1.9665
365	1.5	LC4-1 +X Dir.	Combination	6.611	1.311	1.398	5.822E-16	-2.0973	-1.9665
365	2.25	LC4-1 +X Dir.	Combination	6.598	1.311	1.398	5.822E-16	-3.1459	-2.9498
365	3	LC4-1 +X Dir.	Combination	6.586	1.311	1.398	5.822E-16	-4.1945	-3.9331
365	3	LC4-1 +X Dir.	Combination	6.586	1.311	1.398	-5.822E-16	-4.1945	-3.9331
365	4.5	LC4-1 +X Dir.	Combination	6.56	1.311	1.398	-5.822E-16	-6.2918	-5.8996
848	0	LC4-1 +X Dir.	Combination	6.493	1.437	0.981	0	6.084E-15	1.137E-14
848	1.5	LC4-1 +X Dir.	Combination	6.468	1.437	0.981	0	-1.4721	-2.1557
848	1.5	LC4-1 +X Dir.	Combination	6.468	1.437	0.981	-6.973E-15	-1.4721	-2.1557
848	2.25	LC4-1 +X Dir.	Combination	6.455	1.437	0.981	-6.973E-15	-2.2081	-3.2335
848	3	LC4-1 +X Dir.	Combination	6.442	1.437	0.981	-6.973E-15	-2.9442	-4.3113
848	3	LC4-1 +X Dir.	Combination	6.442	1.437	0.981	6.973E-15	-2.9442	-4.3113
848	4.5	LC4-1 +X Dir.	Combination	6.417	1.437	0.981	6.973E-15	-4.4163	-6.467
938	0	LC4-1 +X Dir.	Combination	5.995	1.378	1.086	0	-1.998E-16	5.678E-15
938	1.5	LC4-1 +X Dir.	Combination	5.969	1.378	1.086	0	-1.6292	-2.0668
938	1.5	LC4-1 +X Dir.	Combination	5.969	1.378	1.086	-7.718E-15	-1.6292	-2.0668
938	2.25	LC4-1 +X Dir.	Combination	5.957	1.378	1.086	-7.718E-15	-2.4439	-3.1002
938	3	LC4-1 +X Dir.	Combination	5.944	1.378	1.086	-7.718E-15	-3.2585	-4.1336
938	3	LC4-1 +X Dir.	Combination	5.944	1.378	1.086	7.718E-15	-3.2585	-4.1336
938	4.5	LC4-1 +X Dir.	Combination	5.919	1.378	1.086	7.718E-15	-4.8877	-6.2004
850	0	LC2-1 +X Dir.	Combination	5.875	1.433	1.313	0	-1.243E-14	5.755E-15
850	1.5	LC2-1 +X Dir.	Combination	5.841	1.433	1.313	0	-1.9702	-2.15
850	1.5	LC2-1 +X Dir.	Combination	5.841	1.433	1.313	0	-1.9702	-2.15
850	2.25	LC2-1 +X Dir.	Combination	5.824	1.433	1.313	0	-2.9553	-3.225
850	3	LC2-1 +X Dir.	Combination	5.808	1.433	1.313	0	-3.9404	-4.3
850	3	LC2-1 +X Dir.	Combination	5.808	1.433	1.313	0	-3.9404	-4.3
905	0	LC4-1 +X Dir.	Combination	5.78	1.251	1.503	0	-1.117E-14	5.731E-15
850	4.5	LC2-1 +X Dir.	Combination	5.774	1.433	1.313	0	-5.9106	-6.45
905	1.5	LC4-1 +X Dir.	Combination	5.754	1.251	1.503	0	-2.2544	-1.8763
905	1.5	LC4-1 +X Dir.	Combination	5.754	1.251	1.503	9.568E-15	-2.2544	-1.8763
905	2.25	LC4-1 +X Dir.	Combination	5.742	1.251	1.503	9.568E-15	-3.3816	-2.8144
905	3	LC4-1 +X Dir.	Combination	5.729	1.251	1.503	9.568E-15	-4.5088	-3.7526
905	3	LC4-1 +X Dir.	Combination	5.729	1.251	1.503	-9.568E-15	-4.5088	-3.7526
905	4.5	LC4-1 +X Dir.	Combination	5.704	1.251	1.503	-9.568E-15	-6.7632	-5.6289

SAP Output-Pile Forces-2in Degredation-Linear Analysis-Pinned Column Connection-20130214

TABLE: Element Forces - Frames									
Frame	Station	OutputCase	CaseType	P	V2	V3	T	M2	M3
529	4.5	LC2-2 -Y Dir.	Combination	-46.173	-0.64	-0.41	0	1.8449	2.8809
529	3	LC2-2 -Y Dir.	Combination	-46.14	-0.64	-0.41	0	1.2299	1.9206
529	3	LC2-2 -Y Dir.	Combination	-46.14	-0.64	-0.41	0	1.2299	1.9206
529	2.25	LC2-2 -Y Dir.	Combination	-46.123	-0.64	-0.41	0	0.9225	1.4405
529	1.5	LC2-2 -Y Dir.	Combination	-46.106	-0.64	-0.41	0	0.615	0.9603
529	1.5	LC2-2 -Y Dir.	Combination	-46.106	-0.64	-0.41	0	0.615	0.9603
529	4.5	LC2-1 +X Dir.	Combination	-46.097	-0.769	-0.758	0	3.4131	3.4622
529	0	LC2-2 -Y Dir.	Combination	-46.072	-0.64	-0.41	0	-6.217E-16	-2.665E-16
529	3	LC2-1 +X Dir.	Combination	-46.063	-0.769	-0.758	0	2.2754	2.3081
529	3	LC2-1 +X Dir.	Combination	-46.063	-0.769	-0.758	0	2.2754	2.3081
529	2.25	LC2-1 +X Dir.	Combination	-46.047	-0.769	-0.758	0	1.7065	1.7311
529	1.5	LC2-1 +X Dir.	Combination	-46.03	-0.769	-0.758	0	1.1377	1.1541
529	1.5	LC2-1 +X Dir.	Combination	-46.03	-0.769	-0.758	0	1.1377	1.1541
529	0	LC2-1 +X Dir.	Combination	-45.996	-0.769	-0.758	0	1.155E-15	-2.665E-16
530	4.5	LC2-2 -Y Dir.	Combination	-45.813	-0.63	-0.42	0	1.8898	2.8353
530	3	LC2-2 -Y Dir.	Combination	-45.78	-0.63	-0.42	0	1.2598	1.8902
530	3	LC2-2 -Y Dir.	Combination	-45.78	-0.63	-0.42	0	1.2598	1.8902
530	2.25	LC2-2 -Y Dir.	Combination	-45.763	-0.63	-0.42	0	0.9449	1.4176
530	1.5	LC2-2 -Y Dir.	Combination	-45.746	-0.63	-0.42	0	0.6299	0.9451
530	1.5	LC2-2 -Y Dir.	Combination	-45.746	-0.63	-0.42	0	0.6299	0.9451
530	0	LC2-2 -Y Dir.	Combination	-45.712	-0.63	-0.42	0	-2.487E-15	-2.859E-15
723	4.5	LC2-1 +X Dir.	Combination	-45.474	-0.881	-0.632	-2.807E-16	2.8446	3.9636
723	3	LC2-1 +X Dir.	Combination	-45.44	-0.881	-0.632	2.807E-16	1.8964	2.6424
723	3	LC2-1 +X Dir.	Combination	-45.44	-0.881	-0.632	-2.807E-16	1.8964	2.6424
723	2.25	LC2-1 +X Dir.	Combination	-45.423	-0.881	-0.632	2.807E-16	1.4223	1.9818
723	1.5	LC2-1 +X Dir.	Combination	-45.407	-0.881	-0.632	0	0.9482	1.3212
723	1.5	LC2-1 +X Dir.	Combination	-45.407	-0.881	-0.632	2.807E-16	0.9482	1.3212
723	0	LC2-1 +X Dir.	Combination	-45.373	-0.881	-0.632	0	-1.821E-15	-5.818E-15
726	4.5	LC2-2 -Y Dir.	Combination	-45.07	-0.635	-0.411	0	1.85	2.8578
726	3	LC2-2 -Y Dir.	Combination	-45.037	-0.635	-0.411	0	1.2333	1.9052
726	3	LC2-2 -Y Dir.	Combination	-45.037	-0.635	-0.411	0	1.2333	1.9052
726	2.25	LC2-2 -Y Dir.	Combination	-45.02	-0.635	-0.411	0	0.925	1.4289
726	1.5	LC2-2 -Y Dir.	Combination	-45.003	-0.635	-0.411	0	0.6167	0.9526
726	1.5	LC2-2 -Y Dir.	Combination	-45.003	-0.635	-0.411	0	0.6167	0.9526
726	0	LC2-2 -Y Dir.	Combination	-44.969	-0.635	-0.411	0	2.665E-16	1.665E-17
776	4.5	LC2-1 +X Dir.	Combination	-44.59	-0.769	-0.652	-2.896E-16	2.9346	3.4594
776	3	LC2-1 +X Dir.	Combination	-44.556	-0.769	-0.652	2.896E-16	1.9564	2.3063
776	3	LC2-1 +X Dir.	Combination	-44.556	-0.769	-0.652	-2.896E-16	1.9564	2.3063
776	2.25	LC2-1 +X Dir.	Combination	-44.539	-0.769	-0.652	2.896E-16	1.4673	1.7297
531	4.5	LC2-2 -Y Dir.	Combination	-44.525	-0.622	-0.427	0	1.9224	2.7996
776	1.5	LC2-1 +X Dir.	Combination	-44.522	-0.769	-0.652	0	0.9782	1.1531
776	1.5	LC2-1 +X Dir.	Combination	-44.522	-0.769	-0.652	2.896E-16	0.9782	1.1531
531	3	LC2-2 -Y Dir.	Combination	-44.491	-0.622	-0.427	0	1.2816	1.8664
531	3	LC2-2 -Y Dir.	Combination	-44.491	-0.622	-0.427	0	1.2816	1.8664
776	0	LC2-1 +X Dir.	Combination	-44.488	-0.769	-0.652	0	0	-5.634E-15
531	2.25	LC2-2 -Y Dir.	Combination	-44.474	-0.622	-0.427	0	0.9612	1.3998
531	1.5	LC2-2 -Y Dir.	Combination	-44.457	-0.622	-0.427	0	0.6408	0.9332
531	1.5	LC2-2 -Y Dir.	Combination	-44.457	-0.622	-0.427	0	0.6408	0.9332
531	0	LC2-2 -Y Dir.	Combination	-44.424	-0.622	-0.427	0	8.882E-17	4.996E-17
734	4.5	LC2-2 -Y Dir.	Combination	-44.352	-0.626	-0.423	-9.387E-17	1.9025	2.8164
776	4.5	LC2-2 -Y Dir.	Combination	-44.327	-0.64	-0.403	-1.788E-16	1.8114	2.8782
734	3	LC2-2 -Y Dir.	Combination	-44.318	-0.626	-0.423	9.387E-17	1.2683	1.8776
734	3	LC2-2 -Y Dir.	Combination	-44.318	-0.626	-0.423	-9.387E-17	1.2683	1.8776
734	2.25	LC2-2 -Y Dir.	Combination	-44.302	-0.626	-0.423	9.387E-17	0.9512	1.4082
776	3	LC2-2 -Y Dir.	Combination	-44.293	-0.64	-0.403	1.788E-16	1.2076	1.9188
776	3	LC2-2 -Y Dir.	Combination	-44.293	-0.64	-0.403	-1.788E-16	1.2076	1.9188
734	1.5	LC2-2 -Y Dir.	Combination	-44.285	-0.626	-0.423	0	0.6342	0.9388

SAP Output-Pile Forces-2in Degredation-Linear Analysis-Pinned Column Connection-20130214

TABLE: Element Forces - Frames									
Frame	Station	OutputCase	CaseType	P	V2	V3	T	M2	M3
850	0	SC4-1 +X Dir.	Combination	5.372	0.892	0.863	0	-7.638E-15	3.588E-15
850	1.5	SC4-1 +X Dir.	Combination	5.355	0.892	0.863	0	-1.2947	-1.3387
850	1.5	SC4-1 +X Dir.	Combination	5.355	0.892	0.863	0	-1.2947	-1.3387
850	2.25	SC4-1 +X Dir.	Combination	5.346	0.892	0.863	0	-1.9421	-2.008
850	3	SC4-1 +X Dir.	Combination	5.338	0.892	0.863	0	-2.5895	-2.6774
850	3	SC4-1 +X Dir.	Combination	5.338	0.892	0.863	0	-2.5895	-2.6774
850	4.5	SC4-1 +X Dir.	Combination	5.321	0.892	0.863	0	-3.8842	-4.016
849	0	SC4-1 +X Dir.	Combination	4.576	0.896	0.733	0	3.997E-16	7.124E-15
849	1.5	SC4-1 +X Dir.	Combination	4.559	0.896	0.733	0	-1.0999	-1.3446
849	1.5	SC4-1 +X Dir.	Combination	4.559	0.896	0.733	0	-1.0999	-1.3446
849	2.25	SC4-1 +X Dir.	Combination	4.551	0.896	0.733	0	-1.6499	-2.0168
849	3	SC4-1 +X Dir.	Combination	4.542	0.896	0.733	0	-2.1999	-2.6891
849	3	SC4-1 +X Dir.	Combination	4.542	0.896	0.733	0	-2.1999	-2.6891
849	4.5	SC4-1 +X Dir.	Combination	4.525	0.896	0.733	0	-3.2998	-4.0337
922	0	SC4-1 +X Dir.	Combination	4.154	0.858	0.798	0	0	1.073E-14
922	1.5	SC4-1 +X Dir.	Combination	4.137	0.858	0.798	0	-1.1976	-1.2876
922	1.5	SC4-1 +X Dir.	Combination	4.137	0.858	0.798	-5.673E-15	-1.1976	-1.2876
922	2.25	SC4-1 +X Dir.	Combination	4.129	0.858	0.798	-5.673E-15	-1.7964	-1.9313
922	3	SC4-1 +X Dir.	Combination	4.121	0.858	0.798	-5.673E-15	-2.3952	-2.5751
922	3	SC4-1 +X Dir.	Combination	4.121	0.858	0.798	5.673E-15	-2.3952	-2.5751
922	4.5	SC4-1 +X Dir.	Combination	4.104	0.858	0.798	5.673E-15	-3.5928	-3.8627
365	0	SC4-1 +X Dir.	Combination	3.699	0.82	0.863	0	3.419E-15	-3.532E-15
365	1.5	SC4-1 +X Dir.	Combination	3.682	0.82	0.863	0	-1.295	-1.2303
365	1.5	SC4-1 +X Dir.	Combination	3.682	0.82	0.863	3.642E-16	-1.295	-1.2303
365	2.25	SC4-1 +X Dir.	Combination	3.674	0.82	0.863	3.642E-16	-1.9424	-1.8454
365	3	SC4-1 +X Dir.	Combination	3.665	0.82	0.863	3.642E-16	-2.5899	-2.4605
365	3	SC4-1 +X Dir.	Combination	3.665	0.82	0.863	-3.642E-16	-2.5899	-2.4605
365	4.5	SC4-1 +X Dir.	Combination	3.648	0.82	0.863	-3.642E-16	-3.8849	-3.6908
848	0	SC4-1 +X Dir.	Combination	3.565	0.899	0.603	0	3.819E-15	7.11E-15
848	1.5	SC4-1 +X Dir.	Combination	3.548	0.899	0.603	0	-0.9038	-1.3484
848	1.5	SC4-1 +X Dir.	Combination	3.548	0.899	0.603	-4.281E-15	-0.9038	-1.3484
848	2.25	SC4-1 +X Dir.	Combination	3.54	0.899	0.603	-4.281E-15	-1.3557	-2.0225
848	3	SC4-1 +X Dir.	Combination	3.532	0.899	0.603	-4.281E-15	-1.8076	-2.6967
848	3	SC4-1 +X Dir.	Combination	3.532	0.899	0.603	4.281E-15	-1.8076	-2.6967
848	4.5	SC4-1 +X Dir.	Combination	3.515	0.899	0.603	4.281E-15	-2.7114	-4.0451
938	0	SC4-1 +X Dir.	Combination	3.257	0.862	0.668	0	-1.332E-16	3.549E-15
938	1.5	SC4-1 +X Dir.	Combination	3.24	0.862	0.668	0	-1.0021	-1.2928
938	1.5	SC4-1 +X Dir.	Combination	3.24	0.862	0.668	-4.747E-15	-1.0021	-1.2928
938	2.25	SC4-1 +X Dir.	Combination	3.231	0.862	0.668	-4.747E-15	-1.5032	-1.9391
938	3	SC4-1 +X Dir.	Combination	3.223	0.862	0.668	-4.747E-15	-2.0042	-2.5855
938	3	SC4-1 +X Dir.	Combination	3.223	0.862	0.668	4.747E-15	-2.0042	-2.5855
938	4.5	SC4-1 +X Dir.	Combination	3.206	0.862	0.668	4.747E-15	-3.0063	-3.8783
905	0	SC4-1 +X Dir.	Combination	3.172	0.783	0.929	0	-6.972E-15	3.584E-15
905	1.5	SC4-1 +X Dir.	Combination	3.155	0.783	0.929	0	-1.3933	-1.1738
905	1.5	SC4-1 +X Dir.	Combination	3.155	0.783	0.929	5.905E-15	-1.3933	-1.1738
905	2.25	SC4-1 +X Dir.	Combination	3.147	0.783	0.929	5.905E-15	-2.09	-1.7608
905	3	SC4-1 +X Dir.	Combination	3.138	0.783	0.929	5.905E-15	-2.7866	-2.3477
905	3	SC4-1 +X Dir.	Combination	3.138	0.783	0.929	-5.905E-15	-2.7866	-2.3477
905	4.5	SC4-1 +X Dir.	Combination	3.121	0.783	0.929	-5.905E-15	-4.1799	-3.5215
364	0	SC4-1 +X Dir.	Combination	2.92	0.824	0.733	0	2.665E-16	4.684E-17
364	1.5	SC4-1 +X Dir.	Combination	2.903	0.824	0.733	0	-1.1001	-1.2361
364	1.5	SC4-1 +X Dir.	Combination	2.903	0.824	0.733	5.211E-15	-1.1001	-1.2361
364	2.25	SC4-1 +X Dir.	Combination	2.895	0.824	0.733	5.211E-15	-1.6502	-1.8542
364	3	SC4-1 +X Dir.	Combination	2.886	0.824	0.733	5.211E-15	-2.2002	-2.4722
364	3	SC4-1 +X Dir.	Combination	2.886	0.824	0.733	-5.211E-15	-2.2002	-2.4722
364	4.5	SC4-1 +X Dir.	Combination	2.869	0.824	0.733	-5.211E-15	-3.3003	-3.7083
843	0	SC4-1 +X Dir.	Combination	2.632	0.746	0.995	0	5.329E-16	7.17E-15

SAP Output-Pile Forces-2in Degredation-Linear Analysis-Pinned Column Connection-20130214

TABLE: Element Forces - Frames									
Frame	Station	OutputCase	CaseType	P	V2	V3	T	M2	M3
529	4.5	SC2-2 -Y Dir.	Combination	-36.379	-0.402	-0.328	0	1.475	1.8099
529	3	SC2-2 -Y Dir.	Combination	-36.351	-0.402	-0.328	0	0.9833	1.2066
529	3	SC2-2 -Y Dir.	Combination	-36.351	-0.402	-0.328	0	0.9833	1.2066
529	2.25	SC2-2 -Y Dir.	Combination	-36.337	-0.402	-0.328	0	0.7375	0.9049
529	4.5	SC2-1 +X Dir.	Combination	-36.332	-0.483	-0.546	0	2.4551	2.1732
529	1.5	SC2-2 -Y Dir.	Combination	-36.323	-0.402	-0.328	0	0.4917	0.6033
529	1.5	SC2-2 -Y Dir.	Combination	-36.323	-0.402	-0.328	0	0.4917	0.6033
529	3	SC2-1 +X Dir.	Combination	-36.304	-0.483	-0.546	0	1.6367	1.4488
529	3	SC2-1 +X Dir.	Combination	-36.304	-0.483	-0.546	0	1.6367	1.4488
529	0	SC2-2 -Y Dir.	Combination	-36.295	-0.402	-0.328	0	-4.441E-16	-2.22E-16
529	2.25	SC2-1 +X Dir.	Combination	-36.289	-0.483	-0.546	0	1.2276	1.0866
529	1.5	SC2-1 +X Dir.	Combination	-36.275	-0.483	-0.546	0	0.8184	0.7244
529	1.5	SC2-1 +X Dir.	Combination	-36.275	-0.483	-0.546	0	0.8184	0.7244
529	0	SC2-1 +X Dir.	Combination	-36.247	-0.483	-0.546	0	6.661E-16	-2.22E-16
530	4.5	SC2-2 -Y Dir.	Combination	-36.144	-0.396	-0.336	0	1.5107	1.781
530	3	SC2-2 -Y Dir.	Combination	-36.115	-0.396	-0.336	0	1.0071	1.1873
530	3	SC2-2 -Y Dir.	Combination	-36.115	-0.396	-0.336	0	1.0071	1.1873
530	2.25	SC2-2 -Y Dir.	Combination	-36.101	-0.396	-0.336	0	0.7553	0.8905
530	1.5	SC2-2 -Y Dir.	Combination	-36.087	-0.396	-0.336	0	0.5036	0.5937
530	1.5	SC2-2 -Y Dir.	Combination	-36.087	-0.396	-0.336	0	0.5036	0.5937
530	0	SC2-2 -Y Dir.	Combination	-36.059	-0.396	-0.336	0	-1.776E-15	-1.79E-15
723	4.5	SC2-1 +X Dir.	Combination	-35.692	-0.552	-0.465	-2.063E-16	2.0907	2.4853
723	3	SC2-1 +X Dir.	Combination	-35.664	-0.552	-0.465	2.063E-16	1.3938	1.6568
723	3	SC2-1 +X Dir.	Combination	-35.664	-0.552	-0.465	-2.063E-16	1.3938	1.6568
723	2.25	SC2-1 +X Dir.	Combination	-35.65	-0.552	-0.465	2.063E-16	1.0454	1.2426
723	1.5	SC2-1 +X Dir.	Combination	-35.636	-0.552	-0.465	0	0.6969	0.8284
723	1.5	SC2-1 +X Dir.	Combination	-35.636	-0.552	-0.465	2.063E-16	0.6969	0.8284
723	0	SC2-1 +X Dir.	Combination	-35.608	-0.552	-0.465	0	-1.221E-15	-3.664E-15
726	4.5	SC2-2 -Y Dir.	Combination	-35.58	-0.399	-0.329	0	1.4807	1.7952
726	3	SC2-2 -Y Dir.	Combination	-35.552	-0.399	-0.329	0	0.9871	1.1968
726	3	SC2-2 -Y Dir.	Combination	-35.552	-0.399	-0.329	0	0.9871	1.1968
726	2.25	SC2-2 -Y Dir.	Combination	-35.538	-0.399	-0.329	0	0.7403	0.8976
726	1.5	SC2-2 -Y Dir.	Combination	-35.524	-0.399	-0.329	0	0.4936	0.5984
726	1.5	SC2-2 -Y Dir.	Combination	-35.524	-0.399	-0.329	0	0.4936	0.5984
726	0	SC2-2 -Y Dir.	Combination	-35.496	-0.399	-0.329	0	2.22E-16	1.388E-17
776	4.5	SC2-1 +X Dir.	Combination	-35.18	-0.482	-0.479	-2.125E-16	2.1537	2.1709
531	4.5	SC2-2 -Y Dir.	Combination	-35.167	-0.391	-0.342	0	1.5376	1.7596
776	3	SC2-1 +X Dir.	Combination	-35.152	-0.482	-0.479	2.125E-16	1.4358	1.4473
776	3	SC2-1 +X Dir.	Combination	-35.152	-0.482	-0.479	-2.125E-16	1.4358	1.4473
531	3	SC2-2 -Y Dir.	Combination	-35.139	-0.391	-0.342	0	1.025	1.1731
531	3	SC2-2 -Y Dir.	Combination	-35.139	-0.391	-0.342	0	1.025	1.1731
776	2.25	SC2-1 +X Dir.	Combination	-35.138	-0.482	-0.479	2.125E-16	1.0769	1.0854
531	2.25	SC2-2 -Y Dir.	Combination	-35.125	-0.391	-0.342	0	0.7688	0.8798
776	1.5	SC2-1 +X Dir.	Combination	-35.124	-0.482	-0.479	0	0.7179	0.7236
776	1.5	SC2-1 +X Dir.	Combination	-35.124	-0.482	-0.479	2.125E-16	0.7179	0.7236
531	1.5	SC2-2 -Y Dir.	Combination	-35.111	-0.391	-0.342	0	0.5125	0.5865
531	1.5	SC2-2 -Y Dir.	Combination	-35.111	-0.391	-0.342	0	0.5125	0.5865
776	0	SC2-1 +X Dir.	Combination	-35.096	-0.482	-0.479	0	0	-3.511E-15
531	0	SC2-2 -Y Dir.	Combination	-35.083	-0.391	-0.342	0	0	4.163E-17
734	4.5	SC2-2 -Y Dir.	Combination	-35.059	-0.393	-0.338	-7.514E-17	1.5227	1.7695
734	3	SC2-2 -Y Dir.	Combination	-35.03	-0.393	-0.338	7.514E-17	1.0152	1.1797
734	3	SC2-2 -Y Dir.	Combination	-35.03	-0.393	-0.338	-7.514E-17	1.0152	1.1797
776	4.5	SC2-2 -Y Dir.	Combination	-35.016	-0.402	-0.323	-1.433E-16	1.4517	1.8077
734	2.25	SC2-2 -Y Dir.	Combination	-35.016	-0.393	-0.338	7.514E-17	0.7614	0.8848
734	1.5	SC2-2 -Y Dir.	Combination	-35.002	-0.393	-0.338	0	0.5076	0.5898
734	1.5	SC2-2 -Y Dir.	Combination	-35.002	-0.393	-0.338	7.514E-17	0.5076	0.5898
726	4.5	SC2-1 +X Dir.	Combination	-34.999	-0.412	-0.516	0	2.3241	1.8546

SAP Output-Pile Forces-2in Degredation-Linear Analysis-Pinned Column Connection-20130214

8-4-5-3
Concrete Cap

TABLE: Element Forces - Frames									
Frame	Station	OutputCase	CaseType	P	V2	V3	T	M2	M3
Text	ft	Text	Text	Kip	Kip	Kip	Kip-ft	Kip-ft	Kip-ft
C6-C7	0	LC4-1 +X Dir.	Combination	20.093	49.25	-19.8	-249.593	-1.2346	130.7034
C7-C8	5.0094	LC4-1 -X Dir.	Combination	0	4.567	-0.048	-115.2268	-0.2273	119.7462
C7-C8	5.0094	LC4-1 -X Dir.	Combination	0	4.567	-0.048	-115.2268	-0.2273	119.7462
C7-C8	3.7594	LC4-1 -X Dir.	Combination	2.297	0.915	-0.124	-115.2268	-0.2874	115.3263
C7-C8	3.7594	LC4-1 -X Dir.	Combination	0	-11.638	-0.048	-115.2268	-0.2874	115.3263
C7-C8	2.5094	LC4-1 -X Dir.	Combination	2.297	-15.29	-0.124	-115.2268	-0.4419	106.3418
C7-C8	2.5094	LC4-1 -X Dir.	Combination	2.297	-15.29	-0.124	-115.2268	-0.4419	106.3418
C7-C8	6.2594	LC4-1 -X Dir.	Combination	0	20.772	-0.048	-115.2268	-0.1672	103.9099
C7-C8	6.2594	LC4-1 -X Dir.	Combination	0	6.621	-0.032	-115.2268	-0.1672	103.9099
C7-C8	7.5094	LC4-1 -X Dir.	Combination	0	22.826	-0.032	-115.2268	-0.1275	85.5056
C7-C8	7.5094	LC4-1 -X Dir.	Combination	0	22.826	-0.032	-115.2268	-0.1275	85.5056
C7-C8	1.2594	LC4-1 -X Dir.	Combination	7.941	-6.641	-0.271	-115.2268	-0.4825	83.7577
C7-C8	1.2594	LC4-1 -X Dir.	Combination	-9.737	-17.544	0.115	-115.2268	-0.4825	83.7577
C7-C8	0	LC4-1 -X Dir.	Combination	-7.941	-4.556	0.044	-115.2268	-0.6254	76.7069
C7-C8	8.7594	LC4-1 -X Dir.	Combination	0	39.031	-0.032	-115.2268	-0.0879	46.8449
C7-C8	8.7594	LC4-1 -X Dir.	Combination	0	23.337	-0.023	-115.2268	-0.0879	46.8449
C6-C7	19.3824	LC4-1 -X Dir.	Combination	1.231E-17	-3.283	0.069	-203.57	-0.3102	42.211
C6-C7	19.3824	LC4-1 -X Dir.	Combination	-9.066E-18	-3.283	0.069	-203.57	-0.3102	42.211
C6-C7	20.5225	LC4-1 -X Dir.	Combination	-9.066E-18	11.498	0.069	-203.57	-0.3891	37.5282
C6-C7	20.5225	LC4-1 -X Dir.	Combination	-3.132E-18	1.058	0.104	-203.57	-0.3891	37.5282
C6-C7	18.2423	LC4-1 -X Dir.	Combination	-5.824E-18	-7.484	0.049	-203.57	-0.2314	30.0416
C6-C7	18.2423	LC4-1 -X Dir.	Combination	1.231E-17	-18.064	0.069	-203.57	-0.2314	30.0416
C6-C7	21.6627	LC4-1 -X Dir.	Combination	-3.132E-18	15.839	0.104	-203.57	-0.5073	27.8954
C6-C7	21.6627	LC4-1 -X Dir.	Combination	3.132E-18	15.839	0.104	-203.57	-0.5073	27.8954
C6-C7	17.1021	LC4-1 -X Dir.	Combination	7.72E-18	-22.265	0.049	-203.57	-0.1761	13.0825
C6-C7	17.1021	LC4-1 -X Dir.	Combination	-5.824E-18	-22.265	0.049	-203.57	-0.1761	13.0825
C7-C8	10.0094	LC4-1 -X Dir.	Combination	0	39.542	-0.023	-115.2268	-0.0591	7.5456
C7-C8	10.0094	LC4-1 -X Dir.	Combination	0	39.542	-0.023	-115.2268	-0.0591	7.5456
C6-C7	22.8028	LC4-1 -X Dir.	Combination	3.132E-18	30.62	0.104	-203.57	-0.6256	1.4104
C6-C7	22.8028	LC4-1 -X Dir.	Combination	-9.208	20.36	-8.253	-203.57	-0.6256	1.4104
C6-C7	1.1401	LC4-1 +X Dir.	Combination	-0.107	202.821	0.119	-249.593	9.9852	-12.9948
C6-C7	1.1401	LC4-1 +X Dir.	Combination	-0.107	202.821	0.119	-249.593	9.9852	-12.9948
C6-C7	15.962	LC4-1 -X Dir.	Combination	-4.314E-17	-26.363	0.038	-203.57	-0.1207	-20.7289
C6-C7	15.962	LC4-1 -X Dir.	Combination	7.72E-18	-37.046	0.049	-203.57	-0.1207	-20.7289
C6-C7	23.943	LC4-1 -X Dir.	Combination	-0.057	20.896	-0.05	-203.57	4.7877	-23.2893
C6-C7	23.943	LC4-1 -X Dir.	Combination	-0.057	20.896	-0.05	-203.57	4.7877	-23.2893
C3-C4	26.2594	LC4-1 -X Dir.	Combination	7.229	44.025	26.332	489.9623	-3.482	-39.9377
C6-C7	25.0831	LC4-1 -X Dir.	Combination	10.652	19.008	9.548	-203.57	-0.6264	-46.0372
C7-C8	11.2594	LC4-1 -X Dir.	Combination	0	55.747	-0.023	-115.2268	-0.0303	-52.01
C7-C8	11.2594	LC4-1 -X Dir.	Combination	0	38.55	-0.02	-115.2268	-0.0303	-52.01
C6-C7	14.8218	LC4-1 -X Dir.	Combination	5.509E-17	-41.144	0.038	-203.57	-0.0776	-59.2128
C6-C7	14.8218	LC4-1 -X Dir.	Combination	-4.314E-17	-41.144	0.038	-203.57	-0.0776	-59.2128
C6-C7	0	LC2-1 +X Dir.	Combination	19.635	45.414	-20.519	-338.7958	-1.364	-61.5324
C5-C6	26.3123	LC4-1 +X Dir.	Combination	0.415	8.212	0.218	-502.3408	-1.8415	-66.2916
C5-C6	26.3123	LC4-1 +X Dir.	Combination	0.415	8.212	0.218	-502.3408	-1.8415	-66.2916
C8-C1	25.0831	LC4-1 +X Dir.	Combination	-19.802	33.878	21.133	192.8789	-4.232	-99.8139
C5-C6	15	LC4-2 -Y Dir.	Combination	0	4.486	-0.009569	25.9977	0.2614	-108.528
C5-C6	15	LC4-2 -Y Dir.	Combination	0	-5.405	-0.029	25.9977	0.2614	-108.528
C5-C6	16.25	LC4-2 -Y Dir.	Combination	0	10.8	-0.029	25.9977	0.2974	-111.8995
C5-C6	16.25	LC4-2 -Y Dir.	Combination	0	10.8	-0.029	25.9977	0.2974	-111.8995
C5-C6	13.8123	LC4-2 -Y Dir.	Combination	0	-10.912	-0.009569	25.9977	0.2501	-112.3442

SAP Output-Cap Beam Analysis-Pinned Column Connection-20130214

TABLE: Element Forces - Frames									
Frame	Station	OutputCase	CaseType	P	V2	V3	T	M2	M3
C1-C2	13.8123	LC2-2 -Y Dir.	Combination	0	-81.544	0.006564	253.619	-0.4548	-4485.4722
C1-C2	13.8123	LC2-2 -Y Dir.	Combination	0	72.105	-0.015	-269.1668	-0.4549	-4485.4374
C1-C2	12.6246	LC2-2 -Y Dir.	Combination	0	191.751	-0.05	-269.1668	-0.4728	-4411.9902
C1-C2	12.6246	LC2-2 -Y Dir.	Combination	0	51.575	-0.015	-269.1668	-0.4728	-4411.9902
C1-C2	15.1246	LC2-2 -Y Dir.	Combination	0	-58.86	0.006564	253.619	-0.4635	-4393.3461
C1-C2	15.1246	LC2-2 -Y Dir.	Combination	0	-199.095	0.041	253.619	-0.4635	-4393.3461
C2-C3	12.5416	LC2-1 -X Dir.	Combination	0	-76.567	0.065	4.7596	-0.4543	-4294.1111
C2-C3	12.5416	LC2-1 -X Dir.	Combination	0	74.831	0.045	-512.2344	-0.4536	-4275.1837
C2-C3	13.6817	LC2-1 -X Dir.	Combination	0	-56.859	0.065	4.7596	-0.5282	-4218.049
C2-C3	13.6817	LC2-1 -X Dir.	Combination	2.193E-17	-195.564	0.102	4.7596	-0.5282	-4218.049
C2-C3	11.4014	LC2-1 -X Dir.	Combination	-4.698E-18	192.898	0.019	-512.2344	-0.4021	-4201.1005
C2-C3	11.4014	LC2-1 -X Dir.	Combination	0	55.123	0.045	-512.2344	-0.4021	-4201.1005
C1-C2	11.3746	LC2-2 -Y Dir.	Combination	0	170.144	-0.05	-269.1668	-0.5351	-4185.8055
C1-C2	11.3746	LC2-2 -Y Dir.	Combination	0	170.144	-0.05	-269.1668	-0.5351	-4185.8055
C1-C2	13.8123	LC1	Combination	0	-73.958	0.002486	263.5622	-0.1483	-4172.5997
C1-C2	13.8123	LC1	Combination	0	72.652	-0.004577	-244.4749	-0.1484	-4172.582
C1-C2	16.3746	LC2-2 -Y Dir.	Combination	0	-177.489	0.041	253.619	-0.5153	-4157.9811
C1-C2	16.3746	LC2-2 -Y Dir.	Combination	0	-177.489	0.041	253.619	-0.5153	-4157.9811
C7-C8	13.1297	LC2-1 +X Dir.	Combination	0	-63.246	0.017	-440.0707	0.0029	-4131.1928
C7-C8	13.1297	LC2-1 +X Dir.	Combination	0	71.137	0.017	-902.4888	0.0029	-4126.9932
C8-C1	12.5416	LC2-1 +X Dir.	Combination	0	71.237	0.063	-357.0527	-0.5219	-4124.7875
C8-C1	12.5416	LC2-1 +X Dir.	Combination	0	-80.987	0.085	161.9117	-0.5225	-4107.2662
C1-C2	12.6246	LC1	Combination	0	181.173	-0.016	-244.4749	-0.1538	-4100.5172
C1-C2	12.6246	LC1	Combination	0	48.7	-0.004577	-244.4749	-0.1538	-4100.5172
C7-C8	13.7594	LC2-1 +X Dir.	Combination	0	-52.362	0.017	-440.0707	-0.0078	-4094.7936
C7-C8	13.7594	LC2-1 +X Dir.	Combination	0	-172.559	0.018	-440.0707	-0.0078	-4094.7936
C1-C2	15.1246	LC1	Combination	0	-47.493	0.002486	263.5622	-0.1516	-4092.9096
C1-C2	15.1246	LC1	Combination	0	-179.999	0.014	263.5622	-0.1516	-4092.9096
C8-C1	11.4014	LC2-1 +X Dir.	Combination	2.178E-17	190.589	0.034	-357.0527	-0.4505	-4054.8019
C8-C1	11.4014	LC2-1 +X Dir.	Combination	0	51.529	0.063	-357.0527	-0.4505	-4054.8019
C8-C1	13.6817	LC2-1 +X Dir.	Combination	0	-61.279	0.085	161.9117	-0.6197	-4026.1649
C8-C1	13.6817	LC2-1 +X Dir.	Combination	-2.241E-16	-200.581	0.129	161.9117	-0.6197	-4026.1649
C7-C8	11.2594	LC2-1 +X Dir.	Combination	0	155.811	0.021	-902.4888	0.0354	-4024.1785
C7-C8	11.2594	LC2-1 +X Dir.	Combination	0	38.808	0.017	-902.4888	0.0354	-4024.1785
C2-C3	14.8218	LC2-1 -X Dir.	Combination	2.193E-17	-175.857	0.102	4.7596	-0.6442	-4006.3128
C2-C3	14.8218	LC2-1 -X Dir.	Combination	-1.449E-17	-175.857	0.102	4.7596	-0.6442	-4006.3128
C2-C3	10.2613	LC2-1 -X Dir.	Combination	-4.444E-17	173.19	0.019	-512.2344	-0.3799	-3992.404
C2-C3	10.2613	LC2-1 -X Dir.	Combination	-4.698E-18	173.19	0.019	-512.2344	-0.3799	-3992.404
C1-C2	10.1246	LC2-2 -Y Dir.	Combination	0	289.785	-0.108	-269.1668	-0.5973	-3986.6292
C1-C2	10.1246	LC2-2 -Y Dir.	Combination	0	148.538	-0.05	-269.1668	-0.5973	-3986.6292
C1-C2	17.6246	LC2-2 -Y Dir.	Combination	0	-155.882	0.041	253.619	-0.5671	-3949.6246
C1-C2	17.6246	LC2-2 -Y Dir.	Combination	0	-297.288	0.097	253.619	-0.5671	-3949.6246
C7-C8	15.0094	LC2-1 +X Dir.	Combination	0	-150.952	0.018	-440.0707	-0.0303	-3892.599
C7-C8	15.0094	LC2-1 +X Dir.	Combination	0	-150.952	0.018	-440.0707	-0.0303	-3892.599
C1-C2	11.3746	LC1	Combination	0	155.965	-0.016	-244.4749	-0.1736	-3889.8063
C1-C2	11.3746	LC1	Combination	0	155.965	-0.016	-244.4749	-0.1736	-3889.8063
C1-C2	16.3746	LC1	Combination	0	-154.791	0.014	263.5622	-0.169	-3883.6656
C1-C2	16.3746	LC1	Combination	0	-154.791	0.014	263.5622	-0.169	-3883.6656
C2-C3	12.5416	LC2-2 -Y Dir.	Combination	0	-83.727	-0.032	787.2693	-0.2889	-3871.3696
C2-C3	12.5416	LC2-2 -Y Dir.	Combination	0	52.255	-0.044	318.3337	-0.2892	-3860.1747
C8-C1	10.2613	LC2-1 +X Dir.	Combination	-1.334E-16	170.881	0.034	-357.0527	-0.4116	-3848.7381
C8-C1	10.2613	LC2-1 +X Dir.	Combination	2.178E-17	170.881	0.034	-357.0527	-0.4116	-3848.7381

SAP Output-Cap Beam Analysis-Pinned Column Connection-20130214

TABLE: Element Forces - Frames									
Frame	Station	OutputCase	CaseType	P	V2	V3	T	M2	M3
C2-C3	22.8028	LC2-1 -X Dir.	Combination	-0.793	-618.337	-21.727	4.7596	-2.741	-1204.7717
C8-C1	22.8028	LC2-1 +X Dir.	Combination	17.687	-618.269	-18.233	161.9117	-3.3512	-975.6293
C1-C2	25.1246	LC2-2 -Y Dir.	Combination	2.039	-607.194	-15.573	253.619	-2.0001	-1122.9716
C8-C1	22.8028	LC2-2 -Y Dir.	Combination	8.992	-545.898	-10.97	-301.3298	-1.9314	-1296.6797
C7-C8	23.7594	LC2-1 +X Dir.	Combination	11.134	-530.844	0.488	-440.0707	-0.3299	-1313.855
C1-C2	25.1246	LC1	Combination	0.759	-526.595	-5.119	263.5622	-0.6602	-1277.203
C2-C3	22.8028	LC4-1 -X Dir.	Combination	-0.975	-518.389	-21.578	-120.7064	-2.7118	-922.2873
C8-C1	22.8028	LC4-1 +X Dir.	Combination	17.118	-510.46	-17.438	192.8789	-3.2164	-685.8532
C8-C1	20.5225	LC2-1 +X Dir.	Combination	1.163E-15	-509.904	0.525	161.9117	-2.1534	-2093.4155
C2-C3	20.5225	LC2-1 -X Dir.	Combination	6.237E-16	-507.513	0.428	4.7596	-1.7646	-2317.106
C8-C1	22.8028	LC1	Combination	2.657	-503.11	-3.709	-144.5133	-0.6291	-1352.2882
C1-C2	22.6246	LC2-2 -Y Dir.	Combination	0	-500.646	0.299	253.619	-1.2514	-2320.5696
C1-C2	25.1246	LC4-2 -Y Dir.	Combination	1.876	-494.352	-14.476	197.1414	-1.8586	-849.2853
C2-C3	22.8028	LC2-2 -Y Dir.	Combination	-3.386	-493.321	-4.012	787.2693	-0.386	-1202.2252
C8-C1	21.6627	LC2-1 +X Dir.	Combination	1.163E-15	-490.196	0.525	161.9117	-2.7523	-1523.2875
C8-C1	21.6627	LC2-1 +X Dir.	Combination	-6.1E-16	-490.196	0.525	161.9117	-2.7523	-1523.2875
C2-C3	21.6627	LC2-1 -X Dir.	Combination	6.237E-16	-487.805	0.428	4.7596	-2.2528	-1749.704
C2-C3	21.6627	LC2-1 -X Dir.	Combination	-3.095E-16	-487.805	0.428	4.7596	-2.2528	-1749.704
C1-C2	23.8746	LC2-2 -Y Dir.	Combination	0	-479.039	0.299	253.619	-1.6258	-1708.2664
C1-C2	23.8746	LC2-2 -Y Dir.	Combination	0	-479.039	0.299	253.619	-1.6258	-1708.2664
C8-C1	22.8028	LC2-1 +X Dir.	Combination	-6.1E-16	-470.488	0.525	161.9117	-3.3512	-975.6293
C2-C3	22.8028	LC2-1 -X Dir.	Combination	-3.095E-16	-468.098	0.428	4.7596	-2.741	-1204.7717
C2-C3	22.8028	LC1	Combination	0.849	-466.427	-0.694	585.5082	-0.1362	-1318.2604
C1-C2	25.1246	LC2-1 -X Dir.	Combination	-2.473	-465.564	-7.33	-399.1171	-0.8045	-1328.4299
C7-C8	23.7594	LC4-1 +X Dir.	Combination	11.369	-464.602	0.431	-376.0318	-0.3445	-1014.0059
C3-C4	22.5	LC2-1 -X Dir.	Combination	-2.069	-463.284	-7.25	638.91	-2.5681	-1400.6856
C1-C2	25.1246	LC2-2 -Y Dir.	Combination	0	-457.432	0.299	253.619	-2.0001	-1122.9716
C1-C2	25.1246	LC3-1 +X Dir.	Combination	0.651	-451.367	-4.387	225.9104	-0.5659	-1094.7454
C1-C2	25.1246	LC3-2 +Y Dir.	Combination	0.651	-451.367	-4.387	225.9104	-0.5659	-1094.7454
C1-C2	25.1246	LC3-1 -X Dir.	Combination	0.651	-451.367	-4.387	225.9104	-0.5659	-1094.7454
C1-C2	25.1246	LC3-2 -Y Dir.	Combination	0.651	-451.367	-4.387	225.9104	-0.5659	-1094.7454
C3-C4	23.75	LC2-1 -X Dir.	Combination	-2.069	-441.677	-7.25	638.91	6.494	-835.0846
C3-C4	23.75	LC2-1 -X Dir.	Combination	-2.069	-441.677	-7.25	638.91	6.494	-835.0846
C8-C1	20.5225	LC2-2 -Y Dir.	Combination	6.679E-16	-438.692	0.304	-301.3298	-1.2388	-2252.0832
C8-C1	22.8028	LC4-2 -Y Dir.	Combination	8.423	-438.089	-10.176	-270.3627	-1.7966	-1006.9036
C1-C2	25.1246	LC2-1 +X Dir.	Combination	3.774	-437.171	-1.445	850.9379	-0.3273	-861.061
C1-C2	22.6246	LC1	Combination	0	-435.796	0.099	263.5622	-0.4129	-2303.6745
C7-C8	21.2594	LC2-1 +X Dir.	Combination	0	-432.291	0.053	-440.0707	-0.1963	-2340.5667
C8-C1	22.8028	LC3-1 +X Dir.	Combination	2.277	-431.237	-3.179	-123.8686	-0.5393	-1159.1042
C8-C1	22.8028	LC3-2 +Y Dir.	Combination	2.277	-431.237	-3.179	-123.8686	-0.5393	-1159.1042
C8-C1	22.8028	LC3-1 -X Dir.	Combination	2.277	-431.237	-3.179	-123.8686	-0.5393	-1159.1042
C8-C1	22.8028	LC3-2 -Y Dir.	Combination	2.277	-431.237	-3.179	-123.8686	-0.5393	-1159.1042
C2-C3	20.5225	LC4-1 -X Dir.	Combination	6.181E-16	-422.929	0.424	-120.7064	-1.7438	-1852.9816
C8-C1	20.5225	LC4-1 +X Dir.	Combination	1.116E-15	-422.073	0.504	192.8789	-2.0674	-1614.5941
C8-C1	21.6627	LC2-2 -Y Dir.	Combination	6.679E-16	-418.985	0.304	-301.3298	-1.5851	-1763.1466
C8-C1	21.6627	LC2-2 -Y Dir.	Combination	-3.469E-16	-418.985	0.304	-301.3298	-1.5851	-1763.1466
C2-C3	20.5225	LC2-2 -Y Dir.	Combination	7.243E-17	-418.595	0.048	787.2693	-0.2768	-2111.8012
C7-C8	22.5094	LC2-1 +X Dir.	Combination	0	-410.685	0.053	-440.0707	-0.2631	-1813.7066
C7-C8	22.5094	LC2-1 +X Dir.	Combination	0	-410.685	0.053	-440.0707	-0.2631	-1813.7066
C1-C2	23.8746	LC1	Combination	0	-410.589	0.099	263.5622	-0.5366	-1774.6838
C1-C2	23.8746	LC1	Combination	0	-410.589	0.099	263.5622	-0.5366	-1774.6838
C3-C4	22.5	LC4-1 -X Dir.	Combination	-2.091	-410.53	-7.261	489.9623	-2.568	-1058.7054

SAP Output-Cap Beam Analysis-Pinned Column Connection-20130214

8-5
Foundation Model
Using Solid Elements

License #20D19

SAP2000 Analysis Report

Prepared by
Moffatt & Nichol

Model Name: Fndn Model_all solids-7897-02-20130214-12in Piles-Pinned Column Connection.sdb

18 February 2013

Fndn Model_all solids-7897-02-20130214-12in Piles-Pinned Column Connection.sdb
SAP2000 v15.1.0 - License #20D19
18 February 2013

8-5-1 Model geometry

This section provides model geometry information, including items such as joint coordinates, joint restraints, and element connectivity.

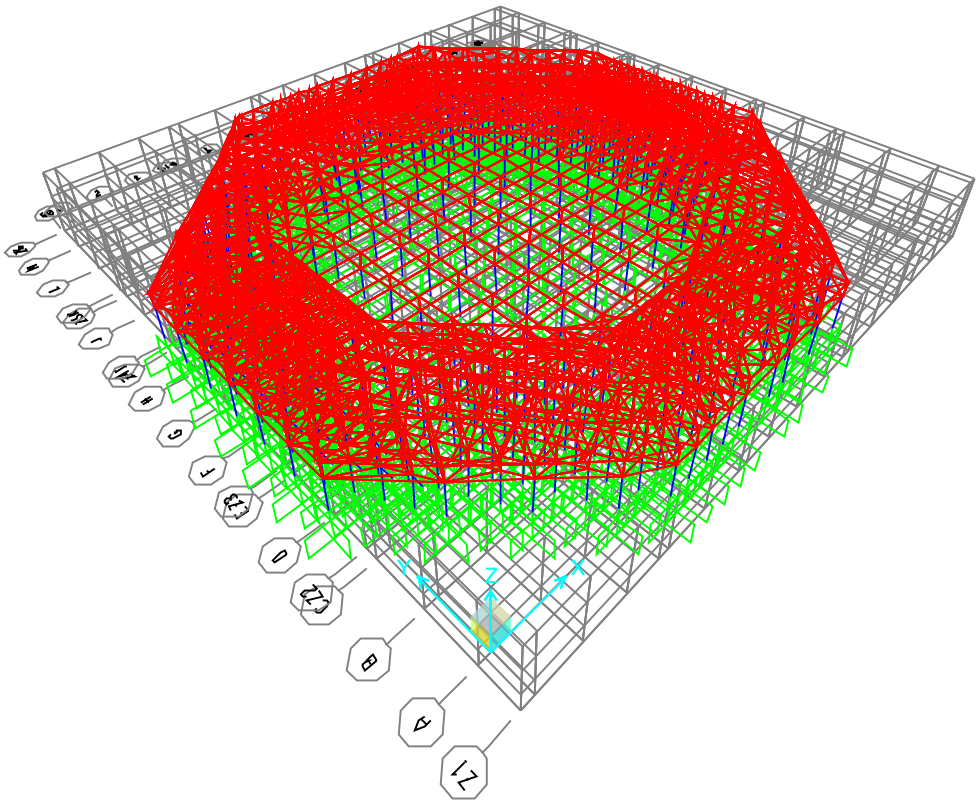

Figure 1: Finite element model

8-5-1-1 Joint coordinates

Table 1: Joint Coordinates

Table 1: Joint Coordinates

Joint	CoordSys	CoordType	GlobalX	GlobalY	GlobalZ
			ft	ft	ft
C1	GLOBAL	Cartesian	48.9110	6.2500	8.0000
C2	GLOBAL	Cartesian	23.3750	7.5000	8.0000
C3	GLOBAL	Cartesian	6.8750	22.5000	8.0000
C4	GLOBAL	Cartesian	6.8750	46.2500	8.0000
C5	GLOBAL	Cartesian	22.0000	63.7500	8.0000
C6	GLOBAL	Cartesian	49.5000	63.7500	8.0000
C7	GLOBAL	Cartesian	63.2500	47.5000	8.0000
C8	GLOBAL	Cartesian	64.6250	24.1490	8.0000
313	GLOBAL	Cartesian	45.5000	13.7500	0.0000
314	GLOBAL	Cartesian	45.5000	55.0000	0.0000
315	GLOBAL	Cartesian	26.0000	55.0000	0.0000
316	GLOBAL	Cartesian	68.7500	20.0000	0.0000
320	GLOBAL	Cartesian	68.7500	20.0000	-4.5000
321	GLOBAL	Cartesian	68.7500	25.0000	0.0000
322	GLOBAL	Cartesian	68.7500	25.0000	-4.5000
327	GLOBAL	Cartesian	68.7500	30.0000	0.0000
328	GLOBAL	Cartesian	68.7500	30.0000	-4.5000
332	GLOBAL	Cartesian	68.7500	40.0000	0.0000
334	GLOBAL	Cartesian	68.7500	40.0000	-4.5000
335	GLOBAL	Cartesian	68.7500	45.0000	0.0000
336	GLOBAL	Cartesian	68.7500	45.0000	-4.5000
340	GLOBAL	Cartesian	68.7500	50.0000	0.0000
342	GLOBAL	Cartesian	68.7500	50.0000	-4.5000
343	GLOBAL	Cartesian	52.2500	15.0000	0.0000
344	GLOBAL	Cartesian	52.2500	15.0000	-4.5000
345	GLOBAL	Cartesian	52.2500	20.0000	0.0000
398	GLOBAL	Cartesian	52.2500	20.0000	-4.5000
402	GLOBAL	Cartesian	52.2500	25.0000	0.0000
404	GLOBAL	Cartesian	52.2500	25.0000	-4.5000
406	GLOBAL	Cartesian	52.2500	30.0000	0.0000
407	GLOBAL	Cartesian	52.2500	30.0000	-4.5000
408	GLOBAL	Cartesian	52.2500	35.0000	0.0000
409	GLOBAL	Cartesian	52.2500	35.0000	-4.5000

Table 1: Joint Coordinates

Joint	CoordSys	CoordType	GlobalX	GlobalY	GlobalZ
			ft	ft	ft
410	GLOBAL	Cartesian	52.2500	40.0000	0.0000
412	GLOBAL	Cartesian	52.2500	40.0000	-4.5000
413	GLOBAL	Cartesian	52.2500	45.0000	0.0000
414	GLOBAL	Cartesian	52.2500	45.0000	-4.5000
415	GLOBAL	Cartesian	52.2500	50.0000	-4.5000
416	GLOBAL	Cartesian	52.2500	50.0000	0.0000
418	GLOBAL	Cartesian	52.2500	55.0000	0.0000
428	GLOBAL	Cartesian	52.2500	55.0000	-4.5000
429	GLOBAL	Cartesian	46.7500	15.0000	0.0000
440	GLOBAL	Cartesian	46.7500	15.0000	-4.5000
441	GLOBAL	Cartesian	46.7500	20.0000	0.0000
442	GLOBAL	Cartesian	46.7500	20.0000	-4.5000
443	GLOBAL	Cartesian	46.7500	25.0000	0.0000
452	GLOBAL	Cartesian	46.7500	25.0000	-4.5000
454	GLOBAL	Cartesian	46.7500	30.0000	0.0000
455	GLOBAL	Cartesian	46.7500	30.0000	-4.5000
456	GLOBAL	Cartesian	46.7500	35.0000	0.0000
457	GLOBAL	Cartesian	46.7500	35.0000	-4.5000
458	GLOBAL	Cartesian	46.7500	40.0000	0.0000
459	GLOBAL	Cartesian	46.7500	40.0000	-4.5000
461	GLOBAL	Cartesian	46.7500	45.0000	0.0000
462	GLOBAL	Cartesian	46.7500	45.0000	-4.5000
465	GLOBAL	Cartesian	46.7500	50.0000	-4.5000
475	GLOBAL	Cartesian	46.7500	50.0000	0.0000
508	GLOBAL	Cartesian	46.7500	55.0000	0.0000
509	GLOBAL	Cartesian	46.7500	55.0000	-4.5000
524	GLOBAL	Cartesian	41.2500	15.0000	0.0000
525	GLOBAL	Cartesian	41.2500	15.0000	-4.5000
535	GLOBAL	Cartesian	41.2500	20.0000	0.0000
536	GLOBAL	Cartesian	41.2500	20.0000	-4.5000
537	GLOBAL	Cartesian	41.2500	25.0000	0.0000
538	GLOBAL	Cartesian	41.2500	25.0000	-4.5000
539	GLOBAL	Cartesian	41.2500	30.0000	0.0000
548	GLOBAL	Cartesian	41.2500	30.0000	-4.5000
549	GLOBAL	Cartesian	41.2500	35.0000	0.0000
556	GLOBAL	Cartesian	41.2500	35.0000	-4.5000
557	GLOBAL	Cartesian	41.2500	40.0000	0.0000
558	GLOBAL	Cartesian	41.2500	40.0000	-4.5000

Table 1: Joint Coordinates

Joint	CoordSys	CoordType	GlobalX	GlobalY	GlobalZ
			ft	ft	ft
559	GLOBAL	Cartesian	41.2500	45.0000	0.0000
560	GLOBAL	Cartesian	41.2500	45.0000	-4.5000
561	GLOBAL	Cartesian	41.2500	50.0000	-4.5000
562	GLOBAL	Cartesian	41.2500	50.0000	0.0000
563	GLOBAL	Cartesian	41.2500	55.0000	0.0000
564	GLOBAL	Cartesian	41.2500	55.0000	-4.5000
565	GLOBAL	Cartesian	35.7500	20.0000	0.0000
570	GLOBAL	Cartesian	68.7500	27.5000	0.0000
572	GLOBAL	Cartesian	35.7500	20.0000	-4.5000
573	GLOBAL	Cartesian	35.7500	25.0000	0.0000
578	GLOBAL	Cartesian	35.7500	25.0000	-4.5000
579	GLOBAL	Cartesian	35.7500	30.0000	0.0000
580	GLOBAL	Cartesian	35.7500	30.0000	-4.5000
581	GLOBAL	Cartesian	35.7500	35.0000	0.0000
582	GLOBAL	Cartesian	35.7500	35.0000	-4.5000
583	GLOBAL	Cartesian	35.7500	40.0000	0.0000
584	GLOBAL	Cartesian	35.7500	40.0000	-4.5000
585	GLOBAL	Cartesian	35.7500	45.0000	0.0000
586	GLOBAL	Cartesian	35.7500	45.0000	-4.5000
587	GLOBAL	Cartesian	35.7500	50.0000	-4.5000
588	GLOBAL	Cartesian	35.7500	50.0000	0.0000
589	GLOBAL	Cartesian	30.2500	15.0000	0.0000
596	GLOBAL	Cartesian	30.2500	15.0000	-4.5000
597	GLOBAL	Cartesian	30.2500	20.0000	0.0000
606	GLOBAL	Cartesian	30.2500	20.0000	-4.5000
607	GLOBAL	Cartesian	30.2500	25.0000	0.0000
656	GLOBAL	Cartesian	30.2500	25.0000	-4.5000
657	GLOBAL	Cartesian	30.2500	30.0000	0.0000
658	GLOBAL	Cartesian	30.2500	30.0000	-4.5000
659	GLOBAL	Cartesian	30.2500	35.0000	0.0000
660	GLOBAL	Cartesian	30.2500	35.0000	-4.5000
661	GLOBAL	Cartesian	30.2500	40.0000	0.0000
662	GLOBAL	Cartesian	30.2500	40.0000	-4.5000
663	GLOBAL	Cartesian	30.2500	45.0000	0.0000
666	GLOBAL	Cartesian	30.2500	45.0000	-4.5000
667	GLOBAL	Cartesian	30.2500	50.0000	-4.5000
672	GLOBAL	Cartesian	30.2500	50.0000	0.0000
673	GLOBAL	Cartesian	30.2500	55.0000	0.0000

Table 1: Joint Coordinates

Joint	CoordSys	CoordType	GlobalX	GlobalY	GlobalZ
			ft	ft	ft
692	GLOBAL	Cartesian	30.2500	55.0000	-4.5000
693	GLOBAL	Cartesian	24.7500	15.0000	0.0000
694	GLOBAL	Cartesian	24.7500	15.0000	-4.5000
695	GLOBAL	Cartesian	24.7500	20.0000	0.0000
696	GLOBAL	Cartesian	24.7500	20.0000	-4.5000
697	GLOBAL	Cartesian	24.7500	25.0000	0.0000
698	GLOBAL	Cartesian	24.7500	25.0000	-4.5000
699	GLOBAL	Cartesian	24.7500	30.0000	0.0000
700	GLOBAL	Cartesian	24.7500	30.0000	-4.5000
701	GLOBAL	Cartesian	24.7500	35.0000	0.0000
703	GLOBAL	Cartesian	24.7500	35.0000	-4.5000
710	GLOBAL	Cartesian	24.7500	40.0000	0.0000
722	GLOBAL	Cartesian	24.7500	40.0000	-4.5000
723	GLOBAL	Cartesian	24.7500	45.0000	0.0000
728	GLOBAL	Cartesian	24.7500	45.0000	-4.5000
729	GLOBAL	Cartesian	24.7500	50.0000	-4.5000
732	GLOBAL	Cartesian	24.7500	50.0000	0.0000
733	GLOBAL	Cartesian	24.7500	55.0000	0.0000
734	GLOBAL	Cartesian	24.7500	55.0000	-4.5000
735	GLOBAL	Cartesian	19.2500	15.0000	0.0000
736	GLOBAL	Cartesian	19.2500	15.0000	-4.5000
737	GLOBAL	Cartesian	19.2500	20.0000	0.0000
739	GLOBAL	Cartesian	19.2500	20.0000	-4.5000
740	GLOBAL	Cartesian	19.2500	25.0000	0.0000
741	GLOBAL	Cartesian	19.2500	25.0000	-4.5000
742	GLOBAL	Cartesian	19.2500	30.0000	0.0000
744	GLOBAL	Cartesian	19.2500	30.0000	-4.5000
746	GLOBAL	Cartesian	19.2500	35.0000	0.0000
747	GLOBAL	Cartesian	19.2500	35.0000	-4.5000
756	GLOBAL	Cartesian	19.2500	40.0000	0.0000
757	GLOBAL	Cartesian	19.2500	40.0000	-4.5000
758	GLOBAL	Cartesian	19.2500	45.0000	0.0000
759	GLOBAL	Cartesian	19.2500	45.0000	-4.5000
760	GLOBAL	Cartesian	19.2500	50.0000	-4.5000
761	GLOBAL	Cartesian	19.2500	50.0000	0.0000
762	GLOBAL	Cartesian	19.2500	55.0000	0.0000
763	GLOBAL	Cartesian	19.2500	55.0000	-4.5000
772	GLOBAL	Cartesian	7.0000	43.7500	0.0000

Table 1: Joint Coordinates

Joint	CoordSys	CoordType	GlobalX	GlobalY	GlobalZ
			ft	ft	ft
773	GLOBAL	Cartesian	13.7500	15.0000	0.0000
774	GLOBAL	Cartesian	13.7500	15.0000	-4.5000
775	GLOBAL	Cartesian	13.7500	20.0000	0.0000
776	GLOBAL	Cartesian	13.7500	20.0000	-4.5000
777	GLOBAL	Cartesian	13.7500	25.0000	0.0000
778	GLOBAL	Cartesian	13.7500	25.0000	-4.5000
779	GLOBAL	Cartesian	13.7500	30.0000	0.0000
854	GLOBAL	Cartesian	13.7500	30.0000	-4.5000
855	GLOBAL	Cartesian	13.7500	35.0000	0.0000
858	GLOBAL	Cartesian	13.7500	35.0000	-4.5000
859	GLOBAL	Cartesian	13.7500	40.0000	0.0000
876	GLOBAL	Cartesian	13.7500	40.0000	-4.5000
877	GLOBAL	Cartesian	13.7500	45.0000	0.0000
878	GLOBAL	Cartesian	13.7500	45.0000	-4.5000
879	GLOBAL	Cartesian	13.7500	50.0000	-4.5000
880	GLOBAL	Cartesian	13.7500	50.0000	0.0000
881	GLOBAL	Cartesian	13.7500	55.0000	0.0000
882	GLOBAL	Cartesian	13.7500	55.0000	-4.5000
883	GLOBAL	Cartesian	1.5000	43.7500	0.0000
884	GLOBAL	Cartesian	8.2500	15.0000	0.0000
885	GLOBAL	Cartesian	8.2500	15.0000	-4.5000
886	GLOBAL	Cartesian	8.2500	20.0000	0.0000
887	GLOBAL	Cartesian	8.2500	20.0000	-4.5000
920	GLOBAL	Cartesian	8.2500	25.0000	0.0000
921	GLOBAL	Cartesian	8.2500	25.0000	-4.5000
962	GLOBAL	Cartesian	8.2500	30.0000	0.0000
963	GLOBAL	Cartesian	8.2500	30.0000	-4.5000
968	GLOBAL	Cartesian	8.2500	35.0000	0.0000
974	GLOBAL	Cartesian	8.2500	35.0000	-4.5000
980	GLOBAL	Cartesian	8.2500	40.0000	0.0000
981	GLOBAL	Cartesian	8.2500	40.0000	-4.5000
982	GLOBAL	Cartesian	8.2500	45.0000	0.0000
983	GLOBAL	Cartesian	8.2500	45.0000	-4.5000
995	GLOBAL	Cartesian	8.2500	50.0000	-4.5000
1000	GLOBAL	Cartesian	8.2500	50.0000	0.0000
1039	GLOBAL	Cartesian	8.2500	55.0000	0.0000
1054	GLOBAL	Cartesian	8.2500	55.0000	-4.5000
1068	GLOBAL	Cartesian	2.7500	20.0000	0.0000

Table 1: Joint Coordinates

Joint	CoordSys	CoordType	GlobalX	GlobalY	GlobalZ
			ft	ft	ft
1071	GLOBAL	Cartesian	2.7500	20.0000	-4.5000
1073	GLOBAL	Cartesian	2.7500	25.0000	0.0000
1074	GLOBAL	Cartesian	2.7500	25.0000	-4.5000
1075	GLOBAL	Cartesian	2.7500	30.0000	0.0000
1076	GLOBAL	Cartesian	2.7500	30.0000	-4.5000
1077	GLOBAL	Cartesian	2.7500	35.0000	0.0000
1078	GLOBAL	Cartesian	2.7500	35.0000	-4.5000
1079	GLOBAL	Cartesian	2.7500	40.0000	0.0000
1081	GLOBAL	Cartesian	2.7500	40.0000	-4.5000
1082	GLOBAL	Cartesian	2.7500	45.0000	0.0000
1083	GLOBAL	Cartesian	2.7500	45.0000	-4.5000
1084	GLOBAL	Cartesian	2.7500	50.0000	-4.5000
1087	GLOBAL	Cartesian	2.7500	50.0000	0.0000
1088	GLOBAL	Cartesian	63.2500	15.0000	0.0000
1089	GLOBAL	Cartesian	63.2500	15.0000	-4.5000
1090	GLOBAL	Cartesian	63.2500	20.0000	0.0000
1091	GLOBAL	Cartesian	63.2500	20.0000	-4.5000
1092	GLOBAL	Cartesian	63.2500	25.0000	0.0000
1095	GLOBAL	Cartesian	63.2500	25.0000	-4.5000
1096	GLOBAL	Cartesian	63.2500	30.0000	0.0000
1098	GLOBAL	Cartesian	63.2500	30.0000	-4.5000
1100	GLOBAL	Cartesian	63.2500	40.0000	0.0000
1101	GLOBAL	Cartesian	63.2500	40.0000	-4.5000
1102	GLOBAL	Cartesian	63.2500	45.0000	0.0000
1128	GLOBAL	Cartesian	63.2500	45.0000	-4.5000
1129	GLOBAL	Cartesian	63.2500	50.0000	0.0000
1130	GLOBAL	Cartesian	63.2500	50.0000	-4.5000
1131	GLOBAL	Cartesian	63.2500	55.0000	0.0000
1142	GLOBAL	Cartesian	63.2500	55.0000	-4.5000
1143	GLOBAL	Cartesian	57.7500	15.0000	0.0000
1144	GLOBAL	Cartesian	57.7500	15.0000	-4.5000
1145	GLOBAL	Cartesian	57.7500	20.0000	0.0000
1146	GLOBAL	Cartesian	57.7500	20.0000	-4.5000
1147	GLOBAL	Cartesian	57.7500	25.0000	0.0000
1148	GLOBAL	Cartesian	57.7500	25.0000	-4.5000
1149	GLOBAL	Cartesian	57.7500	30.0000	0.0000
1160	GLOBAL	Cartesian	57.7500	30.0000	-4.5000
1161	GLOBAL	Cartesian	57.7500	40.0000	0.0000

Table 1: Joint Coordinates

Joint	CoordSys	CoordType	GlobalX	GlobalY	GlobalZ
			ft	ft	ft
1162	GLOBAL	Cartesian	57.7500	40.0000	-4.5000
1163	GLOBAL	Cartesian	57.7500	45.0000	0.0000
1164	GLOBAL	Cartesian	57.7500	45.0000	-4.5000
1165	GLOBAL	Cartesian	57.7500	50.0000	0.0000
1166	GLOBAL	Cartesian	57.7500	50.0000	-4.5000
1167	GLOBAL	Cartesian	57.7500	55.0000	0.0000
1168	GLOBAL	Cartesian	57.7500	55.0000	-4.5000
1169	GLOBAL	Cartesian	52.2500	10.0000	0.0000
1170	GLOBAL	Cartesian	52.2500	10.0000	-4.5000
1171	GLOBAL	Cartesian	46.7500	10.0000	0.0000
1226	GLOBAL	Cartesian	46.7500	10.0000	-4.5000
1227	GLOBAL	Cartesian	41.2500	10.0000	0.0000
1230	GLOBAL	Cartesian	41.2500	10.0000	-4.5000
1231	GLOBAL	Cartesian	30.2500	10.0000	0.0000
1236	GLOBAL	Cartesian	30.2500	10.0000	-4.5000
1237	GLOBAL	Cartesian	24.7500	10.0000	0.0000
1240	GLOBAL	Cartesian	24.7500	10.0000	-4.5000
1241	GLOBAL	Cartesian	19.2500	10.0000	0.0000
1244	GLOBAL	Cartesian	19.2500	10.0000	-4.5000
1245	GLOBAL	Cartesian	13.7500	10.0000	0.0000
1248	GLOBAL	Cartesian	13.7500	10.0000	-4.5000
1249	GLOBAL	Cartesian	57.7500	10.0000	0.0000
1320	GLOBAL	Cartesian	57.7500	10.0000	-4.5000
1321	GLOBAL	Cartesian	52.2500	5.0000	0.0000
1322	GLOBAL	Cartesian	52.2500	5.0000	-4.5000
1323	GLOBAL	Cartesian	46.7500	5.0000	0.0000
1324	GLOBAL	Cartesian	46.7500	5.0000	-4.5000
1325	GLOBAL	Cartesian	41.2500	5.0000	0.0000
1326	GLOBAL	Cartesian	41.2500	5.0000	-4.5000
1327	GLOBAL	Cartesian	30.2500	5.0000	0.0000
1328	GLOBAL	Cartesian	30.2500	5.0000	-4.5000
1329	GLOBAL	Cartesian	24.7500	5.0000	0.0000
1330	GLOBAL	Cartesian	24.7500	5.0000	-4.5000
1331	GLOBAL	Cartesian	19.2500	5.0000	0.0000
1332	GLOBAL	Cartesian	19.2500	5.0000	-4.5000
1333	GLOBAL	Cartesian	52.2500	1.010E-15	0.0000
1334	GLOBAL	Cartesian	52.2500	1.010E-15	-4.5000
1335	GLOBAL	Cartesian	46.7500	1.347E-15	0.0000

Table 1: Joint Coordinates

Joint	CoordSys	CoordType	GlobalX	GlobalY	GlobalZ
			ft	ft	ft
1336	GLOBAL	Cartesian	46.7500	1.347E-15	-4.5000
1338	GLOBAL	Cartesian	41.2500	1.684E-15	0.0000
1339	GLOBAL	Cartesian	41.2500	1.684E-15	-4.5000
1340	GLOBAL	Cartesian	30.2500	2.357E-15	0.0000
1341	GLOBAL	Cartesian	30.2500	2.357E-15	-4.5000
1342	GLOBAL	Cartesian	24.7500	2.694E-15	0.0000
1343	GLOBAL	Cartesian	24.7500	2.694E-15	-4.5000
1345	GLOBAL	Cartesian	52.2500	60.0000	0.0000
1346	GLOBAL	Cartesian	52.2500	60.0000	-4.5000
1348	GLOBAL	Cartesian	46.7500	60.0000	0.0000
1350	GLOBAL	Cartesian	46.7500	60.0000	-4.5000
1351	GLOBAL	Cartesian	41.2500	60.0000	0.0000
1352	GLOBAL	Cartesian	41.2500	60.0000	-4.5000
1353	GLOBAL	Cartesian	30.2500	60.0000	0.0000
1357	GLOBAL	Cartesian	30.2500	60.0000	-4.5000
1358	GLOBAL	Cartesian	24.7500	60.0000	0.0000
1360	GLOBAL	Cartesian	24.7500	60.0000	-4.5000
1361	GLOBAL	Cartesian	19.2500	60.0000	0.0000
1363	GLOBAL	Cartesian	19.2500	60.0000	-4.5000
1364	GLOBAL	Cartesian	13.7500	60.0000	0.0000
1366	GLOBAL	Cartesian	13.7500	60.0000	-4.5000
1367	GLOBAL	Cartesian	57.7500	60.0000	0.0000
1369	GLOBAL	Cartesian	57.7500	60.0000	-4.5000
1370	GLOBAL	Cartesian	52.2500	65.0000	0.0000
1371	GLOBAL	Cartesian	52.2500	65.0000	-4.5000
1372	GLOBAL	Cartesian	46.7500	65.0000	0.0000
1373	GLOBAL	Cartesian	46.7500	65.0000	-4.5000
1374	GLOBAL	Cartesian	41.2500	65.0000	0.0000
1375	GLOBAL	Cartesian	41.2500	65.0000	-4.5000
1376	GLOBAL	Cartesian	30.2500	65.0000	0.0000
1377	GLOBAL	Cartesian	30.2500	65.0000	-4.5000
1378	GLOBAL	Cartesian	24.7500	65.0000	0.0000
1379	GLOBAL	Cartesian	24.7500	65.0000	-4.5000
1380	GLOBAL	Cartesian	19.2500	65.0000	0.0000
1381	GLOBAL	Cartesian	19.2500	65.0000	-4.5000
1382	GLOBAL	Cartesian	52.2500	70.0000	0.0000
1383	GLOBAL	Cartesian	52.2500	70.0000	-4.5000
1384	GLOBAL	Cartesian	46.7500	70.0000	0.0000

Table 1: Joint Coordinates

Joint	CoordSys	CoordType	GlobalX	GlobalY	GlobalZ
			ft	ft	ft
1385	GLOBAL	Cartesian	46.7500	70.0000	-4.5000
1386	GLOBAL	Cartesian	41.2500	70.0000	0.0000
1387	GLOBAL	Cartesian	41.2500	70.0000	-4.5000
1388	GLOBAL	Cartesian	30.2500	70.0000	0.0000
1389	GLOBAL	Cartesian	30.2500	70.0000	-4.5000
1390	GLOBAL	Cartesian	24.7500	70.0000	0.0000
1391	GLOBAL	Cartesian	24.7500	70.0000	-4.5000
1392	GLOBAL	Cartesian	35.7500	12.5000	0.0000
1393	GLOBAL	Cartesian	35.7500	12.5000	-4.5000
1394	GLOBAL	Cartesian	35.7500	7.5000	0.0000
1395	GLOBAL	Cartesian	35.7500	7.5000	-4.5000
1396	GLOBAL	Cartesian	35.7500	2.5000	0.0000
1397	GLOBAL	Cartesian	35.7500	2.5000	-4.5000
1398	GLOBAL	Cartesian	35.7500	57.5000	0.0000
1399	GLOBAL	Cartesian	35.7500	57.5000	-4.5000
1400	GLOBAL	Cartesian	35.7500	62.5000	0.0000
1402	GLOBAL	Cartesian	35.7500	62.5000	-4.5000
1403	GLOBAL	Cartesian	35.7500	67.5000	0.0000
1404	GLOBAL	Cartesian	35.7500	67.5000	-4.5000
1405	GLOBAL	Cartesian	68.7500	35.0000	0.0000
1406	GLOBAL	Cartesian	68.7500	35.0000	-4.5000
1407	GLOBAL	Cartesian	63.2500	35.0000	0.0000
1408	GLOBAL	Cartesian	63.2500	35.0000	-4.5000
1410	GLOBAL	Cartesian	57.7500	35.0000	0.0000
1411	GLOBAL	Cartesian	57.7500	35.0000	-4.5000
1412	GLOBAL	Cartesian	71.5000	21.2500	0.0000
1413	GLOBAL	Cartesian	71.5000	21.2500	-4.5000
1414	GLOBAL	Cartesian	71.5000	23.7500	0.0000
1415	GLOBAL	Cartesian	71.5000	23.7500	-4.5000
1417	GLOBAL	Cartesian	71.5000	26.2500	0.0000
1418	GLOBAL	Cartesian	71.5000	26.2500	-4.5000
1419	GLOBAL	Cartesian	71.5000	28.7500	0.0000
1420	GLOBAL	Cartesian	71.5000	28.7500	-4.5000
1421	GLOBAL	Cartesian	71.5000	31.2500	0.0000
1422	GLOBAL	Cartesian	71.5000	31.2500	-4.5000
1423	GLOBAL	Cartesian	71.5000	33.7500	0.0000
1424	GLOBAL	Cartesian	71.5000	33.7500	-4.5000
1425	GLOBAL	Cartesian	71.5000	36.2500	0.0000

Table 1: Joint Coordinates

Joint	CoordSys	CoordType	GlobalX	GlobalY	GlobalZ
			ft	ft	ft
1426	GLOBAL	Cartesian	71.5000	36.2500	-4.5000
1427	GLOBAL	Cartesian	71.5000	38.7500	0.0000
1428	GLOBAL	Cartesian	71.5000	38.7500	-4.5000
1429	GLOBAL	Cartesian	71.5000	41.2500	0.0000
1430	GLOBAL	Cartesian	71.5000	41.2500	-4.5000
1431	GLOBAL	Cartesian	71.5000	43.7500	0.0000
1432	GLOBAL	Cartesian	71.5000	43.7500	-4.5000
1433	GLOBAL	Cartesian	71.5000	46.2500	0.0000
1434	GLOBAL	Cartesian	71.5000	46.2500	-4.5000
1435	GLOBAL	Cartesian	71.5000	48.7500	0.0000
1436	GLOBAL	Cartesian	71.5000	48.7500	-4.5000
1437	GLOBAL	Cartesian	66.0000	21.2500	-4.5000
1438	GLOBAL	Cartesian	66.0000	23.7500	-4.5000
1439	GLOBAL	Cartesian	66.0000	26.2500	-4.5000
1440	GLOBAL	Cartesian	66.0000	28.7500	-4.5000
1442	GLOBAL	Cartesian	66.0000	31.2500	-4.5000
1443	GLOBAL	Cartesian	66.0000	33.7500	-4.5000
1457	GLOBAL	Cartesian	66.0000	36.2500	-4.5000
1462	GLOBAL	Cartesian	66.0000	38.7500	-4.5000
1561	GLOBAL	Cartesian	68.7500	41.2500	2.0000
1577	GLOBAL	Cartesian	68.7500	27.5000	2.0000
1656	GLOBAL	Cartesian	66.0000	41.2500	-4.5000
1657	GLOBAL	Cartesian	66.0000	43.7500	-4.5000
1658	GLOBAL	Cartesian	66.0000	46.2500	-4.5000
1660	GLOBAL	Cartesian	66.0000	48.7500	-4.5000
1661	GLOBAL	Cartesian	66.0000	21.2500	0.0000
1663	GLOBAL	Cartesian	66.0000	23.7500	0.0000
1664	GLOBAL	Cartesian	66.0000	26.2500	0.0000
1667	GLOBAL	Cartesian	66.0000	28.7500	0.0000
1670	GLOBAL	Cartesian	66.0000	31.2500	0.0000
1671	GLOBAL	Cartesian	66.0000	33.7500	0.0000
1672	GLOBAL	Cartesian	66.0000	36.2500	0.0000
1673	GLOBAL	Cartesian	66.0000	38.7500	0.0000
1676	GLOBAL	Cartesian	66.0000	41.2500	0.0000
1677	GLOBAL	Cartesian	66.0000	43.7500	0.0000
1678	GLOBAL	Cartesian	66.0000	46.2500	0.0000
1681	GLOBAL	Cartesian	66.0000	48.7500	0.0000
1682	GLOBAL	Cartesian	60.5000	21.2500	-4.5000

Table 1: Joint Coordinates

Joint	CoordSys	CoordType	GlobalX	GlobalY	GlobalZ
			ft	ft	ft
1683	GLOBAL	Cartesian	60.5000	23.7500	-4.5000
1684	GLOBAL	Cartesian	60.5000	26.2500	-4.5000
1685	GLOBAL	Cartesian	60.5000	28.7500	-4.5000
1686	GLOBAL	Cartesian	60.5000	31.2500	-4.5000
1687	GLOBAL	Cartesian	60.5000	33.7500	-4.5000
1688	GLOBAL	Cartesian	60.5000	36.2500	-4.5000
1689	GLOBAL	Cartesian	60.5000	38.7500	-4.5000
1690	GLOBAL	Cartesian	60.5000	41.2500	-4.5000
1691	GLOBAL	Cartesian	60.5000	43.7500	-4.5000
1692	GLOBAL	Cartesian	60.5000	46.2500	-4.5000
1693	GLOBAL	Cartesian	60.5000	48.7500	-4.5000
1696	GLOBAL	Cartesian	60.5000	21.2500	0.0000
1697	GLOBAL	Cartesian	60.5000	23.7500	0.0000
1701	GLOBAL	Cartesian	60.5000	26.2500	0.0000
1703	GLOBAL	Cartesian	60.5000	28.7500	0.0000
1704	GLOBAL	Cartesian	60.5000	31.2500	0.0000
1705	GLOBAL	Cartesian	60.5000	33.7500	0.0000
1711	GLOBAL	Cartesian	60.5000	36.2500	0.0000
1713	GLOBAL	Cartesian	60.5000	38.7500	0.0000
1714	GLOBAL	Cartesian	60.5000	41.2500	0.0000
1721	GLOBAL	Cartesian	60.5000	43.7500	0.0000
1722	GLOBAL	Cartesian	60.5000	46.2500	0.0000
1723	GLOBAL	Cartesian	60.5000	48.7500	0.0000
1724	GLOBAL	Cartesian	60.5000	16.2500	0.0000
1725	GLOBAL	Cartesian	60.5000	16.2500	-4.5000
1755	GLOBAL	Cartesian	60.5000	18.7500	0.0000
1757	GLOBAL	Cartesian	60.5000	18.7500	-4.5000
1762	GLOBAL	Cartesian	60.5000	11.2500	0.0000
1764	GLOBAL	Cartesian	60.5000	11.2500	-4.5000
1766	GLOBAL	Cartesian	60.5000	13.7500	0.0000
2031	GLOBAL	Cartesian	60.5000	13.7500	-4.5000
2181	GLOBAL	Cartesian	60.5000	8.7500	0.0000
2182	GLOBAL	Cartesian	60.5000	8.7500	-4.5000
2183	GLOBAL	Cartesian	60.5000	51.2500	0.0000
2184	GLOBAL	Cartesian	60.5000	51.2500	-4.5000
2185	GLOBAL	Cartesian	60.5000	53.7500	0.0000
2186	GLOBAL	Cartesian	60.5000	53.7500	-4.5000
2187	GLOBAL	Cartesian	60.5000	56.2500	0.0000

Table 1: Joint Coordinates

Joint	CoordSys	CoordType	GlobalX	GlobalY	GlobalZ
			ft	ft	ft
2188	GLOBAL	Cartesian	60.5000	56.2500	-4.5000
2189	GLOBAL	Cartesian	60.5000	58.7500	0.0000
2190	GLOBAL	Cartesian	60.5000	58.7500	-4.5000
2191	GLOBAL	Cartesian	66.0000	16.2500	0.0000
2192	GLOBAL	Cartesian	66.0000	16.2500	-4.5000
2193	GLOBAL	Cartesian	66.0000	18.7500	0.0000
2194	GLOBAL	Cartesian	66.0000	18.7500	-4.5000
2195	GLOBAL	Cartesian	66.0000	51.2500	0.0000
2196	GLOBAL	Cartesian	66.0000	51.2500	-4.5000
2197	GLOBAL	Cartesian	66.0000	53.7500	0.0000
2198	GLOBAL	Cartesian	66.0000	53.7500	-4.5000
2199	GLOBAL	Cartesian	55.0000	21.2500	0.0000
2200	GLOBAL	Cartesian	55.0000	21.2500	-4.5000
2201	GLOBAL	Cartesian	55.0000	23.7500	0.0000
2202	GLOBAL	Cartesian	55.0000	23.7500	-4.5000
2203	GLOBAL	Cartesian	55.0000	46.2500	0.0000
2204	GLOBAL	Cartesian	55.0000	46.2500	-4.5000
2205	GLOBAL	Cartesian	55.0000	48.7500	0.0000
2206	GLOBAL	Cartesian	55.0000	48.7500	-4.5000
2207	GLOBAL	Cartesian	55.0000	16.2500	0.0000
2208	GLOBAL	Cartesian	55.0000	16.2500	-4.5000
2209	GLOBAL	Cartesian	55.0000	18.7500	0.0000
2210	GLOBAL	Cartesian	55.0000	18.7500	-4.5000
2211	GLOBAL	Cartesian	55.0000	11.2500	0.0000
2212	GLOBAL	Cartesian	55.0000	11.2500	-4.5000
2213	GLOBAL	Cartesian	55.0000	13.7500	0.0000
2214	GLOBAL	Cartesian	55.0000	13.7500	-4.5000
2215	GLOBAL	Cartesian	55.0000	51.2500	0.0000
2216	GLOBAL	Cartesian	55.0000	51.2500	-4.5000
2217	GLOBAL	Cartesian	55.0000	53.7500	0.0000
2220	GLOBAL	Cartesian	55.0000	53.7500	-4.5000
2222	GLOBAL	Cartesian	55.0000	56.2500	0.0000
2224	GLOBAL	Cartesian	55.0000	56.2500	-4.5000
2226	GLOBAL	Cartesian	55.0000	58.7500	0.0000
2228	GLOBAL	Cartesian	55.0000	58.7500	-4.5000
2230	GLOBAL	Cartesian	49.5000	16.2500	0.0000
2232	GLOBAL	Cartesian	49.5000	16.2500	-4.5000
2234	GLOBAL	Cartesian	49.5000	11.2500	0.0000

Table 1: Joint Coordinates

Joint	CoordSys	CoordType	GlobalX	GlobalY	GlobalZ
			ft	ft	ft
2236	GLOBAL	Cartesian	49.5000	11.2500	-4.5000
2238	GLOBAL	Cartesian	49.5000	13.7500	0.0000
2240	GLOBAL	Cartesian	49.5000	13.7500	-4.5000
2242	GLOBAL	Cartesian	49.5000	53.7500	0.0000
2246	GLOBAL	Cartesian	49.5000	53.7500	-4.5000
2247	GLOBAL	Cartesian	49.5000	56.2500	0.0000
2248	GLOBAL	Cartesian	49.5000	56.2500	-4.5000
2249	GLOBAL	Cartesian	49.5000	58.7500	0.0000
2250	GLOBAL	Cartesian	49.5000	58.7500	-4.5000
2251	GLOBAL	Cartesian	44.0000	11.2500	0.0000
2252	GLOBAL	Cartesian	44.0000	11.2500	-4.5000
2253	GLOBAL	Cartesian	44.0000	13.7500	0.0000
2254	GLOBAL	Cartesian	44.0000	13.7500	-4.5000
2255	GLOBAL	Cartesian	44.0000	56.2500	0.0000
2256	GLOBAL	Cartesian	44.0000	56.2500	-4.5000
2257	GLOBAL	Cartesian	44.0000	58.7500	0.0000
2258	GLOBAL	Cartesian	44.0000	58.7500	-4.5000
2259	GLOBAL	Cartesian	55.0000	61.7500	0.0000
2260	GLOBAL	Cartesian	55.0000	61.7500	-4.5000
2274	GLOBAL	Cartesian	55.0000	64.2500	0.0000
2276	GLOBAL	Cartesian	55.0000	64.2500	-4.5000
2277	GLOBAL	Cartesian	55.0000	67.2500	0.0000
2278	GLOBAL	Cartesian	55.0000	67.2500	-4.5000
2279	GLOBAL	Cartesian	55.0000	5.7500	0.0000
2280	GLOBAL	Cartesian	55.0000	5.7500	-4.5000
2281	GLOBAL	Cartesian	55.0000	8.2500	0.0000
2282	GLOBAL	Cartesian	55.0000	8.2500	-4.5000
2283	GLOBAL	Cartesian	55.0000	2.7500	0.0000
2284	GLOBAL	Cartesian	55.0000	2.7500	-4.5000
2285	GLOBAL	Cartesian	49.5000	6.2500	0.0000
2286	GLOBAL	Cartesian	49.5000	6.2500	-4.5000
2287	GLOBAL	Cartesian	49.5000	8.7500	0.0000
2288	GLOBAL	Cartesian	49.5000	8.7500	-4.5000
2289	GLOBAL	Cartesian	49.5000	1.2500	0.0000
2290	GLOBAL	Cartesian	49.5000	1.2500	-4.5000
2305	GLOBAL	Cartesian	49.5000	3.7500	0.0000
2306	GLOBAL	Cartesian	49.5000	3.7500	-4.5000
2307	GLOBAL	Cartesian	49.5000	61.2500	0.0000

Table 1: Joint Coordinates

Joint	CoordSys	CoordType	GlobalX	GlobalY	GlobalZ
			ft	ft	ft
2308	GLOBAL	Cartesian	49.5000	61.2500	-4.5000
2309	GLOBAL	Cartesian	49.5000	63.7500	0.0000
2310	GLOBAL	Cartesian	49.5000	63.7500	-4.5000
2311	GLOBAL	Cartesian	49.5000	66.2500	0.0000
2312	GLOBAL	Cartesian	49.5000	66.2500	-4.5000
2313	GLOBAL	Cartesian	49.5000	68.7500	0.0000
2314	GLOBAL	Cartesian	49.5000	68.7500	-4.5000
2315	GLOBAL	Cartesian	44.0000	6.2500	0.0000
2316	GLOBAL	Cartesian	44.0000	6.2500	-4.5000
2317	GLOBAL	Cartesian	44.0000	8.7500	0.0000
2318	GLOBAL	Cartesian	44.0000	8.7500	-4.5000
2319	GLOBAL	Cartesian	44.0000	1.2500	0.0000
2320	GLOBAL	Cartesian	44.0000	1.2500	-4.5000
2321	GLOBAL	Cartesian	44.0000	3.7500	0.0000
2322	GLOBAL	Cartesian	44.0000	3.7500	-4.5000
2323	GLOBAL	Cartesian	44.0000	61.2500	0.0000
2324	GLOBAL	Cartesian	44.0000	61.2500	-4.5000
2325	GLOBAL	Cartesian	44.0000	63.7500	0.0000
2326	GLOBAL	Cartesian	44.0000	63.7500	-4.5000
2327	GLOBAL	Cartesian	44.0000	66.2500	0.0000
2328	GLOBAL	Cartesian	44.0000	66.2500	-4.5000
2330	GLOBAL	Cartesian	44.0000	68.7500	0.0000
2332	GLOBAL	Cartesian	44.0000	68.7500	-4.5000
2333	GLOBAL	Cartesian	68.7500	17.5000	0.0000
2334	GLOBAL	Cartesian	68.7500	17.5000	-4.5000
2335	GLOBAL	Cartesian	68.7500	22.5000	0.0000
2336	GLOBAL	Cartesian	68.7500	22.5000	-4.5000
2337	GLOBAL	Cartesian	68.7500	32.5000	0.0000
2338	GLOBAL	Cartesian	68.7500	32.5000	-4.5000
2339	GLOBAL	Cartesian	68.7500	37.5000	0.0000
2340	GLOBAL	Cartesian	68.7500	37.5000	-4.5000
2341	GLOBAL	Cartesian	68.7500	42.5000	0.0000
2348	GLOBAL	Cartesian	68.7500	42.5000	-4.5000
2358	GLOBAL	Cartesian	68.7500	47.5000	0.0000
2359	GLOBAL	Cartesian	68.7500	47.5000	-4.5000
2360	GLOBAL	Cartesian	68.7500	52.5000	0.0000
2361	GLOBAL	Cartesian	68.7500	52.5000	-4.5000
2362	GLOBAL	Cartesian	63.2500	17.5000	0.0000

Table 1: Joint Coordinates

Joint	CoordSys	CoordType	GlobalX	GlobalY	GlobalZ
			ft	ft	ft
2363	GLOBAL	Cartesian	63.2500	17.5000	-4.5000
2365	GLOBAL	Cartesian	63.2500	22.5000	0.0000
2367	GLOBAL	Cartesian	63.2500	22.5000	-4.5000
2369	GLOBAL	Cartesian	63.2500	27.5000	0.0000
2371	GLOBAL	Cartesian	63.2500	27.5000	-4.5000
2373	GLOBAL	Cartesian	63.2500	32.5000	0.0000
2378	GLOBAL	Cartesian	63.2500	32.5000	-4.5000
2379	GLOBAL	Cartesian	63.2500	37.5000	0.0000
2380	GLOBAL	Cartesian	63.2500	37.5000	-4.5000
2382	GLOBAL	Cartesian	63.2500	42.5000	0.0000
2383	GLOBAL	Cartesian	63.2500	42.5000	-4.5000
2384	GLOBAL	Cartesian	63.2500	47.5000	0.0000
2385	GLOBAL	Cartesian	63.2500	47.5000	-4.5000
2389	GLOBAL	Cartesian	63.2500	52.5000	0.0000
2392	GLOBAL	Cartesian	63.2500	52.5000	-4.5000
2393	GLOBAL	Cartesian	63.2500	12.5000	0.0000
2396	GLOBAL	Cartesian	63.2500	12.5000	-4.5000
2397	GLOBAL	Cartesian	63.2500	57.5000	0.0000
2399	GLOBAL	Cartesian	63.2500	57.5000	-4.5000
2402	GLOBAL	Cartesian	57.7500	17.5000	0.0000
2403	GLOBAL	Cartesian	57.7500	17.5000	-4.5000
2405	GLOBAL	Cartesian	57.7500	22.5000	0.0000
2408	GLOBAL	Cartesian	57.7500	22.5000	-4.5000
2409	GLOBAL	Cartesian	57.7500	27.5000	0.0000
2411	GLOBAL	Cartesian	57.7500	27.5000	-4.5000
2414	GLOBAL	Cartesian	57.7500	32.5000	0.0000
2415	GLOBAL	Cartesian	57.7500	32.5000	-4.5000
2417	GLOBAL	Cartesian	57.7500	37.5000	0.0000
2421	GLOBAL	Cartesian	57.7500	37.5000	-4.5000
2422	GLOBAL	Cartesian	57.7500	42.5000	0.0000
2425	GLOBAL	Cartesian	57.7500	42.5000	-4.5000
2426	GLOBAL	Cartesian	57.7500	47.5000	0.0000
2428	GLOBAL	Cartesian	57.7500	47.5000	-4.5000
2456	GLOBAL	Cartesian	57.7500	52.5000	0.0000
2464	GLOBAL	Cartesian	57.7500	52.5000	-4.5000
2466	GLOBAL	Cartesian	57.7500	12.5000	0.0000
2469	GLOBAL	Cartesian	57.7500	12.5000	-4.5000
2471	GLOBAL	Cartesian	57.7500	57.5000	0.0000

Table 1: Joint Coordinates

Joint	CoordSys	CoordType	GlobalX	GlobalY	GlobalZ
			ft	ft	ft
2486	GLOBAL	Cartesian	57.7500	57.5000	-4.5000
2525	GLOBAL	Cartesian	57.7500	7.5000	0.0000
2533	GLOBAL	Cartesian	57.7500	7.5000	-4.5000
2535	GLOBAL	Cartesian	57.7500	62.5000	0.0000
2540	GLOBAL	Cartesian	57.7500	62.5000	-4.5000
2542	GLOBAL	Cartesian	52.2500	17.5000	0.0000
2547	GLOBAL	Cartesian	52.2500	17.5000	-4.5000
2568	GLOBAL	Cartesian	52.2500	52.5000	0.0000
2588	GLOBAL	Cartesian	52.2500	52.5000	-4.5000
2589	GLOBAL	Cartesian	52.2500	12.5000	0.0000
2590	GLOBAL	Cartesian	52.2500	12.5000	-4.5000
2591	GLOBAL	Cartesian	52.2500	57.5000	0.0000
2592	GLOBAL	Cartesian	52.2500	57.5000	-4.5000
2593	GLOBAL	Cartesian	52.2500	7.5000	0.0000
2594	GLOBAL	Cartesian	52.2500	7.5000	-4.5000
2595	GLOBAL	Cartesian	52.2500	62.5000	0.0000
2596	GLOBAL	Cartesian	52.2500	62.5000	-4.5000
2597	GLOBAL	Cartesian	52.2500	2.5000	0.0000
2598	GLOBAL	Cartesian	52.2500	2.5000	-4.5000
2599	GLOBAL	Cartesian	52.2500	67.5000	0.0000
2600	GLOBAL	Cartesian	52.2500	67.5000	-4.5000
2601	GLOBAL	Cartesian	46.7500	12.5000	0.0000
2602	GLOBAL	Cartesian	46.7500	12.5000	-4.5000
2603	GLOBAL	Cartesian	46.7500	57.5000	0.0000
2604	GLOBAL	Cartesian	46.7500	57.5000	-4.5000
2605	GLOBAL	Cartesian	46.7500	7.5000	0.0000
2606	GLOBAL	Cartesian	46.7500	7.5000	-4.5000
2607	GLOBAL	Cartesian	46.7500	62.5000	0.0000
2608	GLOBAL	Cartesian	46.7500	62.5000	-4.5000
2609	GLOBAL	Cartesian	46.7500	2.5000	0.0000
2610	GLOBAL	Cartesian	46.7500	2.5000	-4.5000
2611	GLOBAL	Cartesian	46.7500	67.5000	0.0000
2612	GLOBAL	Cartesian	46.7500	67.5000	-4.5000
2613	GLOBAL	Cartesian	41.2500	12.5000	0.0000
2614	GLOBAL	Cartesian	41.2500	12.5000	-4.5000
2615	GLOBAL	Cartesian	41.2500	57.5000	0.0000
2616	GLOBAL	Cartesian	41.2500	57.5000	-4.5000
2617	GLOBAL	Cartesian	41.2500	7.5000	0.0000

Table 1: Joint Coordinates

Joint	CoordSys	CoordType	GlobalX	GlobalY	GlobalZ
			ft	ft	ft
2618	GLOBAL	Cartesian	41.2500	7.5000	-4.5000
2619	GLOBAL	Cartesian	41.2500	62.5000	0.0000
2620	GLOBAL	Cartesian	41.2500	62.5000	-4.5000
2621	GLOBAL	Cartesian	41.2500	2.5000	0.0000
2622	GLOBAL	Cartesian	41.2500	2.5000	-4.5000
2623	GLOBAL	Cartesian	41.2500	67.5000	0.0000
2624	GLOBAL	Cartesian	41.2500	67.5000	-4.5000
2625	GLOBAL	Cartesian	38.5000	1.852E-15	0.0000
2626	GLOBAL	Cartesian	38.5000	1.852E-15	-4.5000
2627	GLOBAL	Cartesian	38.5000	5.0000	0.0000
2628	GLOBAL	Cartesian	38.5000	5.0000	-4.5000
2629	GLOBAL	Cartesian	38.5000	10.0000	0.0000
2630	GLOBAL	Cartesian	38.5000	10.0000	-4.5000
2631	GLOBAL	Cartesian	38.5000	70.0000	0.0000
2632	GLOBAL	Cartesian	38.5000	70.0000	-4.5000
2633	GLOBAL	Cartesian	38.5000	65.0000	0.0000
2634	GLOBAL	Cartesian	38.5000	65.0000	-4.5000
2635	GLOBAL	Cartesian	38.5000	60.0000	0.0000
2636	GLOBAL	Cartesian	38.5000	60.0000	-4.5000
2637	GLOBAL	Cartesian	33.0000	2.189E-15	0.0000
2638	GLOBAL	Cartesian	33.0000	2.189E-15	-4.5000
2639	GLOBAL	Cartesian	33.0000	5.0000	0.0000
2640	GLOBAL	Cartesian	33.0000	5.0000	-4.5000
2641	GLOBAL	Cartesian	33.0000	10.0000	0.0000
2642	GLOBAL	Cartesian	33.0000	10.0000	-4.5000
2643	GLOBAL	Cartesian	33.0000	70.0000	0.0000
2644	GLOBAL	Cartesian	33.0000	70.0000	-4.5000
2645	GLOBAL	Cartesian	33.0000	65.0000	0.0000
2646	GLOBAL	Cartesian	33.0000	65.0000	-4.5000
2647	GLOBAL	Cartesian	33.0000	60.0000	0.0000
2648	GLOBAL	Cartesian	33.0000	60.0000	-4.5000
2649	GLOBAL	Cartesian	27.5000	2.526E-15	0.0000
2650	GLOBAL	Cartesian	27.5000	2.526E-15	-4.5000
2651	GLOBAL	Cartesian	27.5000	5.0000	0.0000
2652	GLOBAL	Cartesian	27.5000	5.0000	-4.5000
2653	GLOBAL	Cartesian	27.5000	10.0000	0.0000
2654	GLOBAL	Cartesian	27.5000	10.0000	-4.5000
2655	GLOBAL	Cartesian	27.5000	70.0000	0.0000

Table 1: Joint Coordinates

Joint	CoordSys	CoordType	GlobalX	GlobalY	GlobalZ
			ft	ft	ft
2656	GLOBAL	Cartesian	27.5000	70.0000	-4.5000
2657	GLOBAL	Cartesian	27.5000	65.0000	0.0000
2658	GLOBAL	Cartesian	27.5000	65.0000	-4.5000
2659	GLOBAL	Cartesian	27.5000	60.0000	0.0000
2660	GLOBAL	Cartesian	27.5000	60.0000	-4.5000
2661	GLOBAL	Cartesian	22.0000	2.863E-15	0.0000
2662	GLOBAL	Cartesian	22.0000	2.863E-15	-4.5000
2663	GLOBAL	Cartesian	22.0000	5.0000	0.0000
2664	GLOBAL	Cartesian	22.0000	5.0000	-4.5000
2665	GLOBAL	Cartesian	22.0000	10.0000	0.0000
2666	GLOBAL	Cartesian	22.0000	10.0000	-4.5000
2667	GLOBAL	Cartesian	22.0000	70.0000	0.0000
2668	GLOBAL	Cartesian	22.0000	70.0000	-4.5000
2669	GLOBAL	Cartesian	22.0000	65.0000	0.0000
2670	GLOBAL	Cartesian	22.0000	65.0000	-4.5000
2671	GLOBAL	Cartesian	22.0000	60.0000	0.0000
2672	GLOBAL	Cartesian	22.0000	60.0000	-4.5000
2673	GLOBAL	Cartesian	16.5000	5.0000	0.0000
2674	GLOBAL	Cartesian	16.5000	5.0000	-4.5000
2675	GLOBAL	Cartesian	16.5000	10.0000	0.0000
2676	GLOBAL	Cartesian	16.5000	10.0000	-4.5000
2677	GLOBAL	Cartesian	16.5000	65.0000	0.0000
2678	GLOBAL	Cartesian	16.5000	65.0000	-4.5000
2679	GLOBAL	Cartesian	16.5000	60.0000	0.0000
2680	GLOBAL	Cartesian	16.5000	60.0000	-4.5000
2681	GLOBAL	Cartesian	11.0000	10.0000	0.0000
2682	GLOBAL	Cartesian	11.0000	10.0000	-4.5000
2683	GLOBAL	Cartesian	11.0000	60.0000	0.0000
2684	GLOBAL	Cartesian	11.0000	60.0000	-4.5000
2685	GLOBAL	Cartesian	22.0000	15.0000	0.0000
2686	GLOBAL	Cartesian	22.0000	15.0000	-4.5000
2687	GLOBAL	Cartesian	22.0000	55.0000	0.0000
2688	GLOBAL	Cartesian	22.0000	55.0000	-4.5000
2689	GLOBAL	Cartesian	16.5000	15.0000	0.0000
2690	GLOBAL	Cartesian	16.5000	15.0000	-4.5000
2691	GLOBAL	Cartesian	16.5000	20.0000	0.0000
2692	GLOBAL	Cartesian	16.5000	20.0000	-4.5000
2693	GLOBAL	Cartesian	16.5000	55.0000	0.0000

Table 1: Joint Coordinates

Joint	CoordSys	CoordType	GlobalX	GlobalY	GlobalZ
			ft	ft	ft
2694	GLOBAL	Cartesian	16.5000	55.0000	-4.5000
2695	GLOBAL	Cartesian	16.5000	50.0000	0.0000
2696	GLOBAL	Cartesian	16.5000	50.0000	-4.5000
2697	GLOBAL	Cartesian	11.0000	15.0000	0.0000
2698	GLOBAL	Cartesian	11.0000	15.0000	-4.5000
2699	GLOBAL	Cartesian	11.0000	20.0000	0.0000
2700	GLOBAL	Cartesian	11.0000	20.0000	-4.5000
2701	GLOBAL	Cartesian	11.0000	25.0000	0.0000
2702	GLOBAL	Cartesian	11.0000	25.0000	-4.5000
2703	GLOBAL	Cartesian	11.0000	30.0000	0.0000
2704	GLOBAL	Cartesian	11.0000	30.0000	-4.5000
2705	GLOBAL	Cartesian	11.0000	35.0000	0.0000
2706	GLOBAL	Cartesian	11.0000	35.0000	-4.5000
2707	GLOBAL	Cartesian	11.0000	40.0000	0.0000
2708	GLOBAL	Cartesian	11.0000	40.0000	-4.5000
2709	GLOBAL	Cartesian	11.0000	45.0000	0.0000
2710	GLOBAL	Cartesian	11.0000	45.0000	-4.5000
2711	GLOBAL	Cartesian	11.0000	50.0000	0.0000
2712	GLOBAL	Cartesian	11.0000	50.0000	-4.5000
2713	GLOBAL	Cartesian	11.0000	55.0000	0.0000
2714	GLOBAL	Cartesian	11.0000	55.0000	-4.5000
2715	GLOBAL	Cartesian	5.5000	15.0000	0.0000
2716	GLOBAL	Cartesian	5.5000	15.0000	-4.5000
2717	GLOBAL	Cartesian	5.5000	20.0000	0.0000
2718	GLOBAL	Cartesian	5.5000	20.0000	-4.5000
2719	GLOBAL	Cartesian	5.5000	25.0000	0.0000
2720	GLOBAL	Cartesian	5.5000	25.0000	-4.5000
2721	GLOBAL	Cartesian	5.5000	30.0000	0.0000
2722	GLOBAL	Cartesian	5.5000	30.0000	-4.5000
2723	GLOBAL	Cartesian	5.5000	35.0000	0.0000
2724	GLOBAL	Cartesian	5.5000	35.0000	-4.5000
2725	GLOBAL	Cartesian	5.5000	40.0000	0.0000
2726	GLOBAL	Cartesian	5.5000	40.0000	-4.5000
2727	GLOBAL	Cartesian	5.5000	45.0000	0.0000
2728	GLOBAL	Cartesian	5.5000	45.0000	-4.5000
2729	GLOBAL	Cartesian	5.5000	50.0000	0.0000
2730	GLOBAL	Cartesian	5.5000	50.0000	-4.5000
2731	GLOBAL	Cartesian	5.5000	55.0000	0.0000

Table 1: Joint Coordinates

Joint	CoordSys	CoordType	GlobalX	GlobalY	GlobalZ
			ft	ft	ft
2732	GLOBAL	Cartesian	5.5000	55.0000	-4.5000
2733	GLOBAL	Cartesian	0.0000	20.0000	0.0000
2734	GLOBAL	Cartesian	0.0000	20.0000	-4.5000
2735	GLOBAL	Cartesian	0.0000	25.0000	0.0000
2736	GLOBAL	Cartesian	0.0000	25.0000	-4.5000
2737	GLOBAL	Cartesian	0.0000	30.0000	0.0000
2738	GLOBAL	Cartesian	-1.421E-14	30.0000	-4.5000
2739	GLOBAL	Cartesian	0.0000	35.0000	0.0000
2740	GLOBAL	Cartesian	0.0000	35.0000	-4.5000
2741	GLOBAL	Cartesian	0.0000	40.0000	0.0000
2742	GLOBAL	Cartesian	0.0000	40.0000	-4.5000
2743	GLOBAL	Cartesian	0.0000	45.0000	0.0000
2744	GLOBAL	Cartesian	0.0000	45.0000	-4.5000
2745	GLOBAL	Cartesian	0.0000	50.0000	0.0000
2746	GLOBAL	Cartesian	0.0000	50.0000	-4.5000
2747	GLOBAL	Cartesian	31.6250	2.5000	0.0000
2748	GLOBAL	Cartesian	31.6250	2.5000	-4.5000
2749	GLOBAL	Cartesian	28.8750	2.5000	0.0000
2750	GLOBAL	Cartesian	28.8750	2.5000	-4.5000
2751	GLOBAL	Cartesian	31.6250	7.5000	0.0000
2752	GLOBAL	Cartesian	31.6250	7.5000	-4.5000
2753	GLOBAL	Cartesian	28.8750	7.5000	0.0000
2754	GLOBAL	Cartesian	28.8750	7.5000	-4.5000
2755	GLOBAL	Cartesian	31.6250	12.5000	0.0000
2756	GLOBAL	Cartesian	31.6250	12.5000	-4.5000
2757	GLOBAL	Cartesian	28.8750	12.5000	0.0000
2758	GLOBAL	Cartesian	28.8750	12.5000	-4.5000
2759	GLOBAL	Cartesian	26.1250	2.5000	0.0000
2760	GLOBAL	Cartesian	26.1250	2.5000	-4.5000
2761	GLOBAL	Cartesian	23.3750	2.5000	0.0000
2762	GLOBAL	Cartesian	23.3750	2.5000	-4.5000
2763	GLOBAL	Cartesian	26.1250	7.5000	0.0000
2764	GLOBAL	Cartesian	26.1250	7.5000	-4.5000
2765	GLOBAL	Cartesian	23.3750	7.5000	0.0000
2766	GLOBAL	Cartesian	23.3750	7.5000	-4.5000
2767	GLOBAL	Cartesian	26.1250	12.5000	0.0000
2768	GLOBAL	Cartesian	26.1250	12.5000	-4.5000
2769	GLOBAL	Cartesian	23.3750	12.5000	0.0000

Table 1: Joint Coordinates

Joint	CoordSys	CoordType	GlobalX	GlobalY	GlobalZ
			ft	ft	ft
2770	GLOBAL	Cartesian	23.3750	12.5000	-4.5000
2771	GLOBAL	Cartesian	20.6250	2.5000	0.0000
2772	GLOBAL	Cartesian	20.6250	2.5000	-4.5000
2773	GLOBAL	Cartesian	17.8750	2.5000	0.0000
2774	GLOBAL	Cartesian	17.8750	2.5000	-4.5000
2775	GLOBAL	Cartesian	20.6250	7.5000	0.0000
2776	GLOBAL	Cartesian	20.6250	7.5000	-4.5000
2777	GLOBAL	Cartesian	17.8750	7.5000	0.0000
2778	GLOBAL	Cartesian	17.8750	7.5000	-4.5000
2779	GLOBAL	Cartesian	20.6250	12.5000	0.0000
2780	GLOBAL	Cartesian	20.6250	12.5000	-4.5000
2781	GLOBAL	Cartesian	17.8750	12.5000	0.0000
2782	GLOBAL	Cartesian	17.8750	12.5000	-4.5000
2783	GLOBAL	Cartesian	15.1250	7.5000	0.0000
2784	GLOBAL	Cartesian	15.1250	7.5000	-4.5000
2785	GLOBAL	Cartesian	12.3750	7.5000	0.0000
2786	GLOBAL	Cartesian	12.3750	7.5000	-4.5000
2787	GLOBAL	Cartesian	15.1250	12.5000	0.0000
2788	GLOBAL	Cartesian	15.1250	12.5000	-4.5000
2789	GLOBAL	Cartesian	12.3750	12.5000	0.0000
2790	GLOBAL	Cartesian	12.3750	12.5000	-4.5000
2791	GLOBAL	Cartesian	31.6250	67.5000	0.0000
2792	GLOBAL	Cartesian	31.6250	67.5000	-4.5000
2793	GLOBAL	Cartesian	28.8750	67.5000	0.0000
2794	GLOBAL	Cartesian	28.8750	67.5000	-4.5000
2795	GLOBAL	Cartesian	31.6250	62.5000	0.0000
2796	GLOBAL	Cartesian	31.6250	62.5000	-4.5000
2797	GLOBAL	Cartesian	28.8750	62.5000	0.0000
2798	GLOBAL	Cartesian	28.8750	62.5000	-4.5000
2799	GLOBAL	Cartesian	31.6250	57.5000	0.0000
2800	GLOBAL	Cartesian	31.6250	57.5000	-4.5000
2801	GLOBAL	Cartesian	28.8750	57.5000	0.0000
2802	GLOBAL	Cartesian	28.8750	57.5000	-4.5000
2803	GLOBAL	Cartesian	26.1250	67.5000	0.0000
2804	GLOBAL	Cartesian	26.1250	67.5000	-4.5000
2805	GLOBAL	Cartesian	23.3750	67.5000	0.0000
2806	GLOBAL	Cartesian	23.3750	67.5000	-4.5000
2807	GLOBAL	Cartesian	26.1250	62.5000	0.0000

Table 1: Joint Coordinates

Joint	CoordSys	CoordType	GlobalX	GlobalY	GlobalZ
			ft	ft	ft
2808	GLOBAL	Cartesian	26.1250	62.5000	-4.5000
2809	GLOBAL	Cartesian	23.3750	62.5000	0.0000
2810	GLOBAL	Cartesian	23.3750	62.5000	-4.5000
2811	GLOBAL	Cartesian	26.1250	57.5000	0.0000
2812	GLOBAL	Cartesian	26.1250	57.5000	-4.5000
2813	GLOBAL	Cartesian	23.3750	57.5000	0.0000
2814	GLOBAL	Cartesian	23.3750	57.5000	-4.5000
2815	GLOBAL	Cartesian	20.6250	67.5000	0.0000
2816	GLOBAL	Cartesian	20.6250	67.5000	-4.5000
2817	GLOBAL	Cartesian	17.8750	67.5000	0.0000
2818	GLOBAL	Cartesian	17.8750	67.5000	-4.5000
2819	GLOBAL	Cartesian	20.6250	62.5000	0.0000
2820	GLOBAL	Cartesian	20.6250	62.5000	-4.5000
2821	GLOBAL	Cartesian	17.8750	62.5000	0.0000
2822	GLOBAL	Cartesian	17.8750	62.5000	-4.5000
2823	GLOBAL	Cartesian	20.6250	57.5000	0.0000
2824	GLOBAL	Cartesian	20.6250	57.5000	-4.5000
2825	GLOBAL	Cartesian	17.8750	57.5000	0.0000
2826	GLOBAL	Cartesian	17.8750	57.5000	-4.5000
2827	GLOBAL	Cartesian	20.6250	52.5000	0.0000
2828	GLOBAL	Cartesian	20.6250	52.5000	-4.5000
2829	GLOBAL	Cartesian	17.8750	52.5000	0.0000
2830	GLOBAL	Cartesian	17.8750	52.5000	-4.5000
2831	GLOBAL	Cartesian	17.8750	47.5000	0.0000
2832	GLOBAL	Cartesian	17.8750	47.5000	-4.5000
2833	GLOBAL	Cartesian	20.6250	17.5000	0.0000
2834	GLOBAL	Cartesian	20.6250	17.5000	-4.5000
2835	GLOBAL	Cartesian	17.8750	17.5000	0.0000
2836	GLOBAL	Cartesian	17.8750	17.5000	-4.5000
2837	GLOBAL	Cartesian	17.8750	22.5000	0.0000
2838	GLOBAL	Cartesian	17.8750	22.5000	-4.5000
2839	GLOBAL	Cartesian	15.1250	52.5000	0.0000
2840	GLOBAL	Cartesian	15.1250	52.5000	-4.5000
2841	GLOBAL	Cartesian	12.3750	52.5000	0.0000
2842	GLOBAL	Cartesian	12.3750	52.5000	-4.5000
2843	GLOBAL	Cartesian	15.1250	17.5000	0.0000
2844	GLOBAL	Cartesian	15.1250	17.5000	-4.5000
2845	GLOBAL	Cartesian	12.3750	17.5000	0.0000

Table 1: Joint Coordinates

Joint	CoordSys	CoordType	GlobalX	GlobalY	GlobalZ
			ft	ft	ft
2846	GLOBAL	Cartesian	12.3750	17.5000	-4.5000
2847	GLOBAL	Cartesian	9.6250	52.5000	0.0000
2848	GLOBAL	Cartesian	9.6250	52.5000	-4.5000
2849	GLOBAL	Cartesian	6.8750	52.5000	0.0000
2850	GLOBAL	Cartesian	6.8750	52.5000	-4.5000
2851	GLOBAL	Cartesian	9.6250	17.5000	0.0000
2852	GLOBAL	Cartesian	9.6250	17.5000	-4.5000
2853	GLOBAL	Cartesian	6.8750	17.5000	0.0000
2854	GLOBAL	Cartesian	6.8750	17.5000	-4.5000
2855	GLOBAL	Cartesian	4.1250	52.5000	0.0000
2856	GLOBAL	Cartesian	4.1250	52.5000	-4.5000
2857	GLOBAL	Cartesian	4.1250	17.5000	0.0000
2858	GLOBAL	Cartesian	4.1250	17.5000	-4.5000
2859	GLOBAL	Cartesian	15.1250	22.5000	0.0000
2860	GLOBAL	Cartesian	15.1250	22.5000	-4.5000
2861	GLOBAL	Cartesian	12.3750	22.5000	0.0000
2862	GLOBAL	Cartesian	12.3750	22.5000	-4.5000
2863	GLOBAL	Cartesian	12.3750	27.5000	0.0000
2864	GLOBAL	Cartesian	12.3750	27.5000	-4.5000
2865	GLOBAL	Cartesian	12.3750	32.5000	0.0000
2866	GLOBAL	Cartesian	12.3750	32.5000	-4.5000
2867	GLOBAL	Cartesian	12.3750	37.5000	0.0000
2868	GLOBAL	Cartesian	12.3750	37.5000	-4.5000
2869	GLOBAL	Cartesian	12.3750	42.5000	0.0000
2870	GLOBAL	Cartesian	12.3750	42.5000	-4.5000
2871	GLOBAL	Cartesian	15.1250	47.5000	0.0000
2872	GLOBAL	Cartesian	15.1250	47.5000	-4.5000
2873	GLOBAL	Cartesian	12.3750	47.5000	0.0000
2874	GLOBAL	Cartesian	12.3750	47.5000	-4.5000
2875	GLOBAL	Cartesian	9.6250	22.5000	0.0000
2876	GLOBAL	Cartesian	9.6250	22.5000	-4.5000
2877	GLOBAL	Cartesian	6.8750	22.5000	0.0000
2878	GLOBAL	Cartesian	6.8750	22.5000	-4.5000
2879	GLOBAL	Cartesian	9.6250	47.5000	0.0000
2880	GLOBAL	Cartesian	9.6250	47.5000	-4.5000
2881	GLOBAL	Cartesian	6.8750	47.5000	0.0000
2882	GLOBAL	Cartesian	6.8750	47.5000	-4.5000
2883	GLOBAL	Cartesian	4.1250	22.5000	0.0000

Table 1: Joint Coordinates

Joint	CoordSys	CoordType	GlobalX	GlobalY	GlobalZ
			ft	ft	ft
2884	GLOBAL	Cartesian	4.1250	22.5000	-4.5000
2885	GLOBAL	Cartesian	1.3750	22.5000	0.0000
2886	GLOBAL	Cartesian	1.3750	22.5000	-4.5000
2887	GLOBAL	Cartesian	4.1250	47.5000	0.0000
2888	GLOBAL	Cartesian	4.1250	47.5000	-4.5000
2889	GLOBAL	Cartesian	1.3750	47.5000	0.0000
2890	GLOBAL	Cartesian	1.3750	47.5000	-4.5000
2891	GLOBAL	Cartesian	9.6250	27.5000	0.0000
2892	GLOBAL	Cartesian	9.6250	27.5000	-4.5000
2893	GLOBAL	Cartesian	6.8750	27.5000	0.0000
2894	GLOBAL	Cartesian	6.8750	27.5000	-4.5000
2895	GLOBAL	Cartesian	4.1250	27.5000	0.0000
2896	GLOBAL	Cartesian	4.1250	27.5000	-4.5000
2897	GLOBAL	Cartesian	1.3750	27.5000	0.0000
2898	GLOBAL	Cartesian	1.3750	27.5000	-4.5000
2899	GLOBAL	Cartesian	9.6250	32.5000	0.0000
2900	GLOBAL	Cartesian	9.6250	32.5000	-4.5000
2901	GLOBAL	Cartesian	6.8750	32.5000	0.0000
2902	GLOBAL	Cartesian	6.8750	32.5000	-4.5000
2903	GLOBAL	Cartesian	4.1250	32.5000	0.0000
2904	GLOBAL	Cartesian	4.1250	32.5000	-4.5000
2905	GLOBAL	Cartesian	1.3750	32.5000	0.0000
2906	GLOBAL	Cartesian	1.3750	32.5000	-4.5000
2907	GLOBAL	Cartesian	9.6250	37.5000	0.0000
2908	GLOBAL	Cartesian	9.6250	37.5000	-4.5000
2909	GLOBAL	Cartesian	6.8750	37.5000	0.0000
2910	GLOBAL	Cartesian	6.8750	37.5000	-4.5000
2911	GLOBAL	Cartesian	4.1250	37.5000	0.0000
2912	GLOBAL	Cartesian	4.1250	37.5000	-4.5000
2913	GLOBAL	Cartesian	1.3750	37.5000	0.0000
2914	GLOBAL	Cartesian	1.3750	37.5000	-4.5000
2915	GLOBAL	Cartesian	9.6250	42.5000	0.0000
2916	GLOBAL	Cartesian	9.6250	42.5000	-4.5000
2917	GLOBAL	Cartesian	6.8750	42.5000	0.0000
2918	GLOBAL	Cartesian	6.8750	42.5000	-4.5000
2919	GLOBAL	Cartesian	4.1250	42.5000	0.0000
2920	GLOBAL	Cartesian	4.1250	42.5000	-4.5000
2921	GLOBAL	Cartesian	1.3750	42.5000	0.0000

Table 1: Joint Coordinates

Joint	CoordSys	CoordType	GlobalX	GlobalY	GlobalZ
			ft	ft	ft
2922	GLOBAL	Cartesian	1.3750	42.5000	-4.5000
2923	GLOBAL	Cartesian	9.6250	12.5000	0.0000
2924	GLOBAL	Cartesian	9.6250	12.5000	-4.5000
2925	GLOBAL	Cartesian	6.8750	12.5000	0.0000
2926	GLOBAL	Cartesian	6.8750	12.5000	-4.5000
2927	GLOBAL	Cartesian	15.1250	62.5000	0.0000
2928	GLOBAL	Cartesian	15.1250	62.5000	-4.5000
2929	GLOBAL	Cartesian	12.3750	62.5000	0.0000
2930	GLOBAL	Cartesian	12.3750	62.5000	-4.5000
2931	GLOBAL	Cartesian	15.1250	57.5000	0.0000
2932	GLOBAL	Cartesian	15.1250	57.5000	-4.5000
2933	GLOBAL	Cartesian	12.3750	57.5000	0.0000
2934	GLOBAL	Cartesian	12.3750	57.5000	-4.5000
2935	GLOBAL	Cartesian	9.6250	57.5000	0.0000
2936	GLOBAL	Cartesian	9.6250	57.5000	-4.5000
2937	GLOBAL	Cartesian	6.8750	57.5000	0.0000
2938	GLOBAL	Cartesian	6.8750	57.5000	-4.5000
2939	GLOBAL	Cartesian	6.8750	28.7500	0.0000
2940	GLOBAL	Cartesian	8.7500	28.7500	-4.5000
2941	GLOBAL	Cartesian	4.1250	28.7500	0.0000
2942	GLOBAL	Cartesian	6.0000	28.7500	-4.5000
2943	GLOBAL	Cartesian	1.3750	28.7500	0.0000
2944	GLOBAL	Cartesian	3.2500	28.7500	-4.5000
2945	GLOBAL	Cartesian	6.8750	23.7500	0.0000
2946	GLOBAL	Cartesian	8.7500	23.7500	-4.5000
2947	GLOBAL	Cartesian	4.1250	23.7500	0.0000
2948	GLOBAL	Cartesian	6.0000	23.7500	-4.5000
2949	GLOBAL	Cartesian	1.3750	23.7500	0.0000
2950	GLOBAL	Cartesian	3.2500	23.7500	-4.5000
2951	GLOBAL	Cartesian	4.1250	33.7500	0.0000
2952	GLOBAL	Cartesian	6.0000	33.7500	-4.5000
2953	GLOBAL	Cartesian	1.3750	33.7500	0.0000
2954	GLOBAL	Cartesian	3.2500	33.7500	-4.5000
2955	GLOBAL	Cartesian	4.1250	36.2500	0.0000
2956	GLOBAL	Cartesian	1.3750	36.2500	0.0000
2957	GLOBAL	Cartesian	3.2500	36.2500	-4.5000
2958	GLOBAL	Cartesian	4.1250	41.2500	0.0000
2959	GLOBAL	Cartesian	6.0000	41.2500	-4.5000

Table 1: Joint Coordinates

Joint	CoordSys	CoordType	GlobalX	GlobalY	GlobalZ
			ft	ft	ft
2960	GLOBAL	Cartesian	1.3750	41.2500	0.0000
2961	GLOBAL	Cartesian	3.2500	41.2500	-4.5000
2962	GLOBAL	Cartesian	4.1250	46.2500	0.0000
2963	GLOBAL	Cartesian	6.0000	46.2500	-4.5000
2964	GLOBAL	Cartesian	1.3750	46.2500	0.0000
2965	GLOBAL	Cartesian	3.2500	46.2500	-4.5000
2966	GLOBAL	Cartesian	6.8750	41.2500	0.0000
2967	GLOBAL	Cartesian	8.7500	41.2500	-4.5000
2968	GLOBAL	Cartesian	6.8750	46.2500	0.0000
2969	GLOBAL	Cartesian	8.7500	46.2500	-4.5000
2970	GLOBAL	Cartesian	2.7500	48.7500	0.0000
2971	GLOBAL	Cartesian	4.6250	48.7500	-4.5000
2972	GLOBAL	Cartesian	5.5000	48.7500	0.0000
2973	GLOBAL	Cartesian	7.3750	48.7500	-4.5000
2974	GLOBAL	Cartesian	4.1250	51.2500	0.0000
2975	GLOBAL	Cartesian	6.0000	51.2500	-4.5000
2976	GLOBAL	Cartesian	6.8750	51.2500	0.0000
2977	GLOBAL	Cartesian	8.7500	51.2500	-4.5000
2978	GLOBAL	Cartesian	5.5000	53.7500	0.0000
2979	GLOBAL	Cartesian	7.3750	53.7500	-4.5000
2980	GLOBAL	Cartesian	2.7500	43.7500	0.0000
2981	GLOBAL	Cartesian	4.6250	43.7500	-4.5000
2982	GLOBAL	Cartesian	5.5000	43.7500	0.0000
2983	GLOBAL	Cartesian	7.3750	43.7500	-4.5000
2984	GLOBAL	Cartesian	2.7500	38.7500	0.0000
2985	GLOBAL	Cartesian	4.6250	38.7500	-4.5000
2986	GLOBAL	Cartesian	5.5000	38.7500	0.0000
2987	GLOBAL	Cartesian	7.3750	38.7500	-4.5000
2988	GLOBAL	Cartesian	5.5000	31.2500	0.0000
2989	GLOBAL	Cartesian	7.3750	31.2500	-4.5000
2990	GLOBAL	Cartesian	2.7500	31.2500	0.0000
2991	GLOBAL	Cartesian	4.6250	31.2500	-4.5000
2992	GLOBAL	Cartesian	5.5000	26.2500	0.0000
2993	GLOBAL	Cartesian	7.3750	26.2500	-4.5000
2994	GLOBAL	Cartesian	2.7500	26.2500	0.0000
2995	GLOBAL	Cartesian	4.6250	26.2500	-4.5000
2996	GLOBAL	Cartesian	5.5000	21.2500	0.0000
2997	GLOBAL	Cartesian	7.3750	21.2500	-4.5000

Table 1: Joint Coordinates

Joint	CoordSys	CoordType	GlobalX	GlobalY	GlobalZ
			ft	ft	ft
2998	GLOBAL	Cartesian	2.7500	21.2500	0.0000
2999	GLOBAL	Cartesian	4.6250	21.2500	-4.5000
3000	GLOBAL	Cartesian	6.8750	18.7500	0.0000
3001	GLOBAL	Cartesian	8.7500	18.7500	-4.5000
3002	GLOBAL	Cartesian	4.1250	18.7500	0.0000
3003	GLOBAL	Cartesian	6.0000	18.7500	-4.5000
3004	GLOBAL	Cartesian	5.5000	16.2500	0.0000
3005	GLOBAL	Cartesian	7.3750	16.2500	-4.5000
3006	GLOBAL	Cartesian	35.7500	55.0000	0.0000
3007	GLOBAL	Cartesian	35.7500	15.0000	0.0000
3008	GLOBAL	Cartesian	71.5000	30.0000	0.0000
3009	GLOBAL	Cartesian	71.5000	40.0000	0.0000
3010	GLOBAL	Cartesian	71.5000	35.0000	0.0000
3011	GLOBAL	Cartesian	68.7500	43.7500	0.0000
3012	GLOBAL	Cartesian	68.7500	26.2500	0.0000
3013	GLOBAL	Cartesian	57.7500	26.2500	0.0000
3014	GLOBAL	Cartesian	57.7500	43.7500	0.0000
3015	GLOBAL	Cartesian	6.8750	33.7500	0.0000
3016	GLOBAL	Cartesian	8.7500	33.7500	-4.5000
3017	GLOBAL	Cartesian	30.2500	25.0000	2.0000
3018	GLOBAL	Cartesian	30.2500	30.0000	2.0000
3019	GLOBAL	Cartesian	24.7500	25.0000	2.0000
3020	GLOBAL	Cartesian	24.7500	30.0000	2.0000
3021	GLOBAL	Cartesian	30.2500	35.0000	2.0000
3022	GLOBAL	Cartesian	24.7500	35.0000	2.0000
3023	GLOBAL	Cartesian	30.2500	40.0000	2.0000
3024	GLOBAL	Cartesian	24.7500	40.0000	2.0000
3025	GLOBAL	Cartesian	30.2500	45.0000	2.0000
3026	GLOBAL	Cartesian	24.7500	45.0000	2.0000
3027	GLOBAL	Cartesian	30.2500	50.0000	2.0000
3028	GLOBAL	Cartesian	24.7500	50.0000	2.0000
3029	GLOBAL	Cartesian	30.2500	20.0000	2.0000
3030	GLOBAL	Cartesian	24.7500	20.0000	2.0000
3031	GLOBAL	Cartesian	35.7500	20.0000	2.0000
3032	GLOBAL	Cartesian	35.7500	25.0000	2.0000
3033	GLOBAL	Cartesian	35.7500	30.0000	2.0000
3034	GLOBAL	Cartesian	35.7500	35.0000	2.0000
3035	GLOBAL	Cartesian	35.7500	40.0000	2.0000

Table 1: Joint Coordinates

Joint	CoordSys	CoordType	GlobalX	GlobalY	GlobalZ
			ft	ft	ft
3036	GLOBAL	Cartesian	35.7500	45.0000	2.0000
3037	GLOBAL	Cartesian	35.7500	50.0000	2.0000
3038	GLOBAL	Cartesian	35.7500	55.0000	2.0000
3039	GLOBAL	Cartesian	30.2500	55.0000	2.0000
3040	GLOBAL	Cartesian	24.7500	55.0000	2.0000
3041	GLOBAL	Cartesian	41.2500	50.0000	2.0000
3042	GLOBAL	Cartesian	41.2500	55.0000	2.0000
3043	GLOBAL	Cartesian	41.2500	20.0000	2.0000
3044	GLOBAL	Cartesian	41.2500	25.0000	2.0000
3045	GLOBAL	Cartesian	41.2500	30.0000	2.0000
3046	GLOBAL	Cartesian	41.2500	35.0000	2.0000
3047	GLOBAL	Cartesian	41.2500	40.0000	2.0000
3048	GLOBAL	Cartesian	41.2500	45.0000	2.0000
3049	GLOBAL	Cartesian	19.2500	25.0000	2.0000
3050	GLOBAL	Cartesian	19.2500	30.0000	2.0000
3051	GLOBAL	Cartesian	19.2500	35.0000	2.0000
3052	GLOBAL	Cartesian	19.2500	40.0000	2.0000
3053	GLOBAL	Cartesian	19.2500	45.0000	2.0000
3054	GLOBAL	Cartesian	19.2500	50.0000	2.0000
3055	GLOBAL	Cartesian	19.2500	20.0000	2.0000
3056	GLOBAL	Cartesian	46.7500	20.0000	2.0000
3057	GLOBAL	Cartesian	46.7500	25.0000	2.0000
3058	GLOBAL	Cartesian	46.7500	30.0000	2.0000
3059	GLOBAL	Cartesian	46.7500	35.0000	2.0000
3060	GLOBAL	Cartesian	46.7500	40.0000	2.0000
3061	GLOBAL	Cartesian	46.7500	45.0000	2.0000
3062	GLOBAL	Cartesian	46.7500	50.0000	2.0000
3063	GLOBAL	Cartesian	46.7500	55.0000	2.0000
3064	GLOBAL	Cartesian	46.7500	15.0000	2.0000
3065	GLOBAL	Cartesian	41.2500	15.0000	2.0000
3066	GLOBAL	Cartesian	35.7500	15.0000	2.0000
3067	GLOBAL	Cartesian	30.2500	15.0000	2.0000
3068	GLOBAL	Cartesian	24.7500	15.0000	2.0000
3069	GLOBAL	Cartesian	52.2500	25.0000	2.0000
3070	GLOBAL	Cartesian	52.2500	30.0000	2.0000
3071	GLOBAL	Cartesian	52.2500	35.0000	2.0000
3072	GLOBAL	Cartesian	52.2500	40.0000	2.0000
3073	GLOBAL	Cartesian	52.2500	45.0000	2.0000

Table 1: Joint Coordinates

Joint	CoordSys	CoordType	GlobalX	GlobalY	GlobalZ
			ft	ft	ft
3074	GLOBAL	Cartesian	52.2500	50.0000	2.0000
3075	GLOBAL	Cartesian	52.2500	20.0000	2.0000
3076	GLOBAL	Cartesian	13.7500	30.0000	2.0000
3077	GLOBAL	Cartesian	13.7500	35.0000	2.0000
3078	GLOBAL	Cartesian	13.7500	40.0000	2.0000
3079	GLOBAL	Cartesian	13.7500	45.0000	2.0000
3080	GLOBAL	Cartesian	13.7500	25.0000	2.0000
3081	GLOBAL	Cartesian	11.0000	30.0000	2.0000
3082	GLOBAL	Cartesian	9.6250	27.5000	2.0000
3083	GLOBAL	Cartesian	12.3750	27.5000	2.0000
3084	GLOBAL	Cartesian	11.0000	25.0000	2.0000
3085	GLOBAL	Cartesian	9.6250	32.5000	2.0000
3086	GLOBAL	Cartesian	8.2500	30.0000	2.0000
3087	GLOBAL	Cartesian	9.6250	37.5000	2.0000
3088	GLOBAL	Cartesian	8.2500	35.0000	2.0000
3089	GLOBAL	Cartesian	11.0000	35.0000	2.0000
3090	GLOBAL	Cartesian	12.3750	32.5000	2.0000
3091	GLOBAL	Cartesian	9.6250	42.5000	2.0000
3092	GLOBAL	Cartesian	8.2500	40.0000	2.0000
3093	GLOBAL	Cartesian	11.0000	40.0000	2.0000
3094	GLOBAL	Cartesian	9.6250	47.5000	2.0000
3095	GLOBAL	Cartesian	8.2500	45.0000	2.0000
3096	GLOBAL	Cartesian	11.0000	45.0000	2.0000
3097	GLOBAL	Cartesian	12.3750	37.5000	2.0000
3098	GLOBAL	Cartesian	12.3750	42.5000	2.0000
3099	GLOBAL	Cartesian	11.0000	50.0000	2.0000
3100	GLOBAL	Cartesian	12.3750	47.5000	2.0000
3101	GLOBAL	Cartesian	11.0000	55.0000	2.0000
3102	GLOBAL	Cartesian	9.6250	52.5000	2.0000
3103	GLOBAL	Cartesian	12.3750	52.5000	2.0000
3104	GLOBAL	Cartesian	11.0000	60.0000	2.0000
3105	GLOBAL	Cartesian	9.6250	57.5000	2.0000
3106	GLOBAL	Cartesian	12.3750	57.5000	2.0000
3107	GLOBAL	Cartesian	13.7500	50.0000	2.0000
3108	GLOBAL	Cartesian	13.7500	55.0000	2.0000
3109	GLOBAL	Cartesian	12.3750	62.5000	2.0000
3110	GLOBAL	Cartesian	13.7500	60.0000	2.0000
3111	GLOBAL	Cartesian	15.1250	47.5000	2.0000

Table 1: Joint Coordinates

Joint	CoordSys	CoordType	GlobalX	GlobalY	GlobalZ
			ft	ft	ft
3112	GLOBAL	Cartesian	15.1250	52.5000	2.0000
3113	GLOBAL	Cartesian	16.5000	50.0000	2.0000
3114	GLOBAL	Cartesian	15.1250	57.5000	2.0000
3115	GLOBAL	Cartesian	16.5000	55.0000	2.0000
3116	GLOBAL	Cartesian	17.8750	52.5000	2.0000
3117	GLOBAL	Cartesian	16.5000	60.0000	2.0000
3118	GLOBAL	Cartesian	17.8750	57.5000	2.0000
3119	GLOBAL	Cartesian	15.1250	62.5000	2.0000
3120	GLOBAL	Cartesian	16.5000	65.0000	2.0000
3121	GLOBAL	Cartesian	17.8750	62.5000	2.0000
3122	GLOBAL	Cartesian	17.8750	67.5000	2.0000
3123	GLOBAL	Cartesian	19.2500	65.0000	2.0000
3124	GLOBAL	Cartesian	19.2500	60.0000	2.0000
3125	GLOBAL	Cartesian	20.6250	62.5000	2.0000
3126	GLOBAL	Cartesian	20.6250	67.5000	2.0000
3127	GLOBAL	Cartesian	22.0000	65.0000	2.0000
3128	GLOBAL	Cartesian	22.0000	70.0000	2.0000
3129	GLOBAL	Cartesian	23.3750	67.5000	2.0000
3130	GLOBAL	Cartesian	19.2500	55.0000	2.0000
3131	GLOBAL	Cartesian	20.6250	52.5000	2.0000
3132	GLOBAL	Cartesian	20.6250	57.5000	2.0000
3133	GLOBAL	Cartesian	22.0000	60.0000	2.0000
3134	GLOBAL	Cartesian	23.3750	62.5000	2.0000
3135	GLOBAL	Cartesian	22.0000	55.0000	2.0000
3136	GLOBAL	Cartesian	23.3750	57.5000	2.0000
3137	GLOBAL	Cartesian	24.7500	60.0000	2.0000
3138	GLOBAL	Cartesian	24.7500	65.0000	2.0000
3139	GLOBAL	Cartesian	24.7500	70.0000	2.0000
3140	GLOBAL	Cartesian	26.1250	67.5000	2.0000
3141	GLOBAL	Cartesian	26.1250	62.5000	2.0000
3142	GLOBAL	Cartesian	27.5000	60.0000	2.0000
3143	GLOBAL	Cartesian	27.5000	65.0000	2.0000
3144	GLOBAL	Cartesian	28.8750	62.5000	2.0000
3145	GLOBAL	Cartesian	26.1250	57.5000	2.0000
3146	GLOBAL	Cartesian	30.2500	60.0000	2.0000
3147	GLOBAL	Cartesian	28.8750	57.5000	2.0000
3148	GLOBAL	Cartesian	30.2500	65.0000	2.0000
3149	GLOBAL	Cartesian	31.6250	62.5000	2.0000

Table 1: Joint Coordinates

Joint	CoordSys	CoordType	GlobalX	GlobalY	GlobalZ
			ft	ft	ft
3150	GLOBAL	Cartesian	28.8750	67.5000	2.0000
3151	GLOBAL	Cartesian	27.5000	70.0000	2.0000
3152	GLOBAL	Cartesian	30.2500	70.0000	2.0000
3153	GLOBAL	Cartesian	31.6250	67.5000	2.0000
3154	GLOBAL	Cartesian	33.0000	65.0000	2.0000
3155	GLOBAL	Cartesian	33.0000	60.0000	2.0000
3156	GLOBAL	Cartesian	31.6250	57.5000	2.0000
3157	GLOBAL	Cartesian	35.7500	62.5000	2.0000
3158	GLOBAL	Cartesian	33.0000	70.0000	2.0000
3159	GLOBAL	Cartesian	35.7500	67.5000	2.0000
3160	GLOBAL	Cartesian	38.5000	65.0000	2.0000
3161	GLOBAL	Cartesian	41.2500	62.5000	2.0000
3162	GLOBAL	Cartesian	38.5000	60.0000	2.0000
3163	GLOBAL	Cartesian	35.7500	57.5000	2.0000
3164	GLOBAL	Cartesian	38.5000	70.0000	2.0000
3165	GLOBAL	Cartesian	41.2500	67.5000	2.0000
3166	GLOBAL	Cartesian	8.2500	50.0000	2.0000
3167	GLOBAL	Cartesian	8.2500	55.0000	2.0000
3168	GLOBAL	Cartesian	6.8750	47.5000	2.0000
3169	GLOBAL	Cartesian	6.8750	52.5000	2.0000
3170	GLOBAL	Cartesian	6.8750	42.5000	2.0000
3171	GLOBAL	Cartesian	6.8750	37.5000	2.0000
3172	GLOBAL	Cartesian	6.8750	32.5000	2.0000
3173	GLOBAL	Cartesian	6.8750	27.5000	2.0000
3174	GLOBAL	Cartesian	8.2500	25.0000	2.0000
3175	GLOBAL	Cartesian	9.6250	22.5000	2.0000
3176	GLOBAL	Cartesian	12.3750	22.5000	2.0000
3177	GLOBAL	Cartesian	11.0000	20.0000	2.0000
3178	GLOBAL	Cartesian	8.2500	20.0000	2.0000
3179	GLOBAL	Cartesian	9.6250	17.5000	2.0000
3180	GLOBAL	Cartesian	6.8750	17.5000	2.0000
3181	GLOBAL	Cartesian	8.2500	15.0000	2.0000
3182	GLOBAL	Cartesian	13.7500	20.0000	2.0000
3183	GLOBAL	Cartesian	12.3750	17.5000	2.0000
3184	GLOBAL	Cartesian	15.1250	22.5000	2.0000
3185	GLOBAL	Cartesian	16.5000	20.0000	2.0000
3186	GLOBAL	Cartesian	15.1250	17.5000	2.0000
3187	GLOBAL	Cartesian	17.8750	17.5000	2.0000

Table 1: Joint Coordinates

Joint	CoordSys	CoordType	GlobalX	GlobalY	GlobalZ
			ft	ft	ft
3188	GLOBAL	Cartesian	16.5000	15.0000	2.0000
3189	GLOBAL	Cartesian	13.7500	15.0000	2.0000
3190	GLOBAL	Cartesian	15.1250	12.5000	2.0000
3191	GLOBAL	Cartesian	12.3750	12.5000	2.0000
3192	GLOBAL	Cartesian	13.7500	10.0000	2.0000
3193	GLOBAL	Cartesian	11.0000	15.0000	2.0000
3194	GLOBAL	Cartesian	9.6250	12.5000	2.0000
3195	GLOBAL	Cartesian	11.0000	10.0000	2.0000
3196	GLOBAL	Cartesian	12.3750	7.5000	2.0000
3197	GLOBAL	Cartesian	16.5000	10.0000	2.0000
3198	GLOBAL	Cartesian	15.1250	7.5000	2.0000
3199	GLOBAL	Cartesian	17.8750	12.5000	2.0000
3200	GLOBAL	Cartesian	19.2500	15.0000	2.0000
3201	GLOBAL	Cartesian	17.8750	22.5000	2.0000
3202	GLOBAL	Cartesian	20.6250	17.5000	2.0000
3203	GLOBAL	Cartesian	22.0000	15.0000	2.0000
3204	GLOBAL	Cartesian	20.6250	12.5000	2.0000
3205	GLOBAL	Cartesian	19.2500	10.0000	2.0000
3206	GLOBAL	Cartesian	17.8750	7.5000	2.0000
3207	GLOBAL	Cartesian	16.5000	5.0000	2.0000
3208	GLOBAL	Cartesian	19.2500	5.0000	2.0000
3209	GLOBAL	Cartesian	17.8750	2.5000	2.0000
3210	GLOBAL	Cartesian	20.6250	7.5000	2.0000
3211	GLOBAL	Cartesian	22.0000	10.0000	2.0000
3212	GLOBAL	Cartesian	23.3750	12.5000	2.0000
3213	GLOBAL	Cartesian	24.7500	10.0000	2.0000
3214	GLOBAL	Cartesian	23.3750	7.5000	2.0000
3215	GLOBAL	Cartesian	22.0000	5.0000	2.0000
3216	GLOBAL	Cartesian	20.6250	2.5000	2.0000
3217	GLOBAL	Cartesian	26.1250	12.5000	2.0000
3218	GLOBAL	Cartesian	26.1250	7.5000	2.0000
3219	GLOBAL	Cartesian	24.7500	5.0000	2.0000
3220	GLOBAL	Cartesian	23.3750	2.5000	2.0000
3221	GLOBAL	Cartesian	22.0000	2.863E-15	2.0000
3222	GLOBAL	Cartesian	26.1250	2.5000	2.0000
3223	GLOBAL	Cartesian	24.7500	2.694E-15	2.0000
3224	GLOBAL	Cartesian	27.5000	5.0000	2.0000
3225	GLOBAL	Cartesian	27.5000	10.0000	2.0000

Table 1: Joint Coordinates

Joint	CoordSys	CoordType	GlobalX	GlobalY	GlobalZ
			ft	ft	ft
3226	GLOBAL	Cartesian	28.8750	7.5000	2.0000
3227	GLOBAL	Cartesian	28.8750	12.5000	2.0000
3228	GLOBAL	Cartesian	30.2500	10.0000	2.0000
3229	GLOBAL	Cartesian	31.6250	12.5000	2.0000
3230	GLOBAL	Cartesian	33.0000	10.0000	2.0000
3231	GLOBAL	Cartesian	31.6250	7.5000	2.0000
3232	GLOBAL	Cartesian	30.2500	5.0000	2.0000
3233	GLOBAL	Cartesian	28.8750	2.5000	2.0000
3234	GLOBAL	Cartesian	27.5000	2.526E-15	2.0000
3235	GLOBAL	Cartesian	31.6250	2.5000	2.0000
3236	GLOBAL	Cartesian	30.2500	2.357E-15	2.0000
3237	GLOBAL	Cartesian	33.0000	5.0000	2.0000
3238	GLOBAL	Cartesian	35.7500	7.5000	2.0000
3239	GLOBAL	Cartesian	38.5000	5.0000	2.0000
3240	GLOBAL	Cartesian	35.7500	2.5000	2.0000
3241	GLOBAL	Cartesian	33.0000	2.189E-15	2.0000
3242	GLOBAL	Cartesian	41.2500	2.5000	2.0000
3243	GLOBAL	Cartesian	38.5000	1.852E-15	2.0000
3244	GLOBAL	Cartesian	38.5000	10.0000	2.0000
3245	GLOBAL	Cartesian	41.2500	7.5000	2.0000
3246	GLOBAL	Cartesian	35.7500	12.5000	2.0000
3247	GLOBAL	Cartesian	41.2500	12.5000	2.0000
3248	GLOBAL	Cartesian	41.2500	10.0000	2.0000
3249	GLOBAL	Cartesian	41.2500	5.0000	2.0000
3250	GLOBAL	Cartesian	41.2500	1.684E-15	2.0000
3251	GLOBAL	Cartesian	44.0000	3.7500	2.0000
3252	GLOBAL	Cartesian	44.0000	1.2500	2.0000
3253	GLOBAL	Cartesian	44.0000	6.2500	2.0000
3254	GLOBAL	Cartesian	44.0000	8.7500	2.0000
3255	GLOBAL	Cartesian	46.7500	1.347E-15	2.0000
3256	GLOBAL	Cartesian	44.0000	11.2500	2.0000
3257	GLOBAL	Cartesian	46.7500	12.5000	2.0000
3258	GLOBAL	Cartesian	46.7500	2.5000	2.0000
3259	GLOBAL	Cartesian	46.7500	5.0000	2.0000
3260	GLOBAL	Cartesian	46.7500	7.5000	2.0000
3261	GLOBAL	Cartesian	46.7500	10.0000	2.0000
3262	GLOBAL	Cartesian	49.5000	3.7500	2.0000
3263	GLOBAL	Cartesian	52.2500	2.5000	2.0000

Table 1: Joint Coordinates

Joint	CoordSys	CoordType	GlobalX	GlobalY	GlobalZ
			ft	ft	ft
3264	GLOBAL	Cartesian	49.5000	1.2500	2.0000
3265	GLOBAL	Cartesian	49.5000	6.2500	2.0000
3266	GLOBAL	Cartesian	52.2500	5.0000	2.0000
3267	GLOBAL	Cartesian	49.5000	8.7500	2.0000
3268	GLOBAL	Cartesian	52.2500	7.5000	2.0000
3269	GLOBAL	Cartesian	49.5000	11.2500	2.0000
3270	GLOBAL	Cartesian	52.2500	10.0000	2.0000
3271	GLOBAL	Cartesian	49.5000	13.7500	2.0000
3272	GLOBAL	Cartesian	52.2500	12.5000	2.0000
3273	GLOBAL	Cartesian	52.2500	1.010E-15	2.0000
3274	GLOBAL	Cartesian	52.2500	15.0000	2.0000
3275	GLOBAL	Cartesian	49.5000	16.2500	2.0000
3276	GLOBAL	Cartesian	52.2500	17.5000	2.0000
3277	GLOBAL	Cartesian	55.0000	5.7500	2.0000
3278	GLOBAL	Cartesian	55.0000	2.7500	2.0000
3279	GLOBAL	Cartesian	55.0000	8.2500	2.0000
3280	GLOBAL	Cartesian	55.0000	11.2500	2.0000
3281	GLOBAL	Cartesian	55.0000	13.7500	2.0000
3282	GLOBAL	Cartesian	55.0000	16.2500	2.0000
3283	GLOBAL	Cartesian	55.0000	18.7500	2.0000
3284	GLOBAL	Cartesian	57.7500	10.0000	2.0000
3285	GLOBAL	Cartesian	60.5000	8.7500	2.0000
3286	GLOBAL	Cartesian	57.7500	7.5000	2.0000
3287	GLOBAL	Cartesian	57.7500	12.5000	2.0000
3288	GLOBAL	Cartesian	60.5000	11.2500	2.0000
3289	GLOBAL	Cartesian	57.7500	15.0000	2.0000
3290	GLOBAL	Cartesian	60.5000	13.7500	2.0000
3291	GLOBAL	Cartesian	57.7500	17.5000	2.0000
3292	GLOBAL	Cartesian	60.5000	16.2500	2.0000
3293	GLOBAL	Cartesian	57.7500	20.0000	2.0000
3294	GLOBAL	Cartesian	60.5000	18.7500	2.0000
3295	GLOBAL	Cartesian	57.7500	22.5000	2.0000
3296	GLOBAL	Cartesian	55.0000	21.2500	2.0000
3297	GLOBAL	Cartesian	60.5000	21.2500	2.0000
3298	GLOBAL	Cartesian	57.7500	25.0000	2.0000
3299	GLOBAL	Cartesian	55.0000	23.7500	2.0000
3300	GLOBAL	Cartesian	60.5000	23.7500	2.0000
3301	GLOBAL	Cartesian	63.2500	12.5000	2.0000

Table 1: Joint Coordinates

Joint	CoordSys	CoordType	GlobalX	GlobalY	GlobalZ
			ft	ft	ft
3302	GLOBAL	Cartesian	63.2500	15.0000	2.0000
3303	GLOBAL	Cartesian	63.2500	17.5000	2.0000
3304	GLOBAL	Cartesian	63.2500	20.0000	2.0000
3305	GLOBAL	Cartesian	63.2500	22.5000	2.0000
3306	GLOBAL	Cartesian	60.5000	26.2500	2.0000
3307	GLOBAL	Cartesian	63.2500	25.0000	2.0000
3308	GLOBAL	Cartesian	60.5000	28.7500	2.0000
3309	GLOBAL	Cartesian	57.7500	27.5000	2.0000
3310	GLOBAL	Cartesian	63.2500	27.5000	2.0000
3311	GLOBAL	Cartesian	60.5000	31.2500	2.0000
3312	GLOBAL	Cartesian	57.7500	30.0000	2.0000
3313	GLOBAL	Cartesian	63.2500	30.0000	2.0000
3314	GLOBAL	Cartesian	60.5000	33.7500	2.0000
3315	GLOBAL	Cartesian	57.7500	32.5000	2.0000
3316	GLOBAL	Cartesian	63.2500	32.5000	2.0000
3317	GLOBAL	Cartesian	60.5000	36.2500	2.0000
3318	GLOBAL	Cartesian	57.7500	35.0000	2.0000
3319	GLOBAL	Cartesian	63.2500	35.0000	2.0000
3320	GLOBAL	Cartesian	60.5000	38.7500	2.0000
3321	GLOBAL	Cartesian	57.7500	37.5000	2.0000
3322	GLOBAL	Cartesian	63.2500	37.5000	2.0000
3323	GLOBAL	Cartesian	60.5000	41.2500	2.0000
3324	GLOBAL	Cartesian	57.7500	40.0000	2.0000
3325	GLOBAL	Cartesian	63.2500	40.0000	2.0000
3326	GLOBAL	Cartesian	60.5000	43.7500	2.0000
3327	GLOBAL	Cartesian	57.7500	42.5000	2.0000
3328	GLOBAL	Cartesian	63.2500	42.5000	2.0000
3329	GLOBAL	Cartesian	60.5000	46.2500	2.0000
3330	GLOBAL	Cartesian	57.7500	45.0000	2.0000
3331	GLOBAL	Cartesian	63.2500	45.0000	2.0000
3332	GLOBAL	Cartesian	60.5000	48.7500	2.0000
3333	GLOBAL	Cartesian	57.7500	47.5000	2.0000
3334	GLOBAL	Cartesian	63.2500	47.5000	2.0000
3335	GLOBAL	Cartesian	60.5000	51.2500	2.0000
3336	GLOBAL	Cartesian	57.7500	50.0000	2.0000
3337	GLOBAL	Cartesian	63.2500	50.0000	2.0000
3338	GLOBAL	Cartesian	66.0000	33.7500	2.0000
3339	GLOBAL	Cartesian	66.0000	36.2500	2.0000

Table 1: Joint Coordinates

Joint	CoordSys	CoordType	GlobalX	GlobalY	GlobalZ
			ft	ft	ft
3340	GLOBAL	Cartesian	66.0000	38.7500	2.0000
3341	GLOBAL	Cartesian	66.0000	41.2500	2.0000
3342	GLOBAL	Cartesian	66.0000	43.7500	2.0000
3343	GLOBAL	Cartesian	66.0000	46.2500	2.0000
3344	GLOBAL	Cartesian	66.0000	48.7500	2.0000
3345	GLOBAL	Cartesian	66.0000	51.2500	2.0000
3346	GLOBAL	Cartesian	68.7500	50.0000	2.0000
3347	GLOBAL	Cartesian	66.0000	53.7500	2.0000
3348	GLOBAL	Cartesian	63.2500	52.5000	2.0000
3349	GLOBAL	Cartesian	68.7500	52.5000	2.0000
3350	GLOBAL	Cartesian	68.7500	47.5000	2.0000
3351	GLOBAL	Cartesian	71.5000	48.7500	2.0000
3352	GLOBAL	Cartesian	68.7500	45.0000	2.0000
3353	GLOBAL	Cartesian	68.7500	42.5000	2.0000
3354	GLOBAL	Cartesian	68.7500	40.0000	2.0000
3355	GLOBAL	Cartesian	68.7500	37.5000	2.0000
3356	GLOBAL	Cartesian	68.7500	35.0000	2.0000
3357	GLOBAL	Cartesian	68.7500	32.5000	2.0000
3358	GLOBAL	Cartesian	66.0000	31.2500	2.0000
3359	GLOBAL	Cartesian	68.7500	30.0000	2.0000
3360	GLOBAL	Cartesian	66.0000	28.7500	2.0000
3361	GLOBAL	Cartesian	66.0000	26.2500	2.0000
3362	GLOBAL	Cartesian	66.0000	23.7500	2.0000
3363	GLOBAL	Cartesian	68.7500	25.0000	2.0000
3364	GLOBAL	Cartesian	68.7500	22.5000	2.0000
3365	GLOBAL	Cartesian	66.0000	21.2500	2.0000
3366	GLOBAL	Cartesian	66.0000	18.7500	2.0000
3367	GLOBAL	Cartesian	66.0000	16.2500	2.0000
3368	GLOBAL	Cartesian	68.7500	17.5000	2.0000
3369	GLOBAL	Cartesian	68.7500	20.0000	2.0000
3370	GLOBAL	Cartesian	71.5000	23.7500	2.0000
3371	GLOBAL	Cartesian	71.5000	28.7500	2.0000
3372	GLOBAL	Cartesian	71.5000	31.2500	2.0000
3373	GLOBAL	Cartesian	71.5000	33.7500	2.0000
3374	GLOBAL	Cartesian	71.5000	36.2500	2.0000
3375	GLOBAL	Cartesian	71.5000	38.7500	2.0000
3376	GLOBAL	Cartesian	71.5000	41.2500	2.0000
3377	GLOBAL	Cartesian	71.5000	46.2500	2.0000

Table 1: Joint Coordinates

Joint	CoordSys	CoordType	GlobalX	GlobalY	GlobalZ
			ft	ft	ft
3378	GLOBAL	Cartesian	71.5000	21.2500	2.0000
3379	GLOBAL	Cartesian	71.5000	26.2500	2.0000
3380	GLOBAL	Cartesian	71.5000	43.7500	2.0000
3381	GLOBAL	Cartesian	57.7500	52.5000	2.0000
3382	GLOBAL	Cartesian	60.5000	53.7500	2.0000
3383	GLOBAL	Cartesian	63.2500	55.0000	2.0000
3384	GLOBAL	Cartesian	57.7500	55.0000	2.0000
3385	GLOBAL	Cartesian	60.5000	56.2500	2.0000
3386	GLOBAL	Cartesian	60.5000	58.7500	2.0000
3387	GLOBAL	Cartesian	57.7500	57.5000	2.0000
3388	GLOBAL	Cartesian	63.2500	57.5000	2.0000
3389	GLOBAL	Cartesian	55.0000	46.2500	2.0000
3390	GLOBAL	Cartesian	55.0000	48.7500	2.0000
3391	GLOBAL	Cartesian	55.0000	51.2500	2.0000
3392	GLOBAL	Cartesian	55.0000	53.7500	2.0000
3393	GLOBAL	Cartesian	55.0000	56.2500	2.0000
3394	GLOBAL	Cartesian	57.7500	60.0000	2.0000
3395	GLOBAL	Cartesian	55.0000	58.7500	2.0000
3396	GLOBAL	Cartesian	52.2500	52.5000	2.0000
3397	GLOBAL	Cartesian	52.2500	55.0000	2.0000
3398	GLOBAL	Cartesian	52.2500	57.5000	2.0000
3399	GLOBAL	Cartesian	55.0000	61.7500	2.0000
3400	GLOBAL	Cartesian	52.2500	60.0000	2.0000
3401	GLOBAL	Cartesian	55.0000	64.2500	2.0000
3402	GLOBAL	Cartesian	52.2500	62.5000	2.0000
3403	GLOBAL	Cartesian	57.7500	62.5000	2.0000
3404	GLOBAL	Cartesian	52.2500	67.5000	2.0000
3405	GLOBAL	Cartesian	52.2500	65.0000	2.0000
3406	GLOBAL	Cartesian	55.0000	67.2500	2.0000
3407	GLOBAL	Cartesian	52.2500	70.0000	2.0000
3408	GLOBAL	Cartesian	49.5000	53.7500	2.0000
3409	GLOBAL	Cartesian	49.5000	56.2500	2.0000
3410	GLOBAL	Cartesian	49.5000	58.7500	2.0000
3411	GLOBAL	Cartesian	49.5000	61.2500	2.0000
3412	GLOBAL	Cartesian	49.5000	63.7500	2.0000
3413	GLOBAL	Cartesian	49.5000	66.2500	2.0000
3414	GLOBAL	Cartesian	49.5000	68.7500	2.0000
3415	GLOBAL	Cartesian	44.0000	58.7500	2.0000

Table 1: Joint Coordinates

Joint	CoordSys	CoordType	GlobalX	GlobalY	GlobalZ
			ft	ft	ft
3416	GLOBAL	Cartesian	41.2500	57.5000	2.0000
3417	GLOBAL	Cartesian	46.7500	57.5000	2.0000
3418	GLOBAL	Cartesian	44.0000	56.2500	2.0000
3419	GLOBAL	Cartesian	44.0000	61.2500	2.0000
3420	GLOBAL	Cartesian	41.2500	60.0000	2.0000
3421	GLOBAL	Cartesian	46.7500	60.0000	2.0000
3422	GLOBAL	Cartesian	44.0000	63.7500	2.0000
3423	GLOBAL	Cartesian	46.7500	62.5000	2.0000
3424	GLOBAL	Cartesian	44.0000	66.2500	2.0000
3425	GLOBAL	Cartesian	41.2500	65.0000	2.0000
3426	GLOBAL	Cartesian	46.7500	65.0000	2.0000
3427	GLOBAL	Cartesian	44.0000	68.7500	2.0000
3428	GLOBAL	Cartesian	46.7500	67.5000	2.0000
3429	GLOBAL	Cartesian	46.7500	70.0000	2.0000
3430	GLOBAL	Cartesian	41.2500	70.0000	2.0000
3431	GLOBAL	Cartesian	17.8750	47.5000	2.0000
3432	GLOBAL	Cartesian	26.0000	55.0000	2.0000
3433	GLOBAL	Cartesian	45.5000	55.0000	2.0000
3434	GLOBAL	Cartesian	44.0000	13.7500	2.0000
3435	GLOBAL	Cartesian	45.5000	13.7500	2.0000
3436	GLOBAL	Cartesian	6.8750	22.5000	2.0000
3437	GLOBAL	Cartesian	6.8750	57.5000	2.0000
3438	GLOBAL	Cartesian	5.5000	55.0000	2.0000
3439	GLOBAL	Cartesian	6.8750	12.5000	2.0000
3440	GLOBAL	Cartesian	5.5000	15.0000	2.0000
3441	GLOBAL	Cartesian	4.1250	17.5000	2.0000
3442	GLOBAL	Cartesian	5.5000	16.2500	2.0000
3443	GLOBAL	Cartesian	6.8750	28.7500	2.0000
3444	GLOBAL	Cartesian	6.8750	23.7500	2.0000
3445	GLOBAL	Cartesian	6.8750	41.2500	2.0000
3446	GLOBAL	Cartesian	7.0000	43.7500	2.0000
3447	GLOBAL	Cartesian	6.8750	46.2500	2.0000
3448	GLOBAL	Cartesian	6.8750	51.2500	2.0000
3449	GLOBAL	Cartesian	5.5000	53.7500	2.0000
3450	GLOBAL	Cartesian	6.8750	18.7500	2.0000
3451	GLOBAL	Cartesian	5.5000	20.0000	2.0000
3452	GLOBAL	Cartesian	4.1250	18.7500	2.0000
3453	GLOBAL	Cartesian	5.5000	21.2500	2.0000

Table 1: Joint Coordinates

Joint	CoordSys	CoordType	GlobalX	GlobalY	GlobalZ
			ft	ft	ft
3454	GLOBAL	Cartesian	5.5000	25.0000	2.0000
3455	GLOBAL	Cartesian	4.1250	23.7500	2.0000
3456	GLOBAL	Cartesian	5.5000	30.0000	2.0000
3457	GLOBAL	Cartesian	4.1250	28.7500	2.0000
3458	GLOBAL	Cartesian	4.1250	32.5000	2.0000
3459	GLOBAL	Cartesian	5.5000	31.2500	2.0000
3460	GLOBAL	Cartesian	5.5000	38.7500	2.0000
3461	GLOBAL	Cartesian	4.1250	37.5000	2.0000
3462	GLOBAL	Cartesian	4.1250	41.2500	2.0000
3463	GLOBAL	Cartesian	5.5000	40.0000	2.0000
3464	GLOBAL	Cartesian	5.5000	43.7500	2.0000
3465	GLOBAL	Cartesian	4.1250	42.5000	2.0000
3466	GLOBAL	Cartesian	4.1250	46.2500	2.0000
3467	GLOBAL	Cartesian	5.5000	45.0000	2.0000
3468	GLOBAL	Cartesian	5.5000	48.7500	2.0000
3469	GLOBAL	Cartesian	4.1250	47.5000	2.0000
3470	GLOBAL	Cartesian	4.1250	51.2500	2.0000
3471	GLOBAL	Cartesian	5.5000	50.0000	2.0000
3472	GLOBAL	Cartesian	4.1250	52.5000	2.0000
3473	GLOBAL	Cartesian	2.7500	48.7500	2.0000
3474	GLOBAL	Cartesian	2.7500	50.0000	2.0000
3475	GLOBAL	Cartesian	1.421E-14	50.0000	2.0000
3476	GLOBAL	Cartesian	4.1250	22.5000	2.0000
3477	GLOBAL	Cartesian	2.7500	21.2500	2.0000
3478	GLOBAL	Cartesian	4.1250	27.5000	2.0000
3479	GLOBAL	Cartesian	5.5000	26.2500	2.0000
3480	GLOBAL	Cartesian	2.7500	26.2500	2.0000
3481	GLOBAL	Cartesian	2.7500	25.0000	2.0000
3482	GLOBAL	Cartesian	1.3750	28.7500	2.0000
3483	GLOBAL	Cartesian	1.3750	27.5000	2.0000
3484	GLOBAL	Cartesian	1.3750	33.7500	2.0000
3485	GLOBAL	Cartesian	1.3750	32.5000	2.0000
3486	GLOBAL	Cartesian	4.1250	33.7500	2.0000
3487	GLOBAL	Cartesian	1.3750	37.5000	2.0000
3488	GLOBAL	Cartesian	1.3750	36.2500	2.0000
3489	GLOBAL	Cartesian	4.1250	36.2500	2.0000
3490	GLOBAL	Cartesian	1.3750	42.5000	2.0000
3491	GLOBAL	Cartesian	1.3750	41.2500	2.0000

Table 1: Joint Coordinates

Joint	CoordSys	CoordType	GlobalX	GlobalY	GlobalZ
			ft	ft	ft
3492	GLOBAL	Cartesian	1.3750	47.5000	2.0000
3493	GLOBAL	Cartesian	1.3750	46.2500	2.0000
3494	GLOBAL	Cartesian	1.421E-14	45.0000	2.0000
3495	GLOBAL	Cartesian	2.7500	45.0000	2.0000
3496	GLOBAL	Cartesian	1.5000	43.7500	2.0000
3497	GLOBAL	Cartesian	2.7500	43.7500	2.0000
3498	GLOBAL	Cartesian	2.7500	40.0000	2.0000
3499	GLOBAL	Cartesian	2.7500	38.7500	2.0000
3500	GLOBAL	Cartesian	1.421E-14	40.0000	2.0000
3501	GLOBAL	Cartesian	1.3750	23.7500	2.0000
3502	GLOBAL	Cartesian	1.3750	22.5000	2.0000
3503	GLOBAL	Cartesian	2.7500	20.0000	2.0000
3504	GLOBAL	Cartesian	2.7500	31.2500	2.0000
3505	GLOBAL	Cartesian	2.7500	30.0000	2.0000
3506	GLOBAL	Cartesian	2.7500	35.0000	2.0000
3507	GLOBAL	Cartesian	5.5000	35.0000	2.0000
3508	GLOBAL	Cartesian	0.0000	35.0000	2.0000
3509	GLOBAL	Cartesian	1.421E-14	30.0000	2.0000
3510	GLOBAL	Cartesian	0.0000	25.0000	2.0000
4099	GLOBAL	Cartesian	0.0000	20.0000	2.0000
4100	GLOBAL	Cartesian	71.5000	30.0000	2.0000
4101	GLOBAL	Cartesian	71.5000	35.0000	2.0000
4102	GLOBAL	Cartesian	71.5000	40.0000	2.0000
4103	GLOBAL	Cartesian	68.7500	26.2500	2.0000
4104	GLOBAL	Cartesian	68.7500	43.7500	2.0000
4105	GLOBAL	Cartesian	57.7500	26.2500	2.0000
4106	GLOBAL	Cartesian	57.7500	43.7500	2.0000
4107	GLOBAL	Cartesian	6.8750	33.7500	2.0000
4108	GLOBAL	Cartesian	60.5000	27.5000	2.0000
4109	GLOBAL	Cartesian	61.6250	26.2500	8.0000
4110	GLOBAL	Cartesian	61.6250	27.5000	8.0000
4111	GLOBAL	Cartesian	57.7500	28.7500	2.0000
4112	GLOBAL	Cartesian	61.6250	28.7500	8.0000
4113	GLOBAL	Cartesian	60.5000	30.0000	2.0000
4114	GLOBAL	Cartesian	61.6250	30.0000	8.0000
4115	GLOBAL	Cartesian	57.7500	31.2500	2.0000
4116	GLOBAL	Cartesian	61.6250	31.2500	8.0000
4117	GLOBAL	Cartesian	60.5000	32.5000	2.0000

Table 1: Joint Coordinates

Joint	CoordSys	CoordType	GlobalX	GlobalY	GlobalZ
			ft	ft	ft
4118	GLOBAL	Cartesian	61.6250	32.5000	8.0000
4119	GLOBAL	Cartesian	57.7500	33.7500	2.0000
4120	GLOBAL	Cartesian	61.6250	33.7500	8.0000
4121	GLOBAL	Cartesian	60.5000	35.0000	2.0000
4122	GLOBAL	Cartesian	61.6250	35.0000	8.0000
4123	GLOBAL	Cartesian	57.7500	36.2500	2.0000
4124	GLOBAL	Cartesian	61.6250	36.2500	8.0000
4125	GLOBAL	Cartesian	60.5000	37.5000	2.0000
4126	GLOBAL	Cartesian	61.6250	37.5000	8.0000
4127	GLOBAL	Cartesian	57.7500	38.7500	2.0000
4128	GLOBAL	Cartesian	61.6250	38.7500	8.0000
4129	GLOBAL	Cartesian	60.5000	40.0000	2.0000
4130	GLOBAL	Cartesian	61.6250	40.0000	8.0000
4131	GLOBAL	Cartesian	57.7500	41.2500	2.0000
4132	GLOBAL	Cartesian	61.6250	41.2500	8.0000
4133	GLOBAL	Cartesian	60.5000	42.5000	2.0000
4134	GLOBAL	Cartesian	61.6250	42.5000	8.0000
4135	GLOBAL	Cartesian	61.6250	43.7500	8.0000
4136	GLOBAL	Cartesian	63.2500	26.2500	2.0000
4137	GLOBAL	Cartesian	64.6250	26.2500	8.0000
4138	GLOBAL	Cartesian	64.6250	27.5000	8.0000
4139	GLOBAL	Cartesian	63.2500	28.7500	2.0000
4140	GLOBAL	Cartesian	64.6250	28.7500	8.0000
4141	GLOBAL	Cartesian	64.6250	30.0000	8.0000
4142	GLOBAL	Cartesian	63.2500	31.2500	2.0000
4143	GLOBAL	Cartesian	64.6250	31.2500	8.0000
4144	GLOBAL	Cartesian	64.6250	32.5000	8.0000
4145	GLOBAL	Cartesian	63.2500	33.7500	2.0000
4146	GLOBAL	Cartesian	64.6250	33.7500	8.0000
4147	GLOBAL	Cartesian	64.6250	35.0000	8.0000
4148	GLOBAL	Cartesian	63.2500	36.2500	2.0000
4149	GLOBAL	Cartesian	64.6250	36.2500	8.0000
4150	GLOBAL	Cartesian	64.6250	37.5000	8.0000
4151	GLOBAL	Cartesian	63.2500	38.7500	2.0000
4152	GLOBAL	Cartesian	64.6250	38.7500	8.0000
4153	GLOBAL	Cartesian	64.6250	40.0000	8.0000
4154	GLOBAL	Cartesian	63.2500	41.2500	2.0000
4155	GLOBAL	Cartesian	64.6250	41.2500	8.0000

Table 1: Joint Coordinates

Joint	CoordSys	CoordType	GlobalX	GlobalY	GlobalZ
			ft	ft	ft
4156	GLOBAL	Cartesian	64.6250	42.5000	8.0000
4157	GLOBAL	Cartesian	63.2500	43.7500	2.0000
4158	GLOBAL	Cartesian	64.6250	43.7500	8.0000
4159	GLOBAL	Cartesian	66.0000	27.5000	2.0000
4160	GLOBAL	Cartesian	66.0000	30.0000	2.0000
4161	GLOBAL	Cartesian	66.0000	32.5000	2.0000
4162	GLOBAL	Cartesian	66.0000	35.0000	2.0000
4163	GLOBAL	Cartesian	66.0000	37.5000	2.0000
4164	GLOBAL	Cartesian	66.0000	40.0000	2.0000
4165	GLOBAL	Cartesian	66.0000	42.5000	2.0000
4166	GLOBAL	Cartesian	67.6250	26.2500	8.0000
4167	GLOBAL	Cartesian	67.6250	27.5000	8.0000
4168	GLOBAL	Cartesian	68.7500	28.7500	2.0000
4169	GLOBAL	Cartesian	67.6250	28.7500	8.0000
4170	GLOBAL	Cartesian	67.6250	30.0000	8.0000
4171	GLOBAL	Cartesian	68.7500	31.2500	2.0000
4172	GLOBAL	Cartesian	67.6250	31.2500	8.0000
4173	GLOBAL	Cartesian	67.6250	32.5000	8.0000
4174	GLOBAL	Cartesian	68.7500	33.7500	2.0000
4175	GLOBAL	Cartesian	67.6250	33.7500	8.0000
4176	GLOBAL	Cartesian	67.6250	35.0000	8.0000
4177	GLOBAL	Cartesian	68.7500	36.2500	2.0000
4178	GLOBAL	Cartesian	67.6250	36.2500	8.0000
4179	GLOBAL	Cartesian	67.6250	37.5000	8.0000
4180	GLOBAL	Cartesian	68.7500	38.7500	2.0000
4181	GLOBAL	Cartesian	67.6250	38.7500	8.0000
4182	GLOBAL	Cartesian	67.6250	40.0000	8.0000
4183	GLOBAL	Cartesian	67.6250	41.2500	8.0000
4184	GLOBAL	Cartesian	67.6250	42.5000	8.0000
4185	GLOBAL	Cartesian	67.6250	43.7500	8.0000
4186	GLOBAL	Cartesian	71.5000	27.5000	2.0000
4187	GLOBAL	Cartesian	71.5000	32.5000	2.0000
4188	GLOBAL	Cartesian	71.5000	37.5000	2.0000
4189	GLOBAL	Cartesian	71.5000	42.5000	2.0000
4190	GLOBAL	Cartesian	27.5000	12.5000	2.0000
4191	GLOBAL	Cartesian	26.1250	10.0000	2.0000
4192	GLOBAL	Cartesian	27.5000	9.2400	8.0000
4193	GLOBAL	Cartesian	26.1250	9.2400	8.0000

Table 1: Joint Coordinates

Joint	CoordSys	CoordType	GlobalX ft	GlobalY ft	GlobalZ ft
4194	GLOBAL	Cartesian	28.8750	10.0000	2.0000
4195	GLOBAL	Cartesian	28.8750	9.2400	8.0000
4196	GLOBAL	Cartesian	30.2500	12.5000	2.0000
4197	GLOBAL	Cartesian	30.2500	9.2400	8.0000
4198	GLOBAL	Cartesian	31.6250	10.0000	2.0000
4199	GLOBAL	Cartesian	31.6250	9.2400	8.0000
4200	GLOBAL	Cartesian	33.0000	12.5000	2.0000
4201	GLOBAL	Cartesian	33.0000	9.2400	8.0000
4202	GLOBAL	Cartesian	27.5000	7.5000	2.0000
4203	GLOBAL	Cartesian	27.5000	6.2500	8.0000
4204	GLOBAL	Cartesian	26.1250	6.2500	8.0000
4205	GLOBAL	Cartesian	28.8750	6.2500	8.0000
4206	GLOBAL	Cartesian	26.1250	5.0000	2.0000
4207	GLOBAL	Cartesian	28.8750	5.0000	2.0000
4208	GLOBAL	Cartesian	30.2500	7.5000	2.0000
4209	GLOBAL	Cartesian	30.2500	6.2500	8.0000
4210	GLOBAL	Cartesian	27.5000	2.5000	2.0000
4211	GLOBAL	Cartesian	27.5000	3.2400	8.0000
4212	GLOBAL	Cartesian	26.1250	3.2400	8.0000
4213	GLOBAL	Cartesian	28.8750	3.2400	8.0000
4214	GLOBAL	Cartesian	26.1250	-4.967E-15	2.0000
4215	GLOBAL	Cartesian	28.8750	-5.136E-15	2.0000
4216	GLOBAL	Cartesian	30.2500	2.5000	2.0000
4217	GLOBAL	Cartesian	30.2500	3.2400	8.0000
4218	GLOBAL	Cartesian	31.6250	6.2500	8.0000
4219	GLOBAL	Cartesian	31.6250	5.0000	2.0000
4220	GLOBAL	Cartesian	31.6250	3.2400	8.0000
4221	GLOBAL	Cartesian	31.6250	2.273E-15	2.0000
4222	GLOBAL	Cartesian	33.0000	7.5000	2.0000
4223	GLOBAL	Cartesian	33.0000	6.2500	8.0000
4224	GLOBAL	Cartesian	33.0000	2.5000	2.0000
4225	GLOBAL	Cartesian	33.0000	3.2400	8.0000
4226	GLOBAL	Cartesian	35.7500	10.0000	2.0000
4227	GLOBAL	Cartesian	35.7500	9.2400	8.0000
4228	GLOBAL	Cartesian	35.7500	6.2500	8.0000
4229	GLOBAL	Cartesian	35.7500	5.0000	2.0000
4230	GLOBAL	Cartesian	35.7500	3.2400	8.0000

Table 1: Joint Coordinates

Joint	CoordSys	CoordType	GlobalX	GlobalY	GlobalZ
			ft	ft	ft
4231	GLOBAL	Cartesian	35.7500	2.021E-15	2.0000
4232	GLOBAL	Cartesian	38.5000	12.5000	2.0000
4233	GLOBAL	Cartesian	38.5000	9.2400	8.0000
4234	GLOBAL	Cartesian	38.5000	7.5000	2.0000
4235	GLOBAL	Cartesian	38.5000	6.2500	8.0000
4236	GLOBAL	Cartesian	38.5000	2.5000	2.0000
4237	GLOBAL	Cartesian	38.5000	3.2400	8.0000
4238	GLOBAL	Cartesian	41.2500	9.2400	8.0000
4239	GLOBAL	Cartesian	41.2500	6.2500	8.0000
4240	GLOBAL	Cartesian	41.2500	3.2400	8.0000
4241	GLOBAL	Cartesian	44.0000	10.0000	2.0000
4242	GLOBAL	Cartesian	44.0000	12.4822	2.0000
4243	GLOBAL	Cartesian	44.0000	9.2400	8.0000
4244	GLOBAL	Cartesian	44.0000	7.5000	2.0000
4245	GLOBAL	Cartesian	44.0000	6.2500	8.0000
4246	GLOBAL	Cartesian	44.0000	5.0000	2.0000
4247	GLOBAL	Cartesian	44.0000	2.5000	2.0000
4248	GLOBAL	Cartesian	44.0000	3.2400	8.0000
4249	GLOBAL	Cartesian	44.0000	1.515E-15	2.0000
4250	GLOBAL	Cartesian	45.5000	1.424E-15	2.0000
4251	GLOBAL	Cartesian	45.5000	2.5000	2.0000
4252	GLOBAL	Cartesian	45.5000	3.2400	8.0000
4253	GLOBAL	Cartesian	45.5000	5.0000	2.0000
4254	GLOBAL	Cartesian	45.5000	6.2500	8.0000
4255	GLOBAL	Cartesian	45.5000	7.5000	2.0000
4256	GLOBAL	Cartesian	45.5000	10.0000	2.0000
4257	GLOBAL	Cartesian	45.5000	9.2400	8.0000
4258	GLOBAL	Cartesian	45.5000	12.4822	2.0000
4259	GLOBAL	Cartesian	2.7500	27.5000	2.0000
4260	GLOBAL	Cartesian	0.0000	26.2500	2.0000
4261	GLOBAL	Cartesian	0.0000	27.5000	2.0000
4262	GLOBAL	Cartesian	3.8750	26.2500	8.0000
4263	GLOBAL	Cartesian	3.8750	27.5000	8.0000
4264	GLOBAL	Cartesian	2.7500	28.7500	2.0000
4265	GLOBAL	Cartesian	-1.421E-14	28.7500	2.0000
4266	GLOBAL	Cartesian	3.8750	28.7500	8.0000
4267	GLOBAL	Cartesian	3.8750	30.0000	8.0000
4268	GLOBAL	Cartesian	0.0000	31.2500	2.0000

Table 1: Joint Coordinates

Joint	CoordSys	CoordType	GlobalX	GlobalY	GlobalZ
			ft	ft	ft
4269	GLOBAL	Cartesian	3.8750	31.2500	8.0000
4270	GLOBAL	Cartesian	2.7500	32.5000	2.0000
4271	GLOBAL	Cartesian	0.0000	32.5000	2.0000
4272	GLOBAL	Cartesian	3.8750	32.5000	8.0000
4273	GLOBAL	Cartesian	2.7500	33.7500	2.0000
4274	GLOBAL	Cartesian	1.421E-14	33.7500	2.0000
4275	GLOBAL	Cartesian	3.8750	33.7500	8.0000
4276	GLOBAL	Cartesian	3.8750	35.0000	8.0000
4277	GLOBAL	Cartesian	2.7500	36.2500	2.0000
4278	GLOBAL	Cartesian	0.0000	36.2500	2.0000
4279	GLOBAL	Cartesian	3.8750	36.2500	8.0000
4280	GLOBAL	Cartesian	2.7500	37.5000	2.0000
4281	GLOBAL	Cartesian	0.0000	37.5000	2.0000
4282	GLOBAL	Cartesian	3.8750	37.5000	8.0000
4283	GLOBAL	Cartesian	1.421E-14	38.7500	2.0000
4284	GLOBAL	Cartesian	3.8750	38.7500	8.0000
4285	GLOBAL	Cartesian	3.8750	40.0000	8.0000
4286	GLOBAL	Cartesian	2.7500	41.2500	2.0000
4287	GLOBAL	Cartesian	0.0000	41.2500	2.0000
4288	GLOBAL	Cartesian	3.8750	41.2500	8.0000
4289	GLOBAL	Cartesian	2.7500	42.5000	2.0000
4290	GLOBAL	Cartesian	0.0000	42.5000	2.0000
4291	GLOBAL	Cartesian	3.8750	42.5000	8.0000
4292	GLOBAL	Cartesian	1.421E-14	43.7500	2.0000
4293	GLOBAL	Cartesian	3.8750	43.7500	8.0000
4294	GLOBAL	Cartesian	5.5000	27.5000	2.0000
4295	GLOBAL	Cartesian	6.8750	26.2500	8.0000
4296	GLOBAL	Cartesian	6.8750	27.5000	8.0000
4297	GLOBAL	Cartesian	5.5000	28.7500	2.0000
4298	GLOBAL	Cartesian	6.8750	28.7500	8.0000
4299	GLOBAL	Cartesian	6.8750	30.0000	8.0000
4300	GLOBAL	Cartesian	6.8750	31.2500	8.0000
4301	GLOBAL	Cartesian	5.5000	32.5000	2.0000
4302	GLOBAL	Cartesian	6.8750	32.5000	8.0000
4303	GLOBAL	Cartesian	5.5000	33.7500	2.0000
4304	GLOBAL	Cartesian	6.8750	33.7500	8.0000
4305	GLOBAL	Cartesian	6.8750	35.0000	8.0000
4306	GLOBAL	Cartesian	5.5000	36.2500	2.0000

Table 1: Joint Coordinates

Joint	CoordSys	CoordType	GlobalX	GlobalY	GlobalZ
			ft	ft	ft
4307	GLOBAL	Cartesian	6.8750	36.2500	8.0000
4308	GLOBAL	Cartesian	5.5000	37.5000	2.0000
4309	GLOBAL	Cartesian	6.8750	37.5000	8.0000
4310	GLOBAL	Cartesian	6.8750	38.7500	8.0000
4311	GLOBAL	Cartesian	6.8750	40.0000	8.0000
4312	GLOBAL	Cartesian	5.5000	41.2500	2.0000
4313	GLOBAL	Cartesian	6.8750	41.2500	8.0000
4314	GLOBAL	Cartesian	5.5000	42.5000	2.0000
4315	GLOBAL	Cartesian	6.8750	42.5000	8.0000
4316	GLOBAL	Cartesian	6.8750	43.7500	8.0000
4317	GLOBAL	Cartesian	8.2500	26.2500	2.0000
4318	GLOBAL	Cartesian	8.2500	27.5000	2.0000
4319	GLOBAL	Cartesian	8.2500	28.7500	2.0000
4320	GLOBAL	Cartesian	8.2500	31.2500	2.0000
4321	GLOBAL	Cartesian	8.2500	32.5000	2.0000
4322	GLOBAL	Cartesian	8.2500	33.7500	2.0000
4323	GLOBAL	Cartesian	8.2500	36.2500	2.0000
4324	GLOBAL	Cartesian	8.2500	37.5000	2.0000
4325	GLOBAL	Cartesian	8.2500	38.7500	2.0000
4326	GLOBAL	Cartesian	8.2500	41.2500	2.0000
4327	GLOBAL	Cartesian	8.2500	42.5000	2.0000
4328	GLOBAL	Cartesian	8.2500	43.7500	2.0000
4329	GLOBAL	Cartesian	11.0000	26.2500	2.0000
4330	GLOBAL	Cartesian	11.0000	27.5000	2.0000
4331	GLOBAL	Cartesian	9.8750	26.2500	8.0000
4332	GLOBAL	Cartesian	9.8750	27.5000	8.0000
4333	GLOBAL	Cartesian	11.0000	28.7500	2.0000
4334	GLOBAL	Cartesian	9.8750	28.7500	8.0000
4335	GLOBAL	Cartesian	9.8750	30.0000	8.0000
4336	GLOBAL	Cartesian	11.0000	31.2500	2.0000
4337	GLOBAL	Cartesian	9.8750	31.2500	8.0000
4338	GLOBAL	Cartesian	11.0000	32.5000	2.0000
4339	GLOBAL	Cartesian	9.8750	32.5000	8.0000
4340	GLOBAL	Cartesian	11.0000	33.7500	2.0000
4341	GLOBAL	Cartesian	9.8750	33.7500	8.0000
4342	GLOBAL	Cartesian	9.8750	35.0000	8.0000
4343	GLOBAL	Cartesian	11.0000	36.2500	2.0000
4344	GLOBAL	Cartesian	9.8750	36.2500	8.0000

Table 1: Joint Coordinates

Joint	CoordSys	CoordType	GlobalX	GlobalY	GlobalZ
			ft	ft	ft
4345	GLOBAL	Cartesian	11.0000	37.5000	2.0000
4346	GLOBAL	Cartesian	9.8750	37.5000	8.0000
4347	GLOBAL	Cartesian	11.0000	38.7500	2.0000
4348	GLOBAL	Cartesian	9.8750	38.7500	8.0000
4349	GLOBAL	Cartesian	9.8750	40.0000	8.0000
4350	GLOBAL	Cartesian	11.0000	41.2500	2.0000
4351	GLOBAL	Cartesian	9.8750	41.2500	8.0000
4352	GLOBAL	Cartesian	11.0000	42.5000	2.0000
4353	GLOBAL	Cartesian	9.8750	42.5000	8.0000
4354	GLOBAL	Cartesian	11.0000	43.7500	2.0000
4355	GLOBAL	Cartesian	9.8750	43.7500	8.0000
4356	GLOBAL	Cartesian	13.7500	26.2500	2.0000
4357	GLOBAL	Cartesian	13.7500	27.5000	2.0000
4358	GLOBAL	Cartesian	13.7500	28.7500	2.0000
4359	GLOBAL	Cartesian	13.7500	31.2500	2.0000
4360	GLOBAL	Cartesian	13.7500	32.5000	2.0000
4361	GLOBAL	Cartesian	13.7500	33.7500	2.0000
4362	GLOBAL	Cartesian	13.7500	36.2500	2.0000
4363	GLOBAL	Cartesian	13.7500	37.5000	2.0000
4364	GLOBAL	Cartesian	13.7500	38.7500	2.0000
4365	GLOBAL	Cartesian	13.7500	41.2500	2.0000
4366	GLOBAL	Cartesian	13.7500	42.5000	2.0000
4367	GLOBAL	Cartesian	13.7500	43.7500	2.0000
4368	GLOBAL	Cartesian	27.5000	67.5000	2.0000
4369	GLOBAL	Cartesian	26.1250	70.0000	2.0000
4370	GLOBAL	Cartesian	27.5000	66.7400	8.0000
4371	GLOBAL	Cartesian	26.1250	66.7400	8.0000
4372	GLOBAL	Cartesian	28.8750	70.0000	2.0000
4373	GLOBAL	Cartesian	28.8750	66.7400	8.0000
4374	GLOBAL	Cartesian	30.2500	67.5000	2.0000
4375	GLOBAL	Cartesian	30.2500	66.7400	8.0000
4376	GLOBAL	Cartesian	31.6250	70.0000	2.0000
4377	GLOBAL	Cartesian	31.6250	66.7400	8.0000
4378	GLOBAL	Cartesian	33.0000	67.5000	2.0000
4379	GLOBAL	Cartesian	33.0000	66.7400	8.0000
4380	GLOBAL	Cartesian	26.1250	65.0000	2.0000
4381	GLOBAL	Cartesian	27.5000	63.7500	8.0000
4382	GLOBAL	Cartesian	26.1250	63.7500	8.0000

Table 1: Joint Coordinates

Joint	CoordSys	CoordType	GlobalX	GlobalY	GlobalZ
			ft	ft	ft
4383	GLOBAL	Cartesian	28.8750	65.0000	2.0000
4384	GLOBAL	Cartesian	28.8750	63.7500	8.0000
4385	GLOBAL	Cartesian	27.5000	62.5000	2.0000
4386	GLOBAL	Cartesian	30.2500	63.7500	8.0000
4387	GLOBAL	Cartesian	30.2500	62.5000	2.0000
4388	GLOBAL	Cartesian	26.1250	60.0000	2.0000
4389	GLOBAL	Cartesian	27.5000	60.7400	8.0000
4390	GLOBAL	Cartesian	24.7500	60.7400	8.0000
4391	GLOBAL	Cartesian	28.8750	60.0000	2.0000
4392	GLOBAL	Cartesian	28.8750	60.7400	8.0000
4393	GLOBAL	Cartesian	27.5000	57.5000	2.0000
4394	GLOBAL	Cartesian	30.2500	60.7400	8.0000
4395	GLOBAL	Cartesian	30.2500	57.5000	2.0000
4396	GLOBAL	Cartesian	31.6250	65.0000	2.0000
4397	GLOBAL	Cartesian	31.6250	63.7500	8.0000
4398	GLOBAL	Cartesian	31.6250	60.0000	2.0000
4399	GLOBAL	Cartesian	31.6250	60.7400	8.0000
4400	GLOBAL	Cartesian	33.0000	63.7500	8.0000
4401	GLOBAL	Cartesian	33.0000	62.5000	2.0000
4402	GLOBAL	Cartesian	33.0000	60.7400	8.0000
4403	GLOBAL	Cartesian	33.0000	57.5000	2.0000
4404	GLOBAL	Cartesian	35.7500	70.0000	2.0000
4405	GLOBAL	Cartesian	35.7500	66.7400	8.0000
4406	GLOBAL	Cartesian	35.7500	65.0000	2.0000
4407	GLOBAL	Cartesian	35.7500	63.7500	8.0000
4408	GLOBAL	Cartesian	35.7500	60.0000	2.0000
4409	GLOBAL	Cartesian	35.7500	60.7400	8.0000
4410	GLOBAL	Cartesian	38.5000	67.5000	2.0000
4411	GLOBAL	Cartesian	38.5000	66.7400	8.0000
4412	GLOBAL	Cartesian	38.5000	63.7500	8.0000
4413	GLOBAL	Cartesian	38.5000	62.5000	2.0000
4414	GLOBAL	Cartesian	38.5000	60.7400	8.0000
4415	GLOBAL	Cartesian	38.5000	57.5000	2.0000
4416	GLOBAL	Cartesian	41.2500	66.7400	8.0000
4417	GLOBAL	Cartesian	41.2500	63.7500	8.0000
4418	GLOBAL	Cartesian	41.2500	60.7400	8.0000
4419	GLOBAL	Cartesian	44.0000	67.5000	2.0000
4420	GLOBAL	Cartesian	44.0000	69.9822	2.0000

Table 1: Joint Coordinates

Joint	CoordSys	CoordType	GlobalX	GlobalY	GlobalZ
			ft	ft	ft
4421	GLOBAL	Cartesian	44.0000	66.7400	8.0000
4422	GLOBAL	Cartesian	44.0000	65.0000	2.0000
4423	GLOBAL	Cartesian	44.0000	63.7500	8.0000
4424	GLOBAL	Cartesian	44.0000	62.5000	2.0000
4425	GLOBAL	Cartesian	44.0000	60.0000	2.0000
4426	GLOBAL	Cartesian	44.0000	60.7400	8.0000
4427	GLOBAL	Cartesian	44.0000	57.5000	2.0000
4428	GLOBAL	Cartesian	45.5000	57.5000	2.0000
4429	GLOBAL	Cartesian	45.5000	60.0000	2.0000
4430	GLOBAL	Cartesian	45.5000	60.7400	8.0000
4431	GLOBAL	Cartesian	45.5000	62.5000	2.0000
4432	GLOBAL	Cartesian	45.5000	63.7500	8.0000
4433	GLOBAL	Cartesian	45.5000	65.0000	2.0000
4434	GLOBAL	Cartesian	45.5000	67.5000	2.0000
4435	GLOBAL	Cartesian	45.5000	66.7400	8.0000
4436	GLOBAL	Cartesian	46.7500	3.2400	8.0000
4438	GLOBAL	Cartesian	47.7050	9.2500	8.0000
4439	GLOBAL	Cartesian	50.6140	3.2400	8.0000
4440	GLOBAL	Cartesian	52.2500	7.5000	8.0000
4441	GLOBAL	Cartesian	52.2500	10.0000	8.0000
4442	GLOBAL	Cartesian	52.2500	12.5000	8.0000
4443	GLOBAL	Cartesian	60.5000	25.0000	2.0000
4444	GLOBAL	Cartesian	61.6250	24.1490	8.0000
4446	GLOBAL	Cartesian	66.0000	25.0000	2.0000
4447	GLOBAL	Cartesian	67.6250	24.1490	8.0000
4448	GLOBAL	Cartesian	71.5000	25.0000	2.0000
4449	GLOBAL	Cartesian	57.7500	21.2500	2.0000
4450	GLOBAL	Cartesian	60.5000	21.2500	8.0000
4451	GLOBAL	Cartesian	58.4330	20.7410	8.0000
4452	GLOBAL	Cartesian	63.2500	21.2500	2.0000
4453	GLOBAL	Cartesian	63.2500	21.2500	8.0000
4454	GLOBAL	Cartesian	66.0000	21.2500	8.0000
4455	GLOBAL	Cartesian	68.7500	21.2500	2.0000
4456	GLOBAL	Cartesian	67.6250	21.6650	8.0000
4457	GLOBAL	Cartesian	55.0000	13.7500	8.0000
4458	GLOBAL	Cartesian	55.0000	11.2500	8.0000
4459	GLOBAL	Cartesian	55.0000	8.2500	8.0000
4460	GLOBAL	Cartesian	52.6930	14.5920	8.0000

Table 1: Joint Coordinates

Joint	CoordSys	CoordType	GlobalX	GlobalY	GlobalZ
			ft	ft	ft
4461	GLOBAL	Cartesian	55.0000	16.2500	8.0000
4462	GLOBAL	Cartesian	57.2680	10.3790	8.0000
4463	GLOBAL	Cartesian	57.7500	12.5000	8.0000
4464	GLOBAL	Cartesian	57.7500	15.0000	8.0000
4465	GLOBAL	Cartesian	57.7500	17.5000	8.0000
4466	GLOBAL	Cartesian	55.8740	18.0000	8.0000
4467	GLOBAL	Cartesian	57.7500	20.0000	8.0000
4468	GLOBAL	Cartesian	60.5000	13.7500	8.0000
4469	GLOBAL	Cartesian	60.5000	16.2500	8.0000
4470	GLOBAL	Cartesian	60.5000	18.7500	8.0000
4471	GLOBAL	Cartesian	63.2500	20.0000	8.0000
4472	GLOBAL	Cartesian	63.2500	17.5000	8.0000
4473	GLOBAL	Cartesian	65.3980	19.2180	8.0000
4474	GLOBAL	Cartesian	62.3100	15.8580	8.0000
4475	GLOBAL	Cartesian	66.7410	20.6800	8.0000
4476	GLOBAL	Cartesian	71.5000	20.0000	2.0000
4477	GLOBAL	Cartesian	57.7584	5.8428	2.0000
4478	GLOBAL	Cartesian	55.9729	22.5767	2.0000
4479	GLOBAL	Cartesian	59.9520	22.3680	8.0000
4480	GLOBAL	Cartesian	3.8750	25.0000	8.0000
4481	GLOBAL	Cartesian	8.2500	25.0000	8.0000
4482	GLOBAL	Cartesian	5.5000	25.0000	8.0000
4483	GLOBAL	Cartesian	9.8750	25.0000	8.0000
4484	GLOBAL	Cartesian	13.7500	25.7729	2.0000
4485	GLOBAL	Cartesian	11.8100	22.5000	8.0000
4486	GLOBAL	Cartesian	9.6250	22.5000	8.0000
4488	GLOBAL	Cartesian	4.1250	22.5000	8.0000
4489	GLOBAL	Cartesian	13.7500	20.0000	8.0000
4490	GLOBAL	Cartesian	14.1070	20.0000	8.0000
4491	GLOBAL	Cartesian	11.0000	20.0000	8.0000
4492	GLOBAL	Cartesian	8.2500	20.0000	8.0000
4493	GLOBAL	Cartesian	5.8770	20.0000	8.0000
4494	GLOBAL	Cartesian	0.0000	20.5248	2.0000
4495	GLOBAL	Cartesian	9.6250	17.5000	8.0000
4496	GLOBAL	Cartesian	12.3750	17.5000	8.0000
4497	GLOBAL	Cartesian	15.1250	17.5000	8.0000
4498	GLOBAL	Cartesian	16.3940	17.5000	8.0000
4499	GLOBAL	Cartesian	8.1300	17.5000	8.0000

Table 1: Joint Coordinates

Joint	CoordSys	CoordType	GlobalX	GlobalY	GlobalZ
			ft	ft	ft
4500	GLOBAL	Cartesian	10.4440	15.0000	8.0000
4501	GLOBAL	Cartesian	11.0000	15.0000	8.0000
4502	GLOBAL	Cartesian	13.7500	15.0000	8.0000
4503	GLOBAL	Cartesian	16.5000	15.0000	8.0000
4504	GLOBAL	Cartesian	18.7020	15.0000	8.0000
4505	GLOBAL	Cartesian	12.7280	12.5000	8.0000
4506	GLOBAL	Cartesian	15.1250	12.5000	8.0000
4507	GLOBAL	Cartesian	17.8750	12.5000	8.0000
4508	GLOBAL	Cartesian	20.6250	12.5000	8.0000
4509	GLOBAL	Cartesian	15.0000	10.0000	8.0000
4510	GLOBAL	Cartesian	16.5000	10.0000	8.0000
4511	GLOBAL	Cartesian	19.2500	10.0000	8.0000
4512	GLOBAL	Cartesian	22.0000	10.0000	8.0000
4513	GLOBAL	Cartesian	17.2950	7.5000	8.0000
4514	GLOBAL	Cartesian	17.8750	7.5000	8.0000
4515	GLOBAL	Cartesian	20.6250	7.5000	8.0000
4517	GLOBAL	Cartesian	20.9990	12.5000	8.0000
4518	GLOBAL	Cartesian	24.0550	9.1740	8.0000
4519	GLOBAL	Cartesian	19.5790	5.0000	8.0000
4520	GLOBAL	Cartesian	22.0000	5.0000	8.0000
4521	GLOBAL	Cartesian	24.7500	5.0000	8.0000
4522	GLOBAL	Cartesian	21.2000	3.2400	8.0000
4523	GLOBAL	Cartesian	23.3750	3.2400	8.0000
4524	GLOBAL	Cartesian	26.0000	5.0000	2.0000
4525	GLOBAL	Cartesian	26.0000	2.618E-15	2.0000
4526	GLOBAL	Cartesian	24.7500	3.2400	8.0000
4527	GLOBAL	Cartesian	26.0000	10.0000	2.0000
4528	GLOBAL	Cartesian	25.4375	12.5000	2.0000
4529	GLOBAL	Cartesian	19.8125	3.552E-15	2.0000
4530	GLOBAL	Cartesian	22.0000	3.2400	8.0000
4531	GLOBAL	Cartesian	15.0000	5.0000	2.0000
4532	GLOBAL	Cartesian	2.8747	17.5467	2.0000
4533	GLOBAL	Cartesian	7.7463	12.5000	2.0000
4534	GLOBAL	Cartesian	10.1595	10.0000	2.0000
4535	GLOBAL	Cartesian	16.6320	22.5000	2.0000
4536	GLOBAL	Cartesian	23.2361	15.0000	2.0000
4537	GLOBAL	Cartesian	4.1250	23.7500	8.0000
4538	GLOBAL	Cartesian	22.0000	66.7400	8.0000

Table 1: Joint Coordinates

Joint	CoordSys	CoordType	GlobalX	GlobalY	GlobalZ
			ft	ft	ft
4539	GLOBAL	Cartesian	23.3750	66.7400	8.0000
4540	GLOBAL	Cartesian	19.7344	70.0496	2.0000
4541	GLOBAL	Cartesian	21.2460	66.7400	8.0000
4543	GLOBAL	Cartesian	24.7500	63.7500	8.0000
4544	GLOBAL	Cartesian	23.3750	62.5000	8.0000
4545	GLOBAL	Cartesian	20.6250	62.5000	8.0000
4546	GLOBAL	Cartesian	22.0000	60.0000	8.0000
4547	GLOBAL	Cartesian	19.6750	65.0000	8.0000
4548	GLOBAL	Cartesian	20.2640	65.6630	8.0000
4549	GLOBAL	Cartesian	19.2500	70.0000	2.0000
4550	GLOBAL	Cartesian	17.8750	62.5000	8.0000
4551	GLOBAL	Cartesian	19.2500	60.0000	8.0000
4552	GLOBAL	Cartesian	20.6250	57.5000	8.0000
4553	GLOBAL	Cartesian	16.5000	60.0000	8.0000
4554	GLOBAL	Cartesian	17.8750	57.5000	8.0000
4555	GLOBAL	Cartesian	17.4530	62.5000	8.0000
4556	GLOBAL	Cartesian	15.2320	60.0000	8.0000
4557	GLOBAL	Cartesian	15.1250	57.5000	8.0000
4558	GLOBAL	Cartesian	13.0100	57.5000	8.0000
4559	GLOBAL	Cartesian	13.7500	55.0000	8.0000
4560	GLOBAL	Cartesian	16.5000	55.0000	8.0000
4561	GLOBAL	Cartesian	18.4240	55.0000	8.0000
4562	GLOBAL	Cartesian	16.0370	52.5000	8.0000
4563	GLOBAL	Cartesian	15.1250	52.5000	8.0000
4564	GLOBAL	Cartesian	11.0000	55.0000	8.0000
4565	GLOBAL	Cartesian	12.3750	52.5000	8.0000
4566	GLOBAL	Cartesian	13.7500	50.0000	8.0000
4567	GLOBAL	Cartesian	9.6250	52.5000	8.0000
4568	GLOBAL	Cartesian	11.0000	50.0000	8.0000
4569	GLOBAL	Cartesian	15.0000	65.0000	2.0000
4570	GLOBAL	Cartesian	11.2630	47.5000	8.0000
4571	GLOBAL	Cartesian	9.6250	47.5000	8.0000
4572	GLOBAL	Cartesian	8.2500	50.0000	8.0000
4573	GLOBAL	Cartesian	6.8750	47.5000	8.0000
4574	GLOBAL	Cartesian	8.5670	52.5000	8.0000
4575	GLOBAL	Cartesian	6.3460	50.0000	8.0000
4576	GLOBAL	Cartesian	3.8750	47.5000	8.0000
4577	GLOBAL	Cartesian	9.8750	45.0000	8.0000

Table 1: Joint Coordinates

Joint	CoordSys	CoordType	GlobalX	GlobalY	GlobalZ
			ft	ft	ft
4578	GLOBAL	Cartesian	3.8750	45.0000	8.0000
4579	GLOBAL	Cartesian	3.8750	46.2500	8.0000
4580	GLOBAL	Cartesian	5.5000	45.0000	8.0000
4582	GLOBAL	Cartesian	8.2500	45.0000	8.0000
4583	GLOBAL	Cartesian	8.2500	43.7500	8.0000
4584	GLOBAL	Cartesian	5.5000	43.7500	8.0000
4585	GLOBAL	Cartesian	9.6250	60.0000	2.0000
4586	GLOBAL	Cartesian	3.2497	53.3763	2.0000
4587	GLOBAL	Cartesian	46.7500	60.7400	8.0000
4588	GLOBAL	Cartesian	46.7500	62.5000	8.0000
4589	GLOBAL	Cartesian	46.7500	65.0000	8.0000
4590	GLOBAL	Cartesian	46.7500	66.7400	8.0000
4591	GLOBAL	Cartesian	45.5000	70.0000	2.0000
4592	GLOBAL	Cartesian	61.6250	45.5690	8.0000
4593	GLOBAL	Cartesian	63.2500	45.0000	8.0000
4594	GLOBAL	Cartesian	66.0000	46.2500	8.0000
4595	GLOBAL	Cartesian	67.6250	45.0000	8.0000
4596	GLOBAL	Cartesian	67.6250	46.2500	8.0000
4597	GLOBAL	Cartesian	59.2620	48.1870	8.0000
4598	GLOBAL	Cartesian	60.5000	48.7500	8.0000
4600	GLOBAL	Cartesian	66.0000	48.7500	8.0000
4601	GLOBAL	Cartesian	67.6250	47.5000	8.0000
4602	GLOBAL	Cartesian	57.7500	50.0000	8.0000
4603	GLOBAL	Cartesian	60.5000	51.2500	8.0000
4604	GLOBAL	Cartesian	63.2500	50.0000	8.0000
4605	GLOBAL	Cartesian	65.1020	50.8420	8.0000
4606	GLOBAL	Cartesian	66.6770	49.0580	8.0000
4607	GLOBAL	Cartesian	56.0570	51.7180	8.0000
4608	GLOBAL	Cartesian	57.7500	52.5000	8.0000
4609	GLOBAL	Cartesian	60.5000	53.7500	8.0000
4610	GLOBAL	Cartesian	51.2960	57.0660	8.0000
4611	GLOBAL	Cartesian	54.4820	53.5130	8.0000
4612	GLOBAL	Cartesian	52.8890	55.2910	8.0000
4613	GLOBAL	Cartesian	55.0000	53.7500	8.0000
4614	GLOBAL	Cartesian	57.7500	55.0000	8.0000
4615	GLOBAL	Cartesian	60.5000	56.2500	8.0000
4616	GLOBAL	Cartesian	55.0000	56.2500	8.0000
4617	GLOBAL	Cartesian	52.2500	57.5000	8.0000

Table 1: Joint Coordinates

Joint	CoordSys	CoordType	GlobalX	GlobalY	GlobalZ
			ft	ft	ft
4618	GLOBAL	Cartesian	49.7030	58.8420	8.0000
4619	GLOBAL	Cartesian	49.5000	61.2500	8.0000
4621	GLOBAL	Cartesian	49.5000	66.2500	8.0000
4622	GLOBAL	Cartesian	51.0320	66.7740	8.0000
4623	GLOBAL	Cartesian	52.2500	65.0000	8.0000
4624	GLOBAL	Cartesian	52.2500	62.5000	8.0000
4625	GLOBAL	Cartesian	52.2500	60.0000	8.0000
4626	GLOBAL	Cartesian	55.0000	58.7500	8.0000
4627	GLOBAL	Cartesian	55.0000	61.7500	8.0000
4628	GLOBAL	Cartesian	53.8870	63.5420	8.0000
4629	GLOBAL	Cartesian	57.2260	59.7620	8.0000
4630	GLOBAL	Cartesian	57.7500	57.5000	8.0000
4631	GLOBAL	Cartesian	58.8010	57.9780	8.0000
4632	GLOBAL	Cartesian	63.2500	52.5000	8.0000
4633	GLOBAL	Cartesian	61.8380	54.5390	8.0000
4634	GLOBAL	Cartesian	63.5270	52.6260	8.0000
4635	GLOBAL	Cartesian	52.5990	65.0000	8.0000
4636	GLOBAL	Cartesian	55.6500	61.5460	8.0000
4637	GLOBAL	Cartesian	57.7500	63.3333	2.0000
4638	GLOBAL	Cartesian	60.5034	59.9958	2.0000
4639	GLOBAL	Cartesian	64.1056	55.6295	2.0000
4640	GLOBAL	Cartesian	61.0625	26.2500	5.0000
4641	GLOBAL	Cartesian	61.0625	27.5000	5.0000
4642	GLOBAL	Cartesian	59.6875	26.2500	5.0000
4643	GLOBAL	Cartesian	59.6875	27.5000	5.0000
4644	GLOBAL	Cartesian	61.0625	28.7500	5.0000
4645	GLOBAL	Cartesian	59.6875	28.7500	5.0000
4646	GLOBAL	Cartesian	61.0625	30.0000	5.0000
4647	GLOBAL	Cartesian	59.6875	30.0000	5.0000
4648	GLOBAL	Cartesian	61.0625	31.2500	5.0000
4649	GLOBAL	Cartesian	59.6875	31.2500	5.0000
4650	GLOBAL	Cartesian	61.0625	32.5000	5.0000
4651	GLOBAL	Cartesian	59.6875	32.5000	5.0000
4652	GLOBAL	Cartesian	61.0625	33.7500	5.0000
4653	GLOBAL	Cartesian	59.6875	33.7500	5.0000
4654	GLOBAL	Cartesian	61.0625	35.0000	5.0000
4655	GLOBAL	Cartesian	59.6875	35.0000	5.0000
4656	GLOBAL	Cartesian	61.0625	36.2500	5.0000

Table 1: Joint Coordinates

Joint	CoordSys	CoordType	GlobalX	GlobalY	GlobalZ
			ft	ft	ft
4657	GLOBAL	Cartesian	59.6875	36.2500	5.0000
4658	GLOBAL	Cartesian	61.0625	37.5000	5.0000
4659	GLOBAL	Cartesian	59.6875	37.5000	5.0000
4660	GLOBAL	Cartesian	61.0625	38.7500	5.0000
4661	GLOBAL	Cartesian	59.6875	38.7500	5.0000
4662	GLOBAL	Cartesian	61.0625	40.0000	5.0000
4663	GLOBAL	Cartesian	59.6875	40.0000	5.0000
4664	GLOBAL	Cartesian	61.0625	41.2500	5.0000
4665	GLOBAL	Cartesian	59.6875	41.2500	5.0000
4666	GLOBAL	Cartesian	61.0625	42.5000	5.0000
4667	GLOBAL	Cartesian	59.6875	42.5000	5.0000
4668	GLOBAL	Cartesian	61.0625	43.7500	5.0000
4669	GLOBAL	Cartesian	59.6875	43.7500	5.0000
4670	GLOBAL	Cartesian	63.9375	26.2500	5.0000
4671	GLOBAL	Cartesian	63.9375	27.5000	5.0000
4672	GLOBAL	Cartesian	63.9375	28.7500	5.0000
4673	GLOBAL	Cartesian	63.9375	30.0000	5.0000
4674	GLOBAL	Cartesian	63.9375	31.2500	5.0000
4675	GLOBAL	Cartesian	63.9375	32.5000	5.0000
4676	GLOBAL	Cartesian	63.9375	33.7500	5.0000
4677	GLOBAL	Cartesian	63.9375	35.0000	5.0000
4678	GLOBAL	Cartesian	63.9375	36.2500	5.0000
4679	GLOBAL	Cartesian	63.9375	37.5000	5.0000
4680	GLOBAL	Cartesian	63.9375	38.7500	5.0000
4681	GLOBAL	Cartesian	63.9375	40.0000	5.0000
4682	GLOBAL	Cartesian	63.9375	41.2500	5.0000
4683	GLOBAL	Cartesian	63.9375	42.5000	5.0000
4684	GLOBAL	Cartesian	63.9375	43.7500	5.0000
4685	GLOBAL	Cartesian	65.3125	26.2500	5.0000
4686	GLOBAL	Cartesian	65.3125	27.5000	5.0000
4687	GLOBAL	Cartesian	65.3125	28.7500	5.0000
4688	GLOBAL	Cartesian	65.3125	30.0000	5.0000
4689	GLOBAL	Cartesian	65.3125	31.2500	5.0000
4690	GLOBAL	Cartesian	65.3125	32.5000	5.0000
4691	GLOBAL	Cartesian	65.3125	33.7500	5.0000
4692	GLOBAL	Cartesian	65.3125	35.0000	5.0000
4693	GLOBAL	Cartesian	65.3125	36.2500	5.0000
4694	GLOBAL	Cartesian	65.3125	37.5000	5.0000

Table 1: Joint Coordinates

Joint	CoordSys	CoordType	GlobalX	GlobalY	GlobalZ
			ft	ft	ft
4695	GLOBAL	Cartesian	65.3125	38.7500	5.0000
4696	GLOBAL	Cartesian	65.3125	40.0000	5.0000
4697	GLOBAL	Cartesian	65.3125	41.2500	5.0000
4698	GLOBAL	Cartesian	65.3125	42.5000	5.0000
4699	GLOBAL	Cartesian	65.3125	43.7500	5.0000
4700	GLOBAL	Cartesian	68.1875	26.2500	5.0000
4701	GLOBAL	Cartesian	68.1875	27.5000	5.0000
4702	GLOBAL	Cartesian	68.1875	28.7500	5.0000
4703	GLOBAL	Cartesian	68.1875	30.0000	5.0000
4704	GLOBAL	Cartesian	68.1875	31.2500	5.0000
4705	GLOBAL	Cartesian	68.1875	32.5000	5.0000
4706	GLOBAL	Cartesian	68.1875	33.7500	5.0000
4707	GLOBAL	Cartesian	68.1875	35.0000	5.0000
4708	GLOBAL	Cartesian	68.1875	36.2500	5.0000
4709	GLOBAL	Cartesian	68.1875	37.5000	5.0000
4710	GLOBAL	Cartesian	68.1875	38.7500	5.0000
4711	GLOBAL	Cartesian	68.1875	40.0000	5.0000
4712	GLOBAL	Cartesian	68.1875	41.2500	5.0000
4713	GLOBAL	Cartesian	68.1875	42.5000	5.0000
4714	GLOBAL	Cartesian	68.1875	43.7500	5.0000
4715	GLOBAL	Cartesian	69.5625	26.2500	5.0000
4716	GLOBAL	Cartesian	69.5625	27.5000	5.0000
4717	GLOBAL	Cartesian	69.5625	28.7500	5.0000
4718	GLOBAL	Cartesian	69.5625	30.0000	5.0000
4719	GLOBAL	Cartesian	69.5625	31.2500	5.0000
4720	GLOBAL	Cartesian	69.5625	32.5000	5.0000
4721	GLOBAL	Cartesian	69.5625	33.7500	5.0000
4722	GLOBAL	Cartesian	69.5625	35.0000	5.0000
4723	GLOBAL	Cartesian	69.5625	36.2500	5.0000
4724	GLOBAL	Cartesian	69.5625	37.5000	5.0000
4725	GLOBAL	Cartesian	69.5625	38.7500	5.0000
4726	GLOBAL	Cartesian	69.5625	40.0000	5.0000
4727	GLOBAL	Cartesian	69.5625	41.2500	5.0000
4728	GLOBAL	Cartesian	69.5625	42.5000	5.0000
4729	GLOBAL	Cartesian	69.5625	43.7500	5.0000
4730	GLOBAL	Cartesian	27.5000	9.6200	5.0000
4731	GLOBAL	Cartesian	27.5000	10.8700	5.0000
4732	GLOBAL	Cartesian	26.1250	9.6200	5.0000

Table 1: Joint Coordinates

Joint	CoordSys	CoordType	GlobalX	GlobalY	GlobalZ
			ft	ft	ft
4733	GLOBAL	Cartesian	26.1250	10.8700	5.0000
4734	GLOBAL	Cartesian	28.8750	9.6200	5.0000
4735	GLOBAL	Cartesian	28.8750	10.8700	5.0000
4736	GLOBAL	Cartesian	30.2500	9.6200	5.0000
4737	GLOBAL	Cartesian	30.2500	10.8700	5.0000
4738	GLOBAL	Cartesian	31.6250	9.6200	5.0000
4739	GLOBAL	Cartesian	31.6250	10.8700	5.0000
4740	GLOBAL	Cartesian	33.0000	9.6200	5.0000
4741	GLOBAL	Cartesian	33.0000	10.8700	5.0000
4742	GLOBAL	Cartesian	27.5000	6.8750	5.0000
4743	GLOBAL	Cartesian	26.1250	6.8750	5.0000
4744	GLOBAL	Cartesian	28.8750	6.8750	5.0000
4745	GLOBAL	Cartesian	27.5000	5.6250	5.0000
4746	GLOBAL	Cartesian	26.1250	5.6250	5.0000
4747	GLOBAL	Cartesian	28.8750	5.6250	5.0000
4748	GLOBAL	Cartesian	30.2500	6.8750	5.0000
4749	GLOBAL	Cartesian	30.2500	5.6250	5.0000
4750	GLOBAL	Cartesian	27.5000	2.8700	5.0000
4751	GLOBAL	Cartesian	26.1250	2.8700	5.0000
4752	GLOBAL	Cartesian	28.8750	2.8700	5.0000
4753	GLOBAL	Cartesian	27.5000	1.6200	5.0000
4754	GLOBAL	Cartesian	26.1250	1.6200	5.0000
4755	GLOBAL	Cartesian	28.8750	1.6200	5.0000
4756	GLOBAL	Cartesian	30.2500	2.8700	5.0000
4757	GLOBAL	Cartesian	30.2500	1.6200	5.0000
4758	GLOBAL	Cartesian	31.6250	6.8750	5.0000
4759	GLOBAL	Cartesian	31.6250	5.6250	5.0000
4760	GLOBAL	Cartesian	31.6250	2.8700	5.0000
4761	GLOBAL	Cartesian	31.6250	1.6200	5.0000
4762	GLOBAL	Cartesian	33.0000	6.8750	5.0000
4763	GLOBAL	Cartesian	33.0000	5.6250	5.0000
4764	GLOBAL	Cartesian	33.0000	2.8700	5.0000
4765	GLOBAL	Cartesian	33.0000	1.6200	5.0000
4766	GLOBAL	Cartesian	35.7500	9.6200	5.0000
4767	GLOBAL	Cartesian	35.7500	10.8700	5.0000
4768	GLOBAL	Cartesian	35.7500	6.8750	5.0000
4769	GLOBAL	Cartesian	35.7500	5.6250	5.0000
4770	GLOBAL	Cartesian	35.7500	2.8700	5.0000

Table 1: Joint Coordinates

Joint	CoordSys	CoordType	GlobalX	GlobalY	GlobalZ
			ft	ft	ft
4771	GLOBAL	Cartesian	35.7500	1.6200	5.0000
4772	GLOBAL	Cartesian	38.5000	9.6200	5.0000
4773	GLOBAL	Cartesian	38.5000	10.8700	5.0000
4774	GLOBAL	Cartesian	38.5000	6.8750	5.0000
4775	GLOBAL	Cartesian	38.5000	5.6250	5.0000
4776	GLOBAL	Cartesian	38.5000	2.8700	5.0000
4777	GLOBAL	Cartesian	38.5000	1.6200	5.0000
4778	GLOBAL	Cartesian	41.2500	9.6200	5.0000
4779	GLOBAL	Cartesian	41.2500	10.8700	5.0000
4780	GLOBAL	Cartesian	41.2500	6.8750	5.0000
4781	GLOBAL	Cartesian	41.2500	5.6250	5.0000
4782	GLOBAL	Cartesian	41.2500	2.8700	5.0000
4783	GLOBAL	Cartesian	41.2500	1.6200	5.0000
4784	GLOBAL	Cartesian	44.0000	9.6200	5.0000
4785	GLOBAL	Cartesian	44.0000	10.8611	5.0000
4786	GLOBAL	Cartesian	44.0000	6.8750	5.0000
4787	GLOBAL	Cartesian	44.0000	5.6250	5.0000
4788	GLOBAL	Cartesian	44.0000	2.8700	5.0000
4789	GLOBAL	Cartesian	44.0000	1.6200	5.0000
4790	GLOBAL	Cartesian	45.5000	1.6200	5.0000
4791	GLOBAL	Cartesian	45.5000	2.8700	5.0000
4792	GLOBAL	Cartesian	45.5000	5.6250	5.0000
4793	GLOBAL	Cartesian	45.5000	6.8750	5.0000
4794	GLOBAL	Cartesian	45.5000	9.6200	5.0000
4795	GLOBAL	Cartesian	45.5000	10.8611	5.0000
4796	GLOBAL	Cartesian	3.3125	26.2500	5.0000
4797	GLOBAL	Cartesian	3.3125	27.5000	5.0000
4798	GLOBAL	Cartesian	1.9375	26.2500	5.0000
4799	GLOBAL	Cartesian	1.9375	27.5000	5.0000
4800	GLOBAL	Cartesian	3.3125	28.7500	5.0000
4801	GLOBAL	Cartesian	1.9375	28.7500	5.0000
4802	GLOBAL	Cartesian	3.3125	30.0000	5.0000
4803	GLOBAL	Cartesian	1.9375	30.0000	5.0000
4804	GLOBAL	Cartesian	3.3125	31.2500	5.0000
4805	GLOBAL	Cartesian	1.9375	31.2500	5.0000
4806	GLOBAL	Cartesian	3.3125	32.5000	5.0000
4807	GLOBAL	Cartesian	1.9375	32.5000	5.0000
4808	GLOBAL	Cartesian	3.3125	33.7500	5.0000

Table 1: Joint Coordinates

Joint	CoordSys	CoordType	GlobalX	GlobalY	GlobalZ
			ft	ft	ft
4809	GLOBAL	Cartesian	1.9375	33.7500	5.0000
4810	GLOBAL	Cartesian	3.3125	35.0000	5.0000
4811	GLOBAL	Cartesian	1.9375	35.0000	5.0000
4812	GLOBAL	Cartesian	3.3125	36.2500	5.0000
4813	GLOBAL	Cartesian	1.9375	36.2500	5.0000
4814	GLOBAL	Cartesian	3.3125	37.5000	5.0000
4815	GLOBAL	Cartesian	1.9375	37.5000	5.0000
4816	GLOBAL	Cartesian	3.3125	38.7500	5.0000
4817	GLOBAL	Cartesian	1.9375	38.7500	5.0000
4818	GLOBAL	Cartesian	3.3125	40.0000	5.0000
4819	GLOBAL	Cartesian	1.9375	40.0000	5.0000
4820	GLOBAL	Cartesian	3.3125	41.2500	5.0000
4821	GLOBAL	Cartesian	1.9375	41.2500	5.0000
4822	GLOBAL	Cartesian	3.3125	42.5000	5.0000
4823	GLOBAL	Cartesian	1.9375	42.5000	5.0000
4824	GLOBAL	Cartesian	3.3125	43.7500	5.0000
4825	GLOBAL	Cartesian	1.9375	43.7500	5.0000
4826	GLOBAL	Cartesian	6.1875	26.2500	5.0000
4827	GLOBAL	Cartesian	6.1875	27.5000	5.0000
4828	GLOBAL	Cartesian	6.1875	28.7500	5.0000
4829	GLOBAL	Cartesian	6.1875	30.0000	5.0000
4830	GLOBAL	Cartesian	6.1875	31.2500	5.0000
4831	GLOBAL	Cartesian	6.1875	32.5000	5.0000
4832	GLOBAL	Cartesian	6.1875	33.7500	5.0000
4833	GLOBAL	Cartesian	6.1875	35.0000	5.0000
4834	GLOBAL	Cartesian	6.1875	36.2500	5.0000
4835	GLOBAL	Cartesian	6.1875	37.5000	5.0000
4836	GLOBAL	Cartesian	6.1875	38.7500	5.0000
4837	GLOBAL	Cartesian	6.1875	40.0000	5.0000
4838	GLOBAL	Cartesian	6.1875	41.2500	5.0000
4839	GLOBAL	Cartesian	6.1875	42.5000	5.0000
4840	GLOBAL	Cartesian	6.1875	43.7500	5.0000
4841	GLOBAL	Cartesian	7.5625	26.2500	5.0000
4842	GLOBAL	Cartesian	7.5625	27.5000	5.0000
4843	GLOBAL	Cartesian	7.5625	28.7500	5.0000
4844	GLOBAL	Cartesian	7.5625	30.0000	5.0000
4845	GLOBAL	Cartesian	7.5625	31.2500	5.0000
4846	GLOBAL	Cartesian	7.5625	32.5000	5.0000

Table 1: Joint Coordinates

Joint	CoordSys	CoordType	GlobalX	GlobalY	GlobalZ
			ft	ft	ft
4847	GLOBAL	Cartesian	7.5625	33.7500	5.0000
4848	GLOBAL	Cartesian	7.5625	35.0000	5.0000
4849	GLOBAL	Cartesian	7.5625	36.2500	5.0000
4850	GLOBAL	Cartesian	7.5625	37.5000	5.0000
4851	GLOBAL	Cartesian	7.5625	38.7500	5.0000
4852	GLOBAL	Cartesian	7.5625	40.0000	5.0000
4853	GLOBAL	Cartesian	7.5625	41.2500	5.0000
4854	GLOBAL	Cartesian	7.5625	42.5000	5.0000
4855	GLOBAL	Cartesian	7.5625	43.7500	5.0000
4856	GLOBAL	Cartesian	10.4375	26.2500	5.0000
4857	GLOBAL	Cartesian	10.4375	27.5000	5.0000
4858	GLOBAL	Cartesian	10.4375	28.7500	5.0000
4859	GLOBAL	Cartesian	10.4375	30.0000	5.0000
4860	GLOBAL	Cartesian	10.4375	31.2500	5.0000
4861	GLOBAL	Cartesian	10.4375	32.5000	5.0000
4862	GLOBAL	Cartesian	10.4375	33.7500	5.0000
4863	GLOBAL	Cartesian	10.4375	35.0000	5.0000
4864	GLOBAL	Cartesian	10.4375	36.2500	5.0000
4865	GLOBAL	Cartesian	10.4375	37.5000	5.0000
4866	GLOBAL	Cartesian	10.4375	38.7500	5.0000
4867	GLOBAL	Cartesian	10.4375	40.0000	5.0000
4868	GLOBAL	Cartesian	10.4375	41.2500	5.0000
4869	GLOBAL	Cartesian	10.4375	42.5000	5.0000
4870	GLOBAL	Cartesian	10.4375	43.7500	5.0000
4871	GLOBAL	Cartesian	11.8125	26.2500	5.0000
4872	GLOBAL	Cartesian	11.8125	27.5000	5.0000
4873	GLOBAL	Cartesian	11.8125	28.7500	5.0000
4874	GLOBAL	Cartesian	11.8125	30.0000	5.0000
4875	GLOBAL	Cartesian	11.8125	31.2500	5.0000
4876	GLOBAL	Cartesian	11.8125	32.5000	5.0000
4877	GLOBAL	Cartesian	11.8125	33.7500	5.0000
4878	GLOBAL	Cartesian	11.8125	35.0000	5.0000
4879	GLOBAL	Cartesian	11.8125	36.2500	5.0000
4880	GLOBAL	Cartesian	11.8125	37.5000	5.0000
4881	GLOBAL	Cartesian	11.8125	38.7500	5.0000
4882	GLOBAL	Cartesian	11.8125	40.0000	5.0000
4883	GLOBAL	Cartesian	11.8125	41.2500	5.0000
4884	GLOBAL	Cartesian	11.8125	42.5000	5.0000

Table 1: Joint Coordinates

Joint	CoordSys	CoordType	GlobalX	GlobalY	GlobalZ
			ft	ft	ft
4885	GLOBAL	Cartesian	11.8125	43.7500	5.0000
4886	GLOBAL	Cartesian	27.5000	67.1200	5.0000
4887	GLOBAL	Cartesian	27.5000	68.3700	5.0000
4888	GLOBAL	Cartesian	26.1250	67.1200	5.0000
4889	GLOBAL	Cartesian	26.1250	68.3700	5.0000
4890	GLOBAL	Cartesian	28.8750	67.1200	5.0000
4891	GLOBAL	Cartesian	28.8750	68.3700	5.0000
4892	GLOBAL	Cartesian	30.2500	67.1200	5.0000
4893	GLOBAL	Cartesian	30.2500	68.3700	5.0000
4894	GLOBAL	Cartesian	31.6250	67.1200	5.0000
4895	GLOBAL	Cartesian	31.6250	68.3700	5.0000
4896	GLOBAL	Cartesian	33.0000	67.1200	5.0000
4897	GLOBAL	Cartesian	33.0000	68.3700	5.0000
4898	GLOBAL	Cartesian	27.5000	64.3750	5.0000
4899	GLOBAL	Cartesian	26.1250	64.3750	5.0000
4900	GLOBAL	Cartesian	28.8750	64.3750	5.0000
4901	GLOBAL	Cartesian	27.5000	63.1250	5.0000
4902	GLOBAL	Cartesian	26.1250	63.1250	5.0000
4903	GLOBAL	Cartesian	28.8750	63.1250	5.0000
4904	GLOBAL	Cartesian	30.2500	64.3750	5.0000
4905	GLOBAL	Cartesian	30.2500	63.1250	5.0000
4906	GLOBAL	Cartesian	27.5000	60.3700	5.0000
4907	GLOBAL	Cartesian	25.4375	60.3700	5.0000
4908	GLOBAL	Cartesian	28.8750	60.3700	5.0000
4909	GLOBAL	Cartesian	27.5000	59.1200	5.0000
4910	GLOBAL	Cartesian	25.4375	59.1200	5.0000
4911	GLOBAL	Cartesian	28.8750	59.1200	5.0000
4912	GLOBAL	Cartesian	30.2500	60.3700	5.0000
4913	GLOBAL	Cartesian	30.2500	59.1200	5.0000
4914	GLOBAL	Cartesian	31.6250	64.3750	5.0000
4915	GLOBAL	Cartesian	31.6250	63.1250	5.0000
4916	GLOBAL	Cartesian	31.6250	60.3700	5.0000
4917	GLOBAL	Cartesian	31.6250	59.1200	5.0000
4918	GLOBAL	Cartesian	33.0000	64.3750	5.0000
4919	GLOBAL	Cartesian	33.0000	63.1250	5.0000
4920	GLOBAL	Cartesian	33.0000	60.3700	5.0000
4921	GLOBAL	Cartesian	33.0000	59.1200	5.0000
4922	GLOBAL	Cartesian	35.7500	67.1200	5.0000

Table 1: Joint Coordinates

Joint	CoordSys	CoordType	GlobalX	GlobalY	GlobalZ
			ft	ft	ft
4923	GLOBAL	Cartesian	35.7500	68.3700	5.0000
4924	GLOBAL	Cartesian	35.7500	64.3750	5.0000
4925	GLOBAL	Cartesian	35.7500	63.1250	5.0000
4926	GLOBAL	Cartesian	35.7500	60.3700	5.0000
4927	GLOBAL	Cartesian	35.7500	59.1200	5.0000
4928	GLOBAL	Cartesian	38.5000	67.1200	5.0000
4929	GLOBAL	Cartesian	38.5000	68.3700	5.0000
4930	GLOBAL	Cartesian	38.5000	64.3750	5.0000
4931	GLOBAL	Cartesian	38.5000	63.1250	5.0000
4932	GLOBAL	Cartesian	38.5000	60.3700	5.0000
4933	GLOBAL	Cartesian	38.5000	59.1200	5.0000
4934	GLOBAL	Cartesian	41.2500	67.1200	5.0000
4935	GLOBAL	Cartesian	41.2500	68.3700	5.0000
4936	GLOBAL	Cartesian	41.2500	64.3750	5.0000
4937	GLOBAL	Cartesian	41.2500	63.1250	5.0000
4938	GLOBAL	Cartesian	41.2500	60.3700	5.0000
4939	GLOBAL	Cartesian	41.2500	59.1200	5.0000
4940	GLOBAL	Cartesian	44.0000	67.1200	5.0000
4941	GLOBAL	Cartesian	44.0000	68.3611	5.0000
4942	GLOBAL	Cartesian	44.0000	64.3750	5.0000
4943	GLOBAL	Cartesian	44.0000	63.1250	5.0000
4944	GLOBAL	Cartesian	44.0000	60.3700	5.0000
4945	GLOBAL	Cartesian	44.0000	59.1200	5.0000
4946	GLOBAL	Cartesian	45.5000	59.1200	5.0000
4947	GLOBAL	Cartesian	45.5000	60.3700	5.0000
4948	GLOBAL	Cartesian	45.5000	63.1250	5.0000
4949	GLOBAL	Cartesian	45.5000	64.3750	5.0000
4950	GLOBAL	Cartesian	45.5000	67.1200	5.0000
4951	GLOBAL	Cartesian	45.5000	68.3700	5.0000
4952	GLOBAL	Cartesian	46.7500	1.6200	5.0000
4953	GLOBAL	Cartesian	46.7500	2.8700	5.0000
4954	GLOBAL	Cartesian	47.8305	5.6250	5.0000
4955	GLOBAL	Cartesian	47.8305	6.8750	5.0000
4956	GLOBAL	Cartesian	47.2275	9.6250	5.0000
4957	GLOBAL	Cartesian	47.2275	10.8750	5.0000
4958	GLOBAL	Cartesian	51.4320	1.6200	5.0000
4959	GLOBAL	Cartesian	51.4320	2.8700	5.0000
4960	GLOBAL	Cartesian	52.2500	6.2500	5.0000

Table 1: Joint Coordinates

Joint	CoordSys	CoordType	GlobalX	GlobalY	GlobalZ
			ft	ft	ft
4961	GLOBAL	Cartesian	52.2500	7.5000	5.0000
4962	GLOBAL	Cartesian	52.2500	10.0000	5.0000
4963	GLOBAL	Cartesian	52.2500	12.5000	5.0000
4964	GLOBAL	Cartesian	61.0625	24.5745	5.0000
4965	GLOBAL	Cartesian	59.6875	24.5745	5.0000
4966	GLOBAL	Cartesian	63.9375	25.0000	5.0000
4967	GLOBAL	Cartesian	65.3125	25.0000	5.0000
4968	GLOBAL	Cartesian	68.1875	25.0000	5.0000
4969	GLOBAL	Cartesian	69.5625	25.0000	5.0000
4970	GLOBAL	Cartesian	60.5000	21.2500	5.0000
4971	GLOBAL	Cartesian	58.0915	20.9955	5.0000
4972	GLOBAL	Cartesian	63.2500	21.2500	5.0000
4973	GLOBAL	Cartesian	66.0000	21.2500	5.0000
4974	GLOBAL	Cartesian	68.1875	21.4575	5.0000
4975	GLOBAL	Cartesian	69.5625	21.4575	5.0000
4976	GLOBAL	Cartesian	55.0000	13.7500	5.0000
4977	GLOBAL	Cartesian	55.0000	11.2500	5.0000
4978	GLOBAL	Cartesian	55.0000	8.2500	5.0000
4979	GLOBAL	Cartesian	52.4715	14.7960	5.0000
4980	GLOBAL	Cartesian	55.0000	16.2500	5.0000
4981	GLOBAL	Cartesian	55.0000	7.0000	5.0000
4982	GLOBAL	Cartesian	57.5090	10.1895	5.0000
4983	GLOBAL	Cartesian	57.5090	8.9395	5.0000
4984	GLOBAL	Cartesian	57.7500	12.5000	5.0000
4985	GLOBAL	Cartesian	57.7500	15.0000	5.0000
4986	GLOBAL	Cartesian	57.7500	17.5000	5.0000
4987	GLOBAL	Cartesian	55.4370	18.3750	5.0000
4988	GLOBAL	Cartesian	57.7500	20.0000	5.0000
4989	GLOBAL	Cartesian	60.5000	12.5000	5.0000
4990	GLOBAL	Cartesian	60.5000	11.2500	5.0000
4991	GLOBAL	Cartesian	60.5000	13.7500	5.0000
4992	GLOBAL	Cartesian	60.5000	16.2500	5.0000
4993	GLOBAL	Cartesian	60.5000	18.7500	5.0000
4994	GLOBAL	Cartesian	63.2500	20.0000	5.0000
4995	GLOBAL	Cartesian	63.2500	17.5000	5.0000
4996	GLOBAL	Cartesian	65.6990	18.9840	5.0000
4997	GLOBAL	Cartesian	62.7800	15.4290	5.0000
4998	GLOBAL	Cartesian	65.6990	17.7340	5.0000

Table 1: Joint Coordinates

Joint	CoordSys	CoordType	GlobalX	GlobalY	GlobalZ
			ft	ft	ft
4999	GLOBAL	Cartesian	67.7455	20.3400	5.0000
5000	GLOBAL	Cartesian	67.0740	18.3590	5.0000
5001	GLOBAL	Cartesian	52.4715	16.0460	5.0000
5002	GLOBAL	Cartesian	55.4370	19.6250	5.0000
5003	GLOBAL	Cartesian	55.0000	5.5000	5.0000
5004	GLOBAL	Cartesian	62.7800	14.1790	5.0000
5005	GLOBAL	Cartesian	69.1205	20.3400	5.0000
5006	GLOBAL	Cartesian	57.5132	8.1109	5.0000
5007	GLOBAL	Cartesian	56.3750	20.6250	5.0000
5008	GLOBAL	Cartesian	58.8510	22.4340	5.0000
5009	GLOBAL	Cartesian	57.9625	22.4724	5.0000
5010	GLOBAL	Cartesian	3.3125	25.0000	5.0000
5011	GLOBAL	Cartesian	1.9375	25.0000	5.0000
5012	GLOBAL	Cartesian	8.2500	25.0000	5.0000
5013	GLOBAL	Cartesian	9.0625	26.2500	5.0000
5014	GLOBAL	Cartesian	5.5000	25.0000	5.0000
5015	GLOBAL	Cartesian	4.6875	26.2500	5.0000
5016	GLOBAL	Cartesian	10.4375	25.0000	5.0000
5017	GLOBAL	Cartesian	11.8125	25.3865	5.0000
5018	GLOBAL	Cartesian	12.0925	22.5000	5.0000
5019	GLOBAL	Cartesian	11.8125	25.0000	5.0000
5020	GLOBAL	Cartesian	13.4675	22.5000	5.0000
5021	GLOBAL	Cartesian	9.6250	22.5000	5.0000
5022	GLOBAL	Cartesian	6.8750	22.5000	5.0000
5023	GLOBAL	Cartesian	2.7500	22.5000	5.0000
5024	GLOBAL	Cartesian	4.1250	22.5000	5.0000
5025	GLOBAL	Cartesian	13.7500	20.0000	5.0000
5026	GLOBAL	Cartesian	15.3035	20.0000	5.0000
5027	GLOBAL	Cartesian	11.0000	20.0000	5.0000
5028	GLOBAL	Cartesian	8.2500	20.0000	5.0000
5029	GLOBAL	Cartesian	5.6885	20.0000	5.0000
5030	GLOBAL	Cartesian	4.3135	20.0000	5.0000
5031	GLOBAL	Cartesian	2.0625	21.5124	5.0000
5032	GLOBAL	Cartesian	9.6250	17.5000	5.0000
5033	GLOBAL	Cartesian	12.3750	17.5000	5.0000
5034	GLOBAL	Cartesian	15.1250	17.5000	5.0000
5035	GLOBAL	Cartesian	17.1345	17.5000	5.0000
5036	GLOBAL	Cartesian	7.5025	17.5000	5.0000

Table 1: Joint Coordinates

Joint	CoordSys	CoordType	GlobalX	GlobalY	GlobalZ
			ft	ft	ft
5037	GLOBAL	Cartesian	6.1275	17.5000	5.0000
5038	GLOBAL	Cartesian	7.9720	15.0000	5.0000
5039	GLOBAL	Cartesian	9.3470	15.0000	5.0000
5040	GLOBAL	Cartesian	11.0000	15.0000	5.0000
5041	GLOBAL	Cartesian	13.7500	15.0000	5.0000
5042	GLOBAL	Cartesian	16.5000	15.0000	5.0000
5043	GLOBAL	Cartesian	18.9760	15.0000	5.0000
5044	GLOBAL	Cartesian	11.1765	12.5000	5.0000
5045	GLOBAL	Cartesian	12.5515	12.5000	5.0000
5046	GLOBAL	Cartesian	15.1250	12.5000	5.0000
5047	GLOBAL	Cartesian	17.8750	12.5000	5.0000
5048	GLOBAL	Cartesian	20.6250	12.5000	5.0000
5049	GLOBAL	Cartesian	14.3750	10.0000	5.0000
5050	GLOBAL	Cartesian	16.5000	10.0000	5.0000
5051	GLOBAL	Cartesian	19.2500	10.0000	5.0000
5052	GLOBAL	Cartesian	22.0000	10.0000	5.0000
5053	GLOBAL	Cartesian	16.2100	7.5000	5.0000
5054	GLOBAL	Cartesian	17.8750	7.5000	5.0000
5055	GLOBAL	Cartesian	20.6250	7.5000	5.0000
5056	GLOBAL	Cartesian	23.3750	7.5000	5.0000
5057	GLOBAL	Cartesian	22.1870	12.5000	5.0000
5058	GLOBAL	Cartesian	24.4025	9.5870	5.0000
5059	GLOBAL	Cartesian	20.3510	15.0000	5.0000
5060	GLOBAL	Cartesian	18.5095	17.5000	5.0000
5061	GLOBAL	Cartesian	13.0000	10.0000	5.0000
5062	GLOBAL	Cartesian	18.0395	5.0000	5.0000
5063	GLOBAL	Cartesian	19.4145	5.0000	5.0000
5064	GLOBAL	Cartesian	22.0000	5.0000	5.0000
5065	GLOBAL	Cartesian	24.7500	5.0000	5.0000
5066	GLOBAL	Cartesian	19.5375	2.8700	5.0000
5067	GLOBAL	Cartesian	20.9125	2.8700	5.0000
5068	GLOBAL	Cartesian	23.3750	2.8700	5.0000
5069	GLOBAL	Cartesian	26.1250	7.5000	5.0000
5070	GLOBAL	Cartesian	26.0000	5.0000	5.0000
5071	GLOBAL	Cartesian	24.7500	1.6200	5.0000
5072	GLOBAL	Cartesian	26.0000	1.6200	5.0000
5073	GLOBAL	Cartesian	26.0000	9.6200	5.0000
5074	GLOBAL	Cartesian	2.9385	20.0000	5.0000

Table 1: Joint Coordinates

Joint	CoordSys	CoordType	GlobalX	GlobalY	GlobalZ
			ft	ft	ft
5075	GLOBAL	Cartesian	23.2183	12.5000	5.0000
5076	GLOBAL	Cartesian	23.5620	12.5000	5.0000
5077	GLOBAL	Cartesian	20.5063	1.6200	5.0000
5078	GLOBAL	Cartesian	22.0000	1.6200	5.0000
5079	GLOBAL	Cartesian	16.6785	20.0000	5.0000
5080	GLOBAL	Cartesian	14.8350	7.5000	5.0000
5081	GLOBAL	Cartesian	17.2895	5.0000	5.0000
5082	GLOBAL	Cartesian	5.5024	17.5234	5.0000
5083	GLOBAL	Cartesian	10.2372	12.5000	5.0000
5084	GLOBAL	Cartesian	12.5798	10.0000	5.0000
5085	GLOBAL	Cartesian	14.2210	22.5000	5.0000
5086	GLOBAL	Cartesian	20.9691	15.0000	5.0000
5087	GLOBAL	Cartesian	4.1250	23.7500	5.0000
5088	GLOBAL	Cartesian	22.0000	68.3700	5.0000
5089	GLOBAL	Cartesian	23.3750	67.1200	5.0000
5090	GLOBAL	Cartesian	20.4902	68.3948	5.0000
5091	GLOBAL	Cartesian	20.9355	67.1200	5.0000
5092	GLOBAL	Cartesian	22.0000	64.3750	5.0000
5093	GLOBAL	Cartesian	24.7500	64.3750	5.0000
5094	GLOBAL	Cartesian	25.4375	61.6200	5.0000
5095	GLOBAL	Cartesian	23.3750	62.5000	5.0000
5096	GLOBAL	Cartesian	24.7500	60.3700	5.0000
5097	GLOBAL	Cartesian	20.6250	62.5000	5.0000
5098	GLOBAL	Cartesian	22.0000	60.0000	5.0000
5099	GLOBAL	Cartesian	19.4625	65.0000	5.0000
5100	GLOBAL	Cartesian	19.0695	66.5815	5.0000
5101	GLOBAL	Cartesian	20.2480	68.3700	5.0000
5102	GLOBAL	Cartesian	18.0875	65.0000	5.0000
5103	GLOBAL	Cartesian	17.8750	62.5000	5.0000
5104	GLOBAL	Cartesian	19.2500	60.0000	5.0000
5105	GLOBAL	Cartesian	20.6250	57.5000	5.0000
5106	GLOBAL	Cartesian	22.0000	57.5000	5.0000
5107	GLOBAL	Cartesian	16.5000	60.0000	5.0000
5108	GLOBAL	Cartesian	17.8750	57.5000	5.0000
5109	GLOBAL	Cartesian	16.2890	62.5000	5.0000
5110	GLOBAL	Cartesian	14.4910	60.0000	5.0000
5111	GLOBAL	Cartesian	15.1250	57.5000	5.0000
5112	GLOBAL	Cartesian	12.6925	57.5000	5.0000

Table 1: Joint Coordinates

Joint	CoordSys	CoordType	GlobalX	GlobalY	GlobalZ
			ft	ft	ft
5113	GLOBAL	Cartesian	13.7500	55.0000	5.0000
5114	GLOBAL	Cartesian	16.5000	55.0000	5.0000
5115	GLOBAL	Cartesian	18.8370	55.0000	5.0000
5116	GLOBAL	Cartesian	16.9560	52.5000	5.0000
5117	GLOBAL	Cartesian	15.1250	52.5000	5.0000
5118	GLOBAL	Cartesian	11.0000	55.0000	5.0000
5119	GLOBAL	Cartesian	12.3750	52.5000	5.0000
5120	GLOBAL	Cartesian	13.7500	50.0000	5.0000
5121	GLOBAL	Cartesian	15.1250	50.0000	5.0000
5122	GLOBAL	Cartesian	9.6250	52.5000	5.0000
5123	GLOBAL	Cartesian	11.0000	50.0000	5.0000
5124	GLOBAL	Cartesian	9.6250	55.0000	5.0000
5125	GLOBAL	Cartesian	17.3375	65.0000	5.0000
5126	GLOBAL	Cartesian	11.3175	57.5000	5.0000
5127	GLOBAL	Cartesian	13.1940	47.5000	5.0000
5128	GLOBAL	Cartesian	11.8190	47.5000	5.0000
5129	GLOBAL	Cartesian	9.6250	47.5000	5.0000
5130	GLOBAL	Cartesian	8.2500	50.0000	5.0000
5131	GLOBAL	Cartesian	6.8750	47.5000	5.0000
5132	GLOBAL	Cartesian	7.7210	52.5000	5.0000
5133	GLOBAL	Cartesian	5.9230	50.0000	5.0000
5134	GLOBAL	Cartesian	4.0000	47.5000	5.0000
5135	GLOBAL	Cartesian	4.5480	50.0000	5.0000
5136	GLOBAL	Cartesian	2.6250	47.5000	5.0000
5137	GLOBAL	Cartesian	11.8125	45.0000	5.0000
5138	GLOBAL	Cartesian	10.4375	45.0000	5.0000
5139	GLOBAL	Cartesian	3.3125	45.0000	5.0000
5140	GLOBAL	Cartesian	2.6250	46.2500	5.0000
5141	GLOBAL	Cartesian	1.9375	45.0000	5.0000
5142	GLOBAL	Cartesian	4.0000	46.2500	5.0000
5143	GLOBAL	Cartesian	3.1730	50.0000	5.0000
5144	GLOBAL	Cartesian	5.5000	45.0000	5.0000
5145	GLOBAL	Cartesian	6.8750	46.2500	5.0000
5146	GLOBAL	Cartesian	8.2500	45.0000	5.0000
5147	GLOBAL	Cartesian	8.2500	43.7500	5.0000
5148	GLOBAL	Cartesian	5.5000	43.7500	5.0000
5149	GLOBAL	Cartesian	14.9140	62.5000	5.0000
5150	GLOBAL	Cartesian	13.1160	60.0000	5.0000

Table 1: Joint Coordinates

Joint	CoordSys	CoordType	GlobalX	GlobalY	GlobalZ
			ft	ft	ft
5151	GLOBAL	Cartesian	8.2500	55.0000	5.0000
5152	GLOBAL	Cartesian	12.4285	60.0000	5.0000
5153	GLOBAL	Cartesian	9.9425	57.5000	5.0000
5154	GLOBAL	Cartesian	20.2120	55.0000	5.0000
5155	GLOBAL	Cartesian	19.5245	53.7500	5.0000
5156	GLOBAL	Cartesian	7.0335	53.1250	5.0000
5157	GLOBAL	Cartesian	6.3460	52.5000	5.0000
5158	GLOBAL	Cartesian	5.2355	50.6250	5.0000
5159	GLOBAL	Cartesian	1.9375	48.7500	5.0000
5160	GLOBAL	Cartesian	7.0335	53.7500	5.0000
5161	GLOBAL	Cartesian	5.9083	52.9381	5.0000
5162	GLOBAL	Cartesian	18.3310	52.5000	5.0000
5163	GLOBAL	Cartesian	46.7500	59.1200	5.0000
5164	GLOBAL	Cartesian	46.7500	60.3700	5.0000
5165	GLOBAL	Cartesian	46.7500	62.5000	5.0000
5166	GLOBAL	Cartesian	45.5000	62.5000	5.0000
5167	GLOBAL	Cartesian	46.7500	65.0000	5.0000
5168	GLOBAL	Cartesian	45.5000	65.0000	5.0000
5169	GLOBAL	Cartesian	46.7500	67.1200	5.0000
5170	GLOBAL	Cartesian	46.7500	68.3700	5.0000
5171	GLOBAL	Cartesian	61.0625	45.9095	5.0000
5172	GLOBAL	Cartesian	63.2500	45.0000	5.0000
5173	GLOBAL	Cartesian	63.2500	43.7500	5.0000
5174	GLOBAL	Cartesian	66.0000	46.2500	5.0000
5175	GLOBAL	Cartesian	66.0000	43.7500	5.0000
5176	GLOBAL	Cartesian	68.1875	45.0000	5.0000
5177	GLOBAL	Cartesian	69.5625	46.2500	5.0000
5178	GLOBAL	Cartesian	58.5060	47.8435	5.0000
5179	GLOBAL	Cartesian	59.6875	45.2845	5.0000
5180	GLOBAL	Cartesian	60.5000	48.7500	5.0000
5181	GLOBAL	Cartesian	63.2500	47.5000	5.0000
5182	GLOBAL	Cartesian	66.0000	48.7500	5.0000
5183	GLOBAL	Cartesian	68.1875	47.5000	5.0000
5184	GLOBAL	Cartesian	69.5625	48.1250	5.0000
5185	GLOBAL	Cartesian	56.3750	49.3750	5.0000
5186	GLOBAL	Cartesian	57.7500	50.0000	5.0000
5187	GLOBAL	Cartesian	60.5000	51.2500	5.0000
5188	GLOBAL	Cartesian	63.2500	50.0000	5.0000

Table 1: Joint Coordinates

Joint	CoordSys	CoordType	GlobalX	GlobalY	GlobalZ
			ft	ft	ft
5189	GLOBAL	Cartesian	65.5510	51.0460	5.0000
5190	GLOBAL	Cartesian	67.7135	49.5290	5.0000
5191	GLOBAL	Cartesian	55.5285	51.4840	5.0000
5192	GLOBAL	Cartesian	57.7500	52.5000	5.0000
5193	GLOBAL	Cartesian	60.5000	53.7500	5.0000
5194	GLOBAL	Cartesian	50.3980	56.6580	5.0000
5195	GLOBAL	Cartesian	53.3660	53.0065	5.0000
5196	GLOBAL	Cartesian	52.5695	55.1455	5.0000
5197	GLOBAL	Cartesian	55.0000	53.7500	5.0000
5198	GLOBAL	Cartesian	57.7500	55.0000	5.0000
5199	GLOBAL	Cartesian	60.5000	56.2500	5.0000
5200	GLOBAL	Cartesian	55.0000	56.2500	5.0000
5201	GLOBAL	Cartesian	52.2500	57.5000	5.0000
5202	GLOBAL	Cartesian	49.6015	58.7960	5.0000
5203	GLOBAL	Cartesian	49.5000	61.2500	5.0000
5204	GLOBAL	Cartesian	49.5000	63.7500	5.0000
5205	GLOBAL	Cartesian	49.5000	66.2500	5.0000
5206	GLOBAL	Cartesian	51.6410	67.1370	5.0000
5207	GLOBAL	Cartesian	52.2500	65.0000	5.0000
5208	GLOBAL	Cartesian	52.2500	62.5000	5.0000
5209	GLOBAL	Cartesian	52.2500	60.0000	5.0000
5210	GLOBAL	Cartesian	55.0000	58.7500	5.0000
5211	GLOBAL	Cartesian	55.0000	61.7500	5.0000
5212	GLOBAL	Cartesian	54.4435	63.8960	5.0000
5213	GLOBAL	Cartesian	57.4880	59.8810	5.0000
5214	GLOBAL	Cartesian	57.7500	57.5000	5.0000
5215	GLOBAL	Cartesian	59.6505	58.3640	5.0000
5216	GLOBAL	Cartesian	63.2500	52.5000	5.0000
5217	GLOBAL	Cartesian	62.5440	54.7695	5.0000
5218	GLOBAL	Cartesian	64.7635	53.1880	5.0000
5219	GLOBAL	Cartesian	61.8750	56.8750	5.0000
5220	GLOBAL	Cartesian	51.6410	68.3870	5.0000
5221	GLOBAL	Cartesian	53.7995	66.1250	5.0000
5222	GLOBAL	Cartesian	56.7000	62.0230	5.0000
5223	GLOBAL	Cartesian	56.7000	62.4397	5.0000
5224	GLOBAL	Cartesian	59.6522	58.9869	5.0000
5225	GLOBAL	Cartesian	62.9718	55.0843	5.0000
5226	GLOBAL	Cartesian	65.5510	52.2960	5.0000

Table 1: Joint Coordinates

Joint	CoordSys	CoordType	GlobalX ft	GlobalY ft	GlobalZ ft
5227	GLOBAL	Cartesian	62.5440	56.0195	5.0000
5228	GLOBAL	Cartesian	6.0000	36.2500	-4.5000
5229	GLOBAL	Cartesian	6.8750	36.2500	0.0000
5230	GLOBAL	Cartesian	8.7500	36.2500	-4.5000
5231	GLOBAL	Cartesian	68.7500	27.5000	-4.5000

8-5-1-2 Joint restraints

Table 2: Joint Restraint Assignments

Table 2: Joint Restraint Assignments

Joint	U1	U2	U3	R1	R2	R3
320	Yes	Yes	Yes	Yes	Yes	Yes
322	Yes	Yes	Yes	Yes	Yes	Yes
328	Yes	Yes	Yes	Yes	Yes	Yes
334	Yes	Yes	Yes	Yes	Yes	Yes
336	Yes	Yes	Yes	Yes	Yes	Yes
342	Yes	Yes	Yes	Yes	Yes	Yes
344	Yes	Yes	Yes	Yes	Yes	Yes
398	Yes	Yes	Yes	Yes	Yes	Yes
404	Yes	Yes	Yes	Yes	Yes	Yes
407	Yes	Yes	Yes	Yes	Yes	Yes
409	Yes	Yes	Yes	Yes	Yes	Yes
412	Yes	Yes	Yes	Yes	Yes	Yes
414	Yes	Yes	Yes	Yes	Yes	Yes
415	Yes	Yes	Yes	Yes	Yes	Yes
428	Yes	Yes	Yes	Yes	Yes	Yes
440	Yes	Yes	Yes	Yes	Yes	Yes
442	Yes	Yes	Yes	Yes	Yes	Yes
452	Yes	Yes	Yes	Yes	Yes	Yes
455	Yes	Yes	Yes	Yes	Yes	Yes
457	Yes	Yes	Yes	Yes	Yes	Yes
459	Yes	Yes	Yes	Yes	Yes	Yes
462	Yes	Yes	Yes	Yes	Yes	Yes
465	Yes	Yes	Yes	Yes	Yes	Yes

Table 2: Joint Restraint Assignments

Joint	U1	U2	U3	R1	R2	R3
509	Yes	Yes	Yes	Yes	Yes	Yes
525	Yes	Yes	Yes	Yes	Yes	Yes
536	Yes	Yes	Yes	Yes	Yes	Yes
538	Yes	Yes	Yes	Yes	Yes	Yes
548	Yes	Yes	Yes	Yes	Yes	Yes
556	Yes	Yes	Yes	Yes	Yes	Yes
558	Yes	Yes	Yes	Yes	Yes	Yes
560	Yes	Yes	Yes	Yes	Yes	Yes
561	Yes	Yes	Yes	Yes	Yes	Yes
564	Yes	Yes	Yes	Yes	Yes	Yes
572	Yes	Yes	Yes	Yes	Yes	Yes
578	Yes	Yes	Yes	Yes	Yes	Yes
580	Yes	Yes	Yes	Yes	Yes	Yes
582	Yes	Yes	Yes	Yes	Yes	Yes
584	Yes	Yes	Yes	Yes	Yes	Yes
586	Yes	Yes	Yes	Yes	Yes	Yes
587	Yes	Yes	Yes	Yes	Yes	Yes
596	Yes	Yes	Yes	Yes	Yes	Yes
606	Yes	Yes	Yes	Yes	Yes	Yes
656	Yes	Yes	Yes	Yes	Yes	Yes
658	Yes	Yes	Yes	Yes	Yes	Yes
660	Yes	Yes	Yes	Yes	Yes	Yes
662	Yes	Yes	Yes	Yes	Yes	Yes
666	Yes	Yes	Yes	Yes	Yes	Yes
667	Yes	Yes	Yes	Yes	Yes	Yes
692	Yes	Yes	Yes	Yes	Yes	Yes
694	Yes	Yes	Yes	Yes	Yes	Yes
696	Yes	Yes	Yes	Yes	Yes	Yes
698	Yes	Yes	Yes	Yes	Yes	Yes
700	Yes	Yes	Yes	Yes	Yes	Yes
703	Yes	Yes	Yes	Yes	Yes	Yes
722	Yes	Yes	Yes	Yes	Yes	Yes
728	Yes	Yes	Yes	Yes	Yes	Yes
729	Yes	Yes	Yes	Yes	Yes	Yes
734	Yes	Yes	Yes	Yes	Yes	Yes
736	Yes	Yes	Yes	Yes	Yes	Yes
739	Yes	Yes	Yes	Yes	Yes	Yes
741	Yes	Yes	Yes	Yes	Yes	Yes

Table 2: Joint Restraint Assignments

Joint	U1	U2	U3	R1	R2	R3
744	Yes	Yes	Yes	Yes	Yes	Yes
747	Yes	Yes	Yes	Yes	Yes	Yes
757	Yes	Yes	Yes	Yes	Yes	Yes
759	Yes	Yes	Yes	Yes	Yes	Yes
760	Yes	Yes	Yes	Yes	Yes	Yes
763	Yes	Yes	Yes	Yes	Yes	Yes
774	Yes	Yes	Yes	Yes	Yes	Yes
776	Yes	Yes	Yes	Yes	Yes	Yes
778	Yes	Yes	Yes	Yes	Yes	Yes
854	Yes	Yes	Yes	Yes	Yes	Yes
858	Yes	Yes	Yes	Yes	Yes	Yes
876	Yes	Yes	Yes	Yes	Yes	Yes
878	Yes	Yes	Yes	Yes	Yes	Yes
879	Yes	Yes	Yes	Yes	Yes	Yes
882	Yes	Yes	Yes	Yes	Yes	Yes
885	Yes	Yes	Yes	Yes	Yes	Yes
887	Yes	Yes	Yes	Yes	Yes	Yes
921	Yes	Yes	Yes	Yes	Yes	Yes
963	Yes	Yes	Yes	Yes	Yes	Yes
974	Yes	Yes	Yes	Yes	Yes	Yes
981	Yes	Yes	Yes	Yes	Yes	Yes
983	Yes	Yes	Yes	Yes	Yes	Yes
995	Yes	Yes	Yes	Yes	Yes	Yes
1054	Yes	Yes	Yes	Yes	Yes	Yes
1071	Yes	Yes	Yes	Yes	Yes	Yes
1074	Yes	Yes	Yes	Yes	Yes	Yes
1076	Yes	Yes	Yes	Yes	Yes	Yes
1078	Yes	Yes	Yes	Yes	Yes	Yes
1081	Yes	Yes	Yes	Yes	Yes	Yes
1083	Yes	Yes	Yes	Yes	Yes	Yes
1084	Yes	Yes	Yes	Yes	Yes	Yes
1089	Yes	Yes	Yes	Yes	Yes	Yes
1091	Yes	Yes	Yes	Yes	Yes	Yes
1095	Yes	Yes	Yes	Yes	Yes	Yes
1098	Yes	Yes	Yes	Yes	Yes	Yes
1101	Yes	Yes	Yes	Yes	Yes	Yes
1128	Yes	Yes	Yes	Yes	Yes	Yes
1130	Yes	Yes	Yes	Yes	Yes	Yes

Table 2: Joint Restraint Assignments

Joint	U1	U2	U3	R1	R2	R3
1142	Yes	Yes	Yes	Yes	Yes	Yes
1144	Yes	Yes	Yes	Yes	Yes	Yes
1146	Yes	Yes	Yes	Yes	Yes	Yes
1148	Yes	Yes	Yes	Yes	Yes	Yes
1160	Yes	Yes	Yes	Yes	Yes	Yes
1162	Yes	Yes	Yes	Yes	Yes	Yes
1164	Yes	Yes	Yes	Yes	Yes	Yes
1166	Yes	Yes	Yes	Yes	Yes	Yes
1168	Yes	Yes	Yes	Yes	Yes	Yes
1170	Yes	Yes	Yes	Yes	Yes	Yes
1226	Yes	Yes	Yes	Yes	Yes	Yes
1230	Yes	Yes	Yes	Yes	Yes	Yes
1236	Yes	Yes	Yes	Yes	Yes	Yes
1240	Yes	Yes	Yes	Yes	Yes	Yes
1244	Yes	Yes	Yes	Yes	Yes	Yes
1248	Yes	Yes	Yes	Yes	Yes	Yes
1320	Yes	Yes	Yes	Yes	Yes	Yes
1322	Yes	Yes	Yes	Yes	Yes	Yes
1324	Yes	Yes	Yes	Yes	Yes	Yes
1326	Yes	Yes	Yes	Yes	Yes	Yes
1328	Yes	Yes	Yes	Yes	Yes	Yes
1330	Yes	Yes	Yes	Yes	Yes	Yes
1332	Yes	Yes	Yes	Yes	Yes	Yes
1334	Yes	Yes	Yes	Yes	Yes	Yes
1336	Yes	Yes	Yes	Yes	Yes	Yes
1339	Yes	Yes	Yes	Yes	Yes	Yes
1341	Yes	Yes	Yes	Yes	Yes	Yes
1343	Yes	Yes	Yes	Yes	Yes	Yes
1346	Yes	Yes	Yes	Yes	Yes	Yes
1350	Yes	Yes	Yes	Yes	Yes	Yes
1352	Yes	Yes	Yes	Yes	Yes	Yes
1357	Yes	Yes	Yes	Yes	Yes	Yes
1360	Yes	Yes	Yes	Yes	Yes	Yes
1363	Yes	Yes	Yes	Yes	Yes	Yes
1366	Yes	Yes	Yes	Yes	Yes	Yes
1369	Yes	Yes	Yes	Yes	Yes	Yes
1371	Yes	Yes	Yes	Yes	Yes	Yes
1373	Yes	Yes	Yes	Yes	Yes	Yes

Table 2: Joint Restraint Assignments

Joint	U1	U2	U3	R1	R2	R3
1375	Yes	Yes	Yes	Yes	Yes	Yes
1377	Yes	Yes	Yes	Yes	Yes	Yes
1379	Yes	Yes	Yes	Yes	Yes	Yes
1381	Yes	Yes	Yes	Yes	Yes	Yes
1383	Yes	Yes	Yes	Yes	Yes	Yes
1385	Yes	Yes	Yes	Yes	Yes	Yes
1387	Yes	Yes	Yes	Yes	Yes	Yes
1389	Yes	Yes	Yes	Yes	Yes	Yes
1391	Yes	Yes	Yes	Yes	Yes	Yes
1393	Yes	Yes	Yes	Yes	Yes	Yes
1395	Yes	Yes	Yes	Yes	Yes	Yes
1397	Yes	Yes	Yes	Yes	Yes	Yes
1399	Yes	Yes	Yes	Yes	Yes	Yes
1402	Yes	Yes	Yes	Yes	Yes	Yes
1404	Yes	Yes	Yes	Yes	Yes	Yes
1406	Yes	Yes	Yes	Yes	Yes	Yes
1408	Yes	Yes	Yes	Yes	Yes	Yes
1411	Yes	Yes	Yes	Yes	Yes	Yes
1413	Yes	Yes	Yes	Yes	Yes	Yes
1415	Yes	Yes	Yes	Yes	Yes	Yes
1418	Yes	Yes	Yes	Yes	Yes	Yes
1420	Yes	Yes	Yes	Yes	Yes	Yes
1422	Yes	Yes	Yes	Yes	Yes	Yes
1424	Yes	Yes	Yes	Yes	Yes	Yes
1426	Yes	Yes	Yes	Yes	Yes	Yes
1428	Yes	Yes	Yes	Yes	Yes	Yes
1430	Yes	Yes	Yes	Yes	Yes	Yes
1432	Yes	Yes	Yes	Yes	Yes	Yes
1434	Yes	Yes	Yes	Yes	Yes	Yes
1436	Yes	Yes	Yes	Yes	Yes	Yes
1437	Yes	Yes	Yes	Yes	Yes	Yes
1438	Yes	Yes	Yes	Yes	Yes	Yes
1439	Yes	Yes	Yes	Yes	Yes	Yes
1440	Yes	Yes	Yes	Yes	Yes	Yes
1442	Yes	Yes	Yes	Yes	Yes	Yes
1443	Yes	Yes	Yes	Yes	Yes	Yes
1457	Yes	Yes	Yes	Yes	Yes	Yes
1462	Yes	Yes	Yes	Yes	Yes	Yes

Table 2: Joint Restraint Assignments

Joint	U1	U2	U3	R1	R2	R3
1656	Yes	Yes	Yes	Yes	Yes	Yes
1657	Yes	Yes	Yes	Yes	Yes	Yes
1658	Yes	Yes	Yes	Yes	Yes	Yes
1660	Yes	Yes	Yes	Yes	Yes	Yes
1682	Yes	Yes	Yes	Yes	Yes	Yes
1683	Yes	Yes	Yes	Yes	Yes	Yes
1684	Yes	Yes	Yes	Yes	Yes	Yes
1685	Yes	Yes	Yes	Yes	Yes	Yes
1686	Yes	Yes	Yes	Yes	Yes	Yes
1687	Yes	Yes	Yes	Yes	Yes	Yes
1688	Yes	Yes	Yes	Yes	Yes	Yes
1689	Yes	Yes	Yes	Yes	Yes	Yes
1690	Yes	Yes	Yes	Yes	Yes	Yes
1691	Yes	Yes	Yes	Yes	Yes	Yes
1692	Yes	Yes	Yes	Yes	Yes	Yes
1693	Yes	Yes	Yes	Yes	Yes	Yes
1725	Yes	Yes	Yes	Yes	Yes	Yes
1757	Yes	Yes	Yes	Yes	Yes	Yes
1764	Yes	Yes	Yes	Yes	Yes	Yes
2031	Yes	Yes	Yes	Yes	Yes	Yes
2182	Yes	Yes	Yes	Yes	Yes	Yes
2184	Yes	Yes	Yes	Yes	Yes	Yes
2186	Yes	Yes	Yes	Yes	Yes	Yes
2188	Yes	Yes	Yes	Yes	Yes	Yes
2190	Yes	Yes	Yes	Yes	Yes	Yes
2192	Yes	Yes	Yes	Yes	Yes	Yes
2194	Yes	Yes	Yes	Yes	Yes	Yes
2196	Yes	Yes	Yes	Yes	Yes	Yes
2198	Yes	Yes	Yes	Yes	Yes	Yes
2200	Yes	Yes	Yes	Yes	Yes	Yes
2202	Yes	Yes	Yes	Yes	Yes	Yes
2204	Yes	Yes	Yes	Yes	Yes	Yes
2206	Yes	Yes	Yes	Yes	Yes	Yes
2208	Yes	Yes	Yes	Yes	Yes	Yes
2210	Yes	Yes	Yes	Yes	Yes	Yes
2212	Yes	Yes	Yes	Yes	Yes	Yes
2214	Yes	Yes	Yes	Yes	Yes	Yes
2216	Yes	Yes	Yes	Yes	Yes	Yes

Table 2: Joint Restraint Assignments

Joint	U1	U2	U3	R1	R2	R3
2220	Yes	Yes	Yes	Yes	Yes	Yes
2224	Yes	Yes	Yes	Yes	Yes	Yes
2228	Yes	Yes	Yes	Yes	Yes	Yes
2232	Yes	Yes	Yes	Yes	Yes	Yes
2236	Yes	Yes	Yes	Yes	Yes	Yes
2240	Yes	Yes	Yes	Yes	Yes	Yes
2246	Yes	Yes	Yes	Yes	Yes	Yes
2248	Yes	Yes	Yes	Yes	Yes	Yes
2250	Yes	Yes	Yes	Yes	Yes	Yes
2252	Yes	Yes	Yes	Yes	Yes	Yes
2254	Yes	Yes	Yes	Yes	Yes	Yes
2256	Yes	Yes	Yes	Yes	Yes	Yes
2258	Yes	Yes	Yes	Yes	Yes	Yes
2260	Yes	Yes	Yes	Yes	Yes	Yes
2276	Yes	Yes	Yes	Yes	Yes	Yes
2278	Yes	Yes	Yes	Yes	Yes	Yes
2280	Yes	Yes	Yes	Yes	Yes	Yes
2282	Yes	Yes	Yes	Yes	Yes	Yes
2284	Yes	Yes	Yes	Yes	Yes	Yes
2286	Yes	Yes	Yes	Yes	Yes	Yes
2288	Yes	Yes	Yes	Yes	Yes	Yes
2290	Yes	Yes	Yes	Yes	Yes	Yes
2306	Yes	Yes	Yes	Yes	Yes	Yes
2308	Yes	Yes	Yes	Yes	Yes	Yes
2310	Yes	Yes	Yes	Yes	Yes	Yes
2312	Yes	Yes	Yes	Yes	Yes	Yes
2314	Yes	Yes	Yes	Yes	Yes	Yes
2316	Yes	Yes	Yes	Yes	Yes	Yes
2318	Yes	Yes	Yes	Yes	Yes	Yes
2320	Yes	Yes	Yes	Yes	Yes	Yes
2322	Yes	Yes	Yes	Yes	Yes	Yes
2324	Yes	Yes	Yes	Yes	Yes	Yes
2326	Yes	Yes	Yes	Yes	Yes	Yes
2328	Yes	Yes	Yes	Yes	Yes	Yes
2332	Yes	Yes	Yes	Yes	Yes	Yes
2334	Yes	Yes	Yes	Yes	Yes	Yes
2336	Yes	Yes	Yes	Yes	Yes	Yes
2338	Yes	Yes	Yes	Yes	Yes	Yes

Table 2: Joint Restraint Assignments

Joint	U1	U2	U3	R1	R2	R3
2340	Yes	Yes	Yes	Yes	Yes	Yes
2348	Yes	Yes	Yes	Yes	Yes	Yes
2359	Yes	Yes	Yes	Yes	Yes	Yes
2361	Yes	Yes	Yes	Yes	Yes	Yes
2363	Yes	Yes	Yes	Yes	Yes	Yes
2367	Yes	Yes	Yes	Yes	Yes	Yes
2371	Yes	Yes	Yes	Yes	Yes	Yes
2378	Yes	Yes	Yes	Yes	Yes	Yes
2380	Yes	Yes	Yes	Yes	Yes	Yes
2383	Yes	Yes	Yes	Yes	Yes	Yes
2385	Yes	Yes	Yes	Yes	Yes	Yes
2392	Yes	Yes	Yes	Yes	Yes	Yes
2396	Yes	Yes	Yes	Yes	Yes	Yes
2399	Yes	Yes	Yes	Yes	Yes	Yes
2403	Yes	Yes	Yes	Yes	Yes	Yes
2408	Yes	Yes	Yes	Yes	Yes	Yes
2411	Yes	Yes	Yes	Yes	Yes	Yes
2415	Yes	Yes	Yes	Yes	Yes	Yes
2421	Yes	Yes	Yes	Yes	Yes	Yes
2425	Yes	Yes	Yes	Yes	Yes	Yes
2428	Yes	Yes	Yes	Yes	Yes	Yes
2464	Yes	Yes	Yes	Yes	Yes	Yes
2469	Yes	Yes	Yes	Yes	Yes	Yes
2486	Yes	Yes	Yes	Yes	Yes	Yes
2533	Yes	Yes	Yes	Yes	Yes	Yes
2540	Yes	Yes	Yes	Yes	Yes	Yes
2547	Yes	Yes	Yes	Yes	Yes	Yes
2588	Yes	Yes	Yes	Yes	Yes	Yes
2590	Yes	Yes	Yes	Yes	Yes	Yes
2592	Yes	Yes	Yes	Yes	Yes	Yes
2594	Yes	Yes	Yes	Yes	Yes	Yes
2596	Yes	Yes	Yes	Yes	Yes	Yes
2598	Yes	Yes	Yes	Yes	Yes	Yes
2600	Yes	Yes	Yes	Yes	Yes	Yes
2602	Yes	Yes	Yes	Yes	Yes	Yes
2604	Yes	Yes	Yes	Yes	Yes	Yes
2606	Yes	Yes	Yes	Yes	Yes	Yes
2608	Yes	Yes	Yes	Yes	Yes	Yes

Table 2: Joint Restraint Assignments

Joint	U1	U2	U3	R1	R2	R3
2610	Yes	Yes	Yes	Yes	Yes	Yes
2612	Yes	Yes	Yes	Yes	Yes	Yes
2614	Yes	Yes	Yes	Yes	Yes	Yes
2616	Yes	Yes	Yes	Yes	Yes	Yes
2618	Yes	Yes	Yes	Yes	Yes	Yes
2620	Yes	Yes	Yes	Yes	Yes	Yes
2622	Yes	Yes	Yes	Yes	Yes	Yes
2624	Yes	Yes	Yes	Yes	Yes	Yes
2626	Yes	Yes	Yes	Yes	Yes	Yes
2628	Yes	Yes	Yes	Yes	Yes	Yes
2630	Yes	Yes	Yes	Yes	Yes	Yes
2632	Yes	Yes	Yes	Yes	Yes	Yes
2634	Yes	Yes	Yes	Yes	Yes	Yes
2636	Yes	Yes	Yes	Yes	Yes	Yes
2638	Yes	Yes	Yes	Yes	Yes	Yes
2640	Yes	Yes	Yes	Yes	Yes	Yes
2642	Yes	Yes	Yes	Yes	Yes	Yes
2644	Yes	Yes	Yes	Yes	Yes	Yes
2646	Yes	Yes	Yes	Yes	Yes	Yes
2648	Yes	Yes	Yes	Yes	Yes	Yes
2650	Yes	Yes	Yes	Yes	Yes	Yes
2652	Yes	Yes	Yes	Yes	Yes	Yes
2654	Yes	Yes	Yes	Yes	Yes	Yes
2656	Yes	Yes	Yes	Yes	Yes	Yes
2658	Yes	Yes	Yes	Yes	Yes	Yes
2660	Yes	Yes	Yes	Yes	Yes	Yes
2662	Yes	Yes	Yes	Yes	Yes	Yes
2664	Yes	Yes	Yes	Yes	Yes	Yes
2666	Yes	Yes	Yes	Yes	Yes	Yes
2668	Yes	Yes	Yes	Yes	Yes	Yes
2670	Yes	Yes	Yes	Yes	Yes	Yes
2672	Yes	Yes	Yes	Yes	Yes	Yes
2674	Yes	Yes	Yes	Yes	Yes	Yes
2676	Yes	Yes	Yes	Yes	Yes	Yes
2678	Yes	Yes	Yes	Yes	Yes	Yes
2680	Yes	Yes	Yes	Yes	Yes	Yes
2682	Yes	Yes	Yes	Yes	Yes	Yes
2684	Yes	Yes	Yes	Yes	Yes	Yes

Table 2: Joint Restraint Assignments

Joint	U1	U2	U3	R1	R2	R3
2686	Yes	Yes	Yes	Yes	Yes	Yes
2688	Yes	Yes	Yes	Yes	Yes	Yes
2690	Yes	Yes	Yes	Yes	Yes	Yes
2692	Yes	Yes	Yes	Yes	Yes	Yes
2694	Yes	Yes	Yes	Yes	Yes	Yes
2696	Yes	Yes	Yes	Yes	Yes	Yes
2698	Yes	Yes	Yes	Yes	Yes	Yes
2700	Yes	Yes	Yes	Yes	Yes	Yes
2702	Yes	Yes	Yes	Yes	Yes	Yes
2704	Yes	Yes	Yes	Yes	Yes	Yes
2706	Yes	Yes	Yes	Yes	Yes	Yes
2708	Yes	Yes	Yes	Yes	Yes	Yes
2710	Yes	Yes	Yes	Yes	Yes	Yes
2712	Yes	Yes	Yes	Yes	Yes	Yes
2714	Yes	Yes	Yes	Yes	Yes	Yes
2716	Yes	Yes	Yes	Yes	Yes	Yes
2718	Yes	Yes	Yes	Yes	Yes	Yes
2720	Yes	Yes	Yes	Yes	Yes	Yes
2722	Yes	Yes	Yes	Yes	Yes	Yes
2724	Yes	Yes	Yes	Yes	Yes	Yes
2726	Yes	Yes	Yes	Yes	Yes	Yes
2728	Yes	Yes	Yes	Yes	Yes	Yes
2730	Yes	Yes	Yes	Yes	Yes	Yes
2732	Yes	Yes	Yes	Yes	Yes	Yes
2734	Yes	Yes	Yes	Yes	Yes	Yes
2736	Yes	Yes	Yes	Yes	Yes	Yes
2738	Yes	Yes	Yes	Yes	Yes	Yes
2740	Yes	Yes	Yes	Yes	Yes	Yes
2742	Yes	Yes	Yes	Yes	Yes	Yes
2744	Yes	Yes	Yes	Yes	Yes	Yes
2746	Yes	Yes	Yes	Yes	Yes	Yes
2748	Yes	Yes	Yes	Yes	Yes	Yes
2750	Yes	Yes	Yes	Yes	Yes	Yes
2752	Yes	Yes	Yes	Yes	Yes	Yes
2754	Yes	Yes	Yes	Yes	Yes	Yes
2756	Yes	Yes	Yes	Yes	Yes	Yes
2758	Yes	Yes	Yes	Yes	Yes	Yes
2760	Yes	Yes	Yes	Yes	Yes	Yes

Table 2: Joint Restraint Assignments

Joint	U1	U2	U3	R1	R2	R3
2762	Yes	Yes	Yes	Yes	Yes	Yes
2764	Yes	Yes	Yes	Yes	Yes	Yes
2766	Yes	Yes	Yes	Yes	Yes	Yes
2768	Yes	Yes	Yes	Yes	Yes	Yes
2770	Yes	Yes	Yes	Yes	Yes	Yes
2772	Yes	Yes	Yes	Yes	Yes	Yes
2774	Yes	Yes	Yes	Yes	Yes	Yes
2776	Yes	Yes	Yes	Yes	Yes	Yes
2778	Yes	Yes	Yes	Yes	Yes	Yes
2780	Yes	Yes	Yes	Yes	Yes	Yes
2782	Yes	Yes	Yes	Yes	Yes	Yes
2784	Yes	Yes	Yes	Yes	Yes	Yes
2786	Yes	Yes	Yes	Yes	Yes	Yes
2788	Yes	Yes	Yes	Yes	Yes	Yes
2790	Yes	Yes	Yes	Yes	Yes	Yes
2792	Yes	Yes	Yes	Yes	Yes	Yes
2794	Yes	Yes	Yes	Yes	Yes	Yes
2796	Yes	Yes	Yes	Yes	Yes	Yes
2798	Yes	Yes	Yes	Yes	Yes	Yes
2800	Yes	Yes	Yes	Yes	Yes	Yes
2802	Yes	Yes	Yes	Yes	Yes	Yes
2804	Yes	Yes	Yes	Yes	Yes	Yes
2806	Yes	Yes	Yes	Yes	Yes	Yes
2808	Yes	Yes	Yes	Yes	Yes	Yes
2810	Yes	Yes	Yes	Yes	Yes	Yes
2812	Yes	Yes	Yes	Yes	Yes	Yes
2814	Yes	Yes	Yes	Yes	Yes	Yes
2816	Yes	Yes	Yes	Yes	Yes	Yes
2818	Yes	Yes	Yes	Yes	Yes	Yes
2820	Yes	Yes	Yes	Yes	Yes	Yes
2822	Yes	Yes	Yes	Yes	Yes	Yes
2824	Yes	Yes	Yes	Yes	Yes	Yes
2826	Yes	Yes	Yes	Yes	Yes	Yes
2828	Yes	Yes	Yes	Yes	Yes	Yes
2830	Yes	Yes	Yes	Yes	Yes	Yes
2832	Yes	Yes	Yes	Yes	Yes	Yes
2834	Yes	Yes	Yes	Yes	Yes	Yes
2836	Yes	Yes	Yes	Yes	Yes	Yes

Table 2: Joint Restraint Assignments

Joint	U1	U2	U3	R1	R2	R3
2838	Yes	Yes	Yes	Yes	Yes	Yes
2840	Yes	Yes	Yes	Yes	Yes	Yes
2842	Yes	Yes	Yes	Yes	Yes	Yes
2844	Yes	Yes	Yes	Yes	Yes	Yes
2846	Yes	Yes	Yes	Yes	Yes	Yes
2848	Yes	Yes	Yes	Yes	Yes	Yes
2850	Yes	Yes	Yes	Yes	Yes	Yes
2852	Yes	Yes	Yes	Yes	Yes	Yes
2854	Yes	Yes	Yes	Yes	Yes	Yes
2856	Yes	Yes	Yes	Yes	Yes	Yes
2858	Yes	Yes	Yes	Yes	Yes	Yes
2860	Yes	Yes	Yes	Yes	Yes	Yes
2862	Yes	Yes	Yes	Yes	Yes	Yes
2864	Yes	Yes	Yes	Yes	Yes	Yes
2866	Yes	Yes	Yes	Yes	Yes	Yes
2868	Yes	Yes	Yes	Yes	Yes	Yes
2870	Yes	Yes	Yes	Yes	Yes	Yes
2872	Yes	Yes	Yes	Yes	Yes	Yes
2874	Yes	Yes	Yes	Yes	Yes	Yes
2876	Yes	Yes	Yes	Yes	Yes	Yes
2878	Yes	Yes	Yes	Yes	Yes	Yes
2880	Yes	Yes	Yes	Yes	Yes	Yes
2882	Yes	Yes	Yes	Yes	Yes	Yes
2884	Yes	Yes	Yes	Yes	Yes	Yes
2886	Yes	Yes	Yes	Yes	Yes	Yes
2888	Yes	Yes	Yes	Yes	Yes	Yes
2890	Yes	Yes	Yes	Yes	Yes	Yes
2892	Yes	Yes	Yes	Yes	Yes	Yes
2894	Yes	Yes	Yes	Yes	Yes	Yes
2896	Yes	Yes	Yes	Yes	Yes	Yes
2898	Yes	Yes	Yes	Yes	Yes	Yes
2900	Yes	Yes	Yes	Yes	Yes	Yes
2902	Yes	Yes	Yes	Yes	Yes	Yes
2904	Yes	Yes	Yes	Yes	Yes	Yes
2906	Yes	Yes	Yes	Yes	Yes	Yes
2908	Yes	Yes	Yes	Yes	Yes	Yes
2910	Yes	Yes	Yes	Yes	Yes	Yes
2912	Yes	Yes	Yes	Yes	Yes	Yes

Table 2: Joint Restraint Assignments

Joint	U1	U2	U3	R1	R2	R3
2914	Yes	Yes	Yes	Yes	Yes	Yes
2916	Yes	Yes	Yes	Yes	Yes	Yes
2918	Yes	Yes	Yes	Yes	Yes	Yes
2920	Yes	Yes	Yes	Yes	Yes	Yes
2922	Yes	Yes	Yes	Yes	Yes	Yes
2924	Yes	Yes	Yes	Yes	Yes	Yes
2926	Yes	Yes	Yes	Yes	Yes	Yes
2928	Yes	Yes	Yes	Yes	Yes	Yes
2930	Yes	Yes	Yes	Yes	Yes	Yes
2932	Yes	Yes	Yes	Yes	Yes	Yes
2934	Yes	Yes	Yes	Yes	Yes	Yes
2936	Yes	Yes	Yes	Yes	Yes	Yes
2938	Yes	Yes	Yes	Yes	Yes	Yes
2940	Yes	Yes	Yes	Yes	Yes	Yes
2942	Yes	Yes	Yes	Yes	Yes	Yes
2944	Yes	Yes	Yes	Yes	Yes	Yes
2946	Yes	Yes	Yes	Yes	Yes	Yes
2948	Yes	Yes	Yes	Yes	Yes	Yes
2950	Yes	Yes	Yes	Yes	Yes	Yes
2952	Yes	Yes	Yes	Yes	Yes	Yes
2954	Yes	Yes	Yes	Yes	Yes	Yes
2957	Yes	Yes	Yes	Yes	Yes	Yes
2959	Yes	Yes	Yes	Yes	Yes	Yes
2961	Yes	Yes	Yes	Yes	Yes	Yes
2963	Yes	Yes	Yes	Yes	Yes	Yes
2965	Yes	Yes	Yes	Yes	Yes	Yes
2967	Yes	Yes	Yes	Yes	Yes	Yes
2969	Yes	Yes	Yes	Yes	Yes	Yes
2971	Yes	Yes	Yes	Yes	Yes	Yes
2973	Yes	Yes	Yes	Yes	Yes	Yes
2975	Yes	Yes	Yes	Yes	Yes	Yes
2977	Yes	Yes	Yes	Yes	Yes	Yes
2979	Yes	Yes	Yes	Yes	Yes	Yes
2981	Yes	Yes	Yes	Yes	Yes	Yes
2983	Yes	Yes	Yes	Yes	Yes	Yes
2985	Yes	Yes	Yes	Yes	Yes	Yes
2987	Yes	Yes	Yes	Yes	Yes	Yes
2989	Yes	Yes	Yes	Yes	Yes	Yes

Table 2: Joint Restraint Assignments

Joint	U1	U2	U3	R1	R2	R3
2991	Yes	Yes	Yes	Yes	Yes	Yes
2993	Yes	Yes	Yes	Yes	Yes	Yes
2995	Yes	Yes	Yes	Yes	Yes	Yes
2997	Yes	Yes	Yes	Yes	Yes	Yes
2999	Yes	Yes	Yes	Yes	Yes	Yes
3001	Yes	Yes	Yes	Yes	Yes	Yes
3003	Yes	Yes	Yes	Yes	Yes	Yes
3005	Yes	Yes	Yes	Yes	Yes	Yes
3016	Yes	Yes	Yes	Yes	Yes	Yes
5228	Yes	Yes	Yes	Yes	Yes	Yes
5230	Yes	Yes	Yes	Yes	Yes	Yes

8-5-1-3 Element connectivity

Table 3: Connectivity - Frame

Table 3: Connectivity - Frame

Frame	JointI	JointJ	Length ft
134	316	320	4.5000
135	321	322	4.5000
143	327	328	4.5000
144	1405	1406	4.5000
145	332	334	4.5000
146	335	336	4.5000
147	340	342	4.5000
148	343	344	4.5000
149	345	398	4.5000
150	402	404	4.5000
151	406	407	4.5000
152	408	409	4.5000
153	410	412	4.5000
154	413	414	4.5000
155	416	415	4.5000
156	418	428	4.5000
181	429	440	4.5000

Table 3: Connectivity - Frame

Frame	JointI	JointJ	Length ft
182	441	442	4.5000
183	443	452	4.5000
184	454	455	4.5000
185	456	457	4.5000
186	458	459	4.5000
187	461	462	4.5000
189	475	465	4.5000
190	508	509	4.5000
191	524	525	4.5000
192	535	536	4.5000
197	537	538	4.5000
203	539	548	4.5000
204	549	556	4.5000
209	557	558	4.5000
210	559	560	4.5000
211	562	561	4.5000
212	563	564	4.5000
213	565	572	4.5000
214	573	578	4.5000
215	579	580	4.5000
242	581	582	4.5000
243	583	584	4.5000
244	585	586	4.5000
253	588	587	4.5000
254	589	596	4.5000
255	597	606	4.5000
256	607	656	4.5000
257	657	658	4.5000
264	659	660	4.5000
265	661	662	4.5000
266	663	666	4.5000
267	672	667	4.5000
268	673	692	4.5000
269	693	694	4.5000
278	695	696	4.5000
279	697	698	4.5000
280	699	700	4.5000
289	701	703	4.5000

Table 3: Connectivity - Frame

Frame	JointI	JointJ	Length ft
290	710	722	4.5000
291	723	728	4.5000
292	732	729	4.5000
293	733	734	4.5000
300	735	736	4.5000
301	737	739	4.5000
302	740	741	4.5000
303	742	744	4.5000
304	746	747	4.5000
305	756	757	4.5000
306	758	759	4.5000
319	761	760	4.5000
320	762	763	4.5000
321	773	774	4.5000
322	775	776	4.5000
324	777	778	4.5000
327	779	854	4.5000
331	855	858	4.5000
332	859	876	4.5000
333	877	878	4.5000
334	880	879	4.5000
335	881	882	4.5000
336	884	885	4.5000
339	886	887	4.5000
340	920	921	4.5000
346	962	963	4.5000
349	968	974	4.5000
351	980	981	4.5000
352	982	983	4.5000
353	1000	995	4.5000
354	1039	1054	4.5000
355	1068	1071	4.5000
356	1073	1074	4.5000
357	1075	1076	4.5000
358	1077	1078	4.5000
363	1079	1081	4.5000
364	1082	1083	4.5000
365	1087	1084	4.5000

Table 3: Connectivity - Frame

Frame	JointI	JointJ	Length ft
366	1088	1089	4.5000
371	1090	1091	4.5000
372	1092	1095	4.5000
373	1096	1098	4.5000
374	1407	1408	4.5000
412	1100	1101	4.5000
414	1102	1128	4.5000
423	1129	1130	4.5000
424	1131	1142	4.5000
425	1143	1144	4.5000
426	1145	1146	4.5000
427	1147	1148	4.5000
428	1149	1160	4.5000
445	1410	1411	4.5000
466	1161	1162	4.5000
469	1163	1164	4.5000
472	1165	1166	4.5000
473	1167	1168	4.5000
475	1169	1170	4.5000
476	1171	1226	4.5000
482	1227	1230	4.5000
485	1392	1393	4.5000
504	1231	1236	4.5000
512	1237	1240	4.5000
519	1241	1244	4.5000
520	1245	1248	4.5000
521	1249	1320	4.5000
522	1321	1322	4.5000
523	1323	1324	4.5000
524	1325	1326	4.5000
525	1394	1395	4.5000
526	1327	1328	4.5000
527	1329	1330	4.5000
528	1331	1332	4.5000
529	1333	1334	4.5000
530	1335	1336	4.5000
531	1338	1339	4.5000
532	1396	1397	4.5000

Table 3: Connectivity - Frame

Frame	JointI	JointJ	Length ft
533	1340	1341	4.5000
534	1342	1343	4.5000
535	1345	1346	4.5000
536	1348	1350	4.5000
549	1351	1352	4.5000
550	1398	1399	4.5000
556	1353	1357	4.5000
557	1358	1360	4.5000
558	1361	1363	4.5000
559	1364	1366	4.5000
560	1367	1369	4.5000
566	1370	1371	4.5000
567	1372	1373	4.5000
568	1374	1375	4.5000
569	1400	1402	4.5000
570	1376	1377	4.5000
571	1378	1379	4.5000
599	1380	1381	4.5000
601	1382	1383	4.5000
604	1384	1385	4.5000
606	1386	1387	4.5000
608	1403	1404	4.5000
610	1388	1389	4.5000
646	1390	1391	4.5000
647	1412	1413	4.5000
648	1414	1415	4.5000
649	1417	1418	4.5000
650	1419	1420	4.5000
651	1421	1422	4.5000
652	1423	1424	4.5000
653	1425	1426	4.5000
654	1427	1428	4.5000
655	1429	1430	4.5000
656	1431	1432	4.5000
657	1433	1434	4.5000
658	1435	1436	4.5000
659	1661	1437	4.5000
660	1663	1438	4.5000

Table 3: Connectivity - Frame

Frame	JointI	JointJ	Length ft
661	1664	1439	4.5000
662	1667	1440	4.5000
663	1670	1442	4.5000
664	1671	1443	4.5000
665	1672	1457	4.5000
666	1673	1462	4.5000
667	1676	1656	4.5000
668	1677	1657	4.5000
669	1678	1658	4.5000
670	1681	1660	4.5000
671	1696	1682	4.5000
672	1697	1683	4.5000
673	1701	1684	4.5000
674	1703	1685	4.5000
675	1704	1686	4.5000
676	1705	1687	4.5000
677	1711	1688	4.5000
678	1713	1689	4.5000
679	1714	1690	4.5000
680	1721	1691	4.5000
681	1722	1692	4.5000
682	1723	1693	4.5000
683	1724	1725	4.5000
684	1755	1757	4.5000
685	1762	1764	4.5000
686	1766	2031	4.5000
687	2181	2182	4.5000
688	2183	2184	4.5000
689	2185	2186	4.5000
690	2187	2188	4.5000
691	2189	2190	4.5000
692	2191	2192	4.5000
693	2193	2194	4.5000
694	2195	2196	4.5000
695	2197	2198	4.5000
696	2199	2200	4.5000
697	2201	2202	4.5000
698	2203	2204	4.5000

Table 3: Connectivity - Frame

Frame	JointI	JointJ	Length ft
699	2205	2206	4.5000
700	2207	2208	4.5000
701	2209	2210	4.5000
702	2211	2212	4.5000
703	2213	2214	4.5000
704	2215	2216	4.5000
705	2217	2220	4.5000
706	2222	2224	4.5000
707	2226	2228	4.5000
708	2230	2232	4.5000
709	2234	2236	4.5000
710	2238	2240	4.5000
711	2242	2246	4.5000
712	2247	2248	4.5000
713	2249	2250	4.5000
714	2251	2252	4.5000
715	2253	2254	4.5000
716	2255	2256	4.5000
717	2257	2258	4.5000
718	2259	2260	4.5000
719	2274	2276	4.5000
720	2277	2278	4.5000
721	2279	2280	4.5000
722	2281	2282	4.5000
723	2283	2284	4.5000
724	2285	2286	4.5000
725	2287	2288	4.5000
726	2289	2290	4.5000
727	2305	2306	4.5000
728	2307	2308	4.5000
729	2309	2310	4.5000
730	2311	2312	4.5000
731	2313	2314	4.5000
732	2315	2316	4.5000
733	2317	2318	4.5000
734	2319	2320	4.5000
735	2321	2322	4.5000
736	2323	2324	4.5000

Table 3: Connectivity - Frame

Frame	JointI	JointJ	Length ft
737	2325	2326	4.5000
738	2327	2328	4.5000
739	2330	2332	4.5000
740	2333	2334	4.5000
741	2335	2336	4.5000
742	570	5231	4.5000
743	2337	2338	4.5000
744	2339	2340	4.5000
745	2341	2348	4.5000
746	2358	2359	4.5000
747	2360	2361	4.5000
748	2362	2363	4.5000
749	2365	2367	4.5000
750	2369	2371	4.5000
751	2373	2378	4.5000
752	2379	2380	4.5000
753	2382	2383	4.5000
754	2384	2385	4.5000
755	2389	2392	4.5000
756	2393	2396	4.5000
757	2397	2399	4.5000
758	2402	2403	4.5000
759	2405	2408	4.5000
760	2409	2411	4.5000
761	2414	2415	4.5000
762	2417	2421	4.5000
763	2422	2425	4.5000
764	2426	2428	4.5000
765	2456	2464	4.5000
766	2466	2469	4.5000
767	2471	2486	4.5000
768	2525	2533	4.5000
769	2535	2540	4.5000
770	2542	2547	4.5000
771	2568	2588	4.5000
772	2589	2590	4.5000
773	2591	2592	4.5000
774	2593	2594	4.5000

Table 3: Connectivity - Frame

Frame	JointI	JointJ	Length ft
775	2595	2596	4.5000
776	2597	2598	4.5000
777	2599	2600	4.5000
778	2601	2602	4.5000
779	2603	2604	4.5000
780	2605	2606	4.5000
781	2607	2608	4.5000
782	2609	2610	4.5000
783	2611	2612	4.5000
784	2613	2614	4.5000
785	2615	2616	4.5000
786	2617	2618	4.5000
787	2619	2620	4.5000
788	2621	2622	4.5000
789	2623	2624	4.5000
790	2625	2626	4.5000
791	2627	2628	4.5000
792	2629	2630	4.5000
793	2631	2632	4.5000
794	2633	2634	4.5000
795	2635	2636	4.5000
796	2637	2638	4.5000
797	2639	2640	4.5000
798	2641	2642	4.5000
799	2643	2644	4.5000
800	2645	2646	4.5000
801	2647	2648	4.5000
802	2649	2650	4.5000
803	2651	2652	4.5000
804	2653	2654	4.5000
805	2655	2656	4.5000
806	2657	2658	4.5000
807	2659	2660	4.5000
808	2661	2662	4.5000
809	2663	2664	4.5000
810	2665	2666	4.5000
811	2667	2668	4.5000
812	2669	2670	4.5000

Table 3: Connectivity - Frame

Frame	JointI	JointJ	Length ft
813	2671	2672	4.5000
814	2673	2674	4.5000
815	2675	2676	4.5000
816	2677	2678	4.5000
817	2679	2680	4.5000
818	2681	2682	4.5000
819	2683	2684	4.5000
820	2685	2686	4.5000
821	2687	2688	4.5000
822	2689	2690	4.5000
823	2691	2692	4.5000
824	2693	2694	4.5000
825	2695	2696	4.5000
826	2697	2698	4.5000
827	2699	2700	4.5000
828	2701	2702	4.5000
829	2703	2704	4.5000
830	2705	2706	4.5000
831	2707	2708	4.5000
832	2709	2710	4.5000
833	2711	2712	4.5000
834	2713	2714	4.5000
835	2715	2716	4.5000
836	2717	2718	4.5000
837	2719	2720	4.5000
838	2721	2722	4.5000
839	2723	2724	4.5000
840	2725	2726	4.5000
841	2727	2728	4.5000
842	2729	2730	4.5000
843	2731	2732	4.5000
844	2733	2734	4.5000
845	2735	2736	4.5000
846	2737	2738	4.5000
847	2739	2740	4.5000
848	2741	2742	4.5000
849	2743	2744	4.5000
850	2745	2746	4.5000

Table 3: Connectivity - Frame

Frame	JointI	JointJ	Length ft
851	2747	2748	4.5000
852	2749	2750	4.5000
853	2751	2752	4.5000
854	2753	2754	4.5000
855	2755	2756	4.5000
856	2757	2758	4.5000
857	2759	2760	4.5000
858	2761	2762	4.5000
859	2763	2764	4.5000
860	2765	2766	4.5000
861	2767	2768	4.5000
862	2769	2770	4.5000
863	2771	2772	4.5000
864	2773	2774	4.5000
865	2775	2776	4.5000
866	2777	2778	4.5000
867	2779	2780	4.5000
868	2781	2782	4.5000
869	2783	2784	4.5000
870	2785	2786	4.5000
871	2787	2788	4.5000
872	2789	2790	4.5000
873	2791	2792	4.5000
874	2793	2794	4.5000
875	2795	2796	4.5000
876	2797	2798	4.5000
877	2799	2800	4.5000
878	2801	2802	4.5000
879	2803	2804	4.5000
880	2805	2806	4.5000
881	2807	2808	4.5000
882	2809	2810	4.5000
883	2811	2812	4.5000
884	2813	2814	4.5000
885	2815	2816	4.5000
886	2817	2818	4.5000
887	2819	2820	4.5000
888	2821	2822	4.5000

Table 3: Connectivity - Frame

Frame	JointI	JointJ	Length ft
889	2823	2824	4.5000
890	2825	2826	4.5000
891	2827	2828	4.5000
892	2829	2830	4.5000
893	2831	2832	4.5000
894	2833	2834	4.5000
895	2835	2836	4.5000
896	2837	2838	4.5000
897	2839	2840	4.5000
898	2841	2842	4.5000
899	2843	2844	4.5000
900	2845	2846	4.5000
901	2847	2848	4.5000
902	2849	2850	4.5000
903	2851	2852	4.5000
904	2853	2854	4.5000
905	2855	2856	4.5000
906	2857	2858	4.5000
907	2859	2860	4.5000
908	2861	2862	4.5000
909	2863	2864	4.5000
910	2865	2866	4.5000
911	2867	2868	4.5000
912	2869	2870	4.5000
913	2871	2872	4.5000
914	2873	2874	4.5000
915	2875	2876	4.5000
916	2877	2878	4.5000
917	2879	2880	4.5000
918	2881	2882	4.5000
919	2883	2884	4.5000
920	2885	2886	4.5000
921	2887	2888	4.5000
922	2889	2890	4.5000
923	2891	2892	4.5000
924	2893	2894	4.5000
925	2895	2896	4.5000
926	2897	2898	4.5000

Table 3: Connectivity - Frame

Frame	JointI	JointJ	Length ft
927	2899	2900	4.5000
928	2901	2902	4.5000
929	2903	2904	4.5000
930	2905	2906	4.5000
931	2907	2908	4.5000
932	2909	2910	4.5000
933	2911	2912	4.5000
934	2913	2914	4.5000
935	2915	2916	4.5000
936	2917	2918	4.5000
937	2919	2920	4.5000
938	2921	2922	4.5000
939	2923	2924	4.5000
940	2925	2926	4.5000
941	2927	2928	4.5000
942	2929	2930	4.5000
943	2931	2932	4.5000
944	2933	2934	4.5000
945	2935	2936	4.5000
946	2937	2938	4.5000
947	2939	2940	4.8750
948	2941	2942	4.8750
949	2943	2944	4.8750
950	2945	2946	4.8750
951	2947	2948	4.8750
952	2949	2950	4.8750
953	2951	2952	4.8750
954	2953	2954	4.8750
955	2956	2957	4.8750
956	2958	2959	4.8750
957	2960	2961	4.8750
958	2962	2963	4.8750
959	2964	2965	4.8750
960	2966	2967	4.8750
961	2968	2969	4.8750
962	2970	2971	4.8750
963	2972	2973	4.8750
964	2974	2975	4.8750

Table 3: Connectivity - Frame

Frame	JointI	JointJ	Length ft
965	2976	2977	4.8750
966	2978	2979	4.8750
967	2980	2981	4.8750
968	2982	2983	4.8750
969	2984	2985	4.8750
970	2986	2987	4.8750
971	2988	2989	4.8750
972	2990	2991	4.8750
973	2992	2993	4.8750
974	2994	2995	4.8750
975	2996	2997	4.8750
976	2998	2999	4.8750
977	3000	3001	4.8750
978	3002	3003	4.8750
979	3004	3005	4.8750
980	3015	3016	4.8750
981	2955	5228	4.8750
982	5229	5230	4.8750

Table 4: Frame Section Assignments

Note: “MatProp” item in Table 4 is either Default, or the name of a Material. Default means that the material property for the frame object is taken from the material property designated for the frame section that is assigned to the frame object.

Table 4: Frame Section Assignments

Frame	AnalSect	DesignSect	MatProp
134	12" Timber_Grid	N.A.	Default
135	12" Timber_Grid	N.A.	Default
143	12" Timber_Grid	N.A.	Default
144	12" Timber_Grid	N.A.	Default
145	12" Timber_Grid	N.A.	Default
146	12" Timber_Grid	N.A.	Default
147	12" Timber_Grid	N.A.	Default
148	12" Timber_Grid	N.A.	Default
149	12" Timber_Grid	N.A.	Default

Table 4: Frame Section Assignments

Frame	AnalSect	DesignSect	MatProp
150	12" Timber_Grid	N.A.	Default
151	12" Timber_Grid	N.A.	Default
152	12" Timber_Grid	N.A.	Default
153	12" Timber_Grid	N.A.	Default
154	12" Timber_Grid	N.A.	Default
155	12" Timber_Grid	N.A.	Default
156	12" Timber_Grid	N.A.	Default
181	12" Timber_Grid	N.A.	Default
182	12" Timber_Grid	N.A.	Default
183	12" Timber_Grid	N.A.	Default
184	12" Timber_Grid	N.A.	Default
185	12" Timber_Grid	N.A.	Default
186	12" Timber_Grid	N.A.	Default
187	12" Timber_Grid	N.A.	Default
189	12" Timber_Grid	N.A.	Default
190	12" Timber_Grid	N.A.	Default
191	12" Timber_Grid	N.A.	Default
192	12" Timber_Grid	N.A.	Default
197	12" Timber_Grid	N.A.	Default
203	12" Timber_Grid	N.A.	Default
204	12" Timber_Grid	N.A.	Default
209	12" Timber_Grid	N.A.	Default
210	12" Timber_Grid	N.A.	Default
211	12" Timber_Grid	N.A.	Default
212	12" Timber_Grid	N.A.	Default
213	12" Timber_Grid	N.A.	Default
214	12" Timber_Grid	N.A.	Default
215	12" Timber_Grid	N.A.	Default
242	12" Timber_Grid	N.A.	Default
243	12" Timber_Grid	N.A.	Default
244	12" Timber_Grid	N.A.	Default
253	12" Timber_Grid	N.A.	Default
254	12" Timber_Grid	N.A.	Default
255	12" Timber_Grid	N.A.	Default
256	12" Timber_Grid	N.A.	Default
257	12" Timber_Grid	N.A.	Default
264	12" Timber_Grid	N.A.	Default
265	12" Timber_Grid	N.A.	Default

Table 4: Frame Section Assignments

Frame	AnalSect	DesignSect	MatProp
266	12" Timber_Grid	N.A.	Default
267	12" Timber_Grid	N.A.	Default
268	12" Timber_Grid	N.A.	Default
269	12" Timber_Grid	N.A.	Default
278	12" Timber_Grid	N.A.	Default
279	12" Timber_Grid	N.A.	Default
280	12" Timber_Grid	N.A.	Default
289	12" Timber_Grid	N.A.	Default
290	12" Timber_Grid	N.A.	Default
291	12" Timber_Grid	N.A.	Default
292	12" Timber_Grid	N.A.	Default
293	12" Timber_Grid	N.A.	Default
300	12" Timber_Grid	N.A.	Default
301	12" Timber_Grid	N.A.	Default
302	12" Timber_Grid	N.A.	Default
303	12" Timber_Grid	N.A.	Default
304	12" Timber_Grid	N.A.	Default
305	12" Timber_Grid	N.A.	Default
306	12" Timber_Grid	N.A.	Default
319	12" Timber_Grid	N.A.	Default
320	12" Timber_Grid	N.A.	Default
321	12" Timber_Grid	N.A.	Default
322	12" Timber_Grid	N.A.	Default
324	12" Timber_Grid	N.A.	Default
327	12" Timber_Grid	N.A.	Default
331	12" Timber_Grid	N.A.	Default
332	12" Timber_Grid	N.A.	Default
333	12" Timber_Grid	N.A.	Default
334	12" Timber_Grid	N.A.	Default
335	12" Timber_Grid	N.A.	Default
336	12" Timber_Grid	N.A.	Default
339	12" Timber_Grid	N.A.	Default
340	12" Timber_Grid	N.A.	Default
346	12" Timber_Grid	N.A.	Default
349	12" Timber_Grid	N.A.	Default
351	12" Timber_Grid	N.A.	Default
352	12" Timber_Grid	N.A.	Default
353	12" Timber_Grid	N.A.	Default

Table 4: Frame Section Assignments

Frame	AnalSect	DesignSect	MatProp
354	12" Timber_Grid	N.A.	Default
355	12" Timber_Grid	N.A.	Default
356	12" Timber_Grid	N.A.	Default
357	12" Timber_Grid	N.A.	Default
358	12" Timber_Grid	N.A.	Default
363	12" Timber_Grid	N.A.	Default
364	12" Timber_Grid	N.A.	Default
365	12" Timber_Grid	N.A.	Default
366	12" Timber_Grid	N.A.	Default
371	12" Timber_Grid	N.A.	Default
372	12" Timber_Grid	N.A.	Default
373	12" Timber_Grid	N.A.	Default
374	12" Timber_Grid	N.A.	Default
412	12" Timber_Grid	N.A.	Default
414	12" Timber_Grid	N.A.	Default
423	12" Timber_Grid	N.A.	Default
424	12" Timber_Grid	N.A.	Default
425	12" Timber_Grid	N.A.	Default
426	12" Timber_Grid	N.A.	Default
427	12" Timber_Grid	N.A.	Default
428	12" Timber_Grid	N.A.	Default
445	12" Timber_Grid	N.A.	Default
466	12" Timber_Grid	N.A.	Default
469	12" Timber_Grid	N.A.	Default
472	12" Timber_Grid	N.A.	Default
473	12" Timber_Grid	N.A.	Default
475	12" Timber_Grid	N.A.	Default
476	12" Timber_Grid	N.A.	Default
482	12" Timber_Grid	N.A.	Default
485	12" Timber_Grid	N.A.	Default
504	12" Timber_Grid	N.A.	Default
512	12" Timber_Grid	N.A.	Default
519	12" Timber_Grid	N.A.	Default
520	12" Timber_Grid	N.A.	Default
521	12" Timber_Grid	N.A.	Default
522	12" Timber_Grid	N.A.	Default
523	12" Timber_Grid	N.A.	Default
524	12" Timber_Grid	N.A.	Default

Table 4: Frame Section Assignments

Frame	AnalSect	DesignSect	MatProp
525	12" Timber_Grid	N.A.	Default
526	12" Timber_Grid	N.A.	Default
527	12" Timber_Grid	N.A.	Default
528	12" Timber_Grid	N.A.	Default
529	12" Timber_Grid	N.A.	Default
530	12" Timber_Grid	N.A.	Default
531	12" Timber_Grid	N.A.	Default
532	12" Timber_Grid	N.A.	Default
533	12" Timber_Grid	N.A.	Default
534	12" Timber_Grid	N.A.	Default
535	12" Timber_Grid	N.A.	Default
536	12" Timber_Grid	N.A.	Default
549	12" Timber_Grid	N.A.	Default
550	12" Timber_Grid	N.A.	Default
556	12" Timber_Grid	N.A.	Default
557	12" Timber_Grid	N.A.	Default
558	12" Timber_Grid	N.A.	Default
559	12" Timber_Grid	N.A.	Default
560	12" Timber_Grid	N.A.	Default
566	12" Timber_Grid	N.A.	Default
567	12" Timber_Grid	N.A.	Default
568	12" Timber_Grid	N.A.	Default
569	12" Timber_Grid	N.A.	Default
570	12" Timber_Grid	N.A.	Default
571	12" Timber_Grid	N.A.	Default
599	12" Timber_Grid	N.A.	Default
601	12" Timber_Grid	N.A.	Default
604	12" Timber_Grid	N.A.	Default
606	12" Timber_Grid	N.A.	Default
608	12" Timber_Grid	N.A.	Default
610	12" Timber_Grid	N.A.	Default
646	12" Timber_Grid	N.A.	Default
647	12" Timber_Off Grid	N.A.	Default
648	12" Timber_Off Grid	N.A.	Default
649	12" Timber_Off Grid	N.A.	Default
650	12" Timber_Off Grid	N.A.	Default
651	12" Timber_Off Grid	N.A.	Default
652	12" Timber_Off Grid	N.A.	Default

Table 4: Frame Section Assignments

Frame	AnalSect	DesignSect	MatProp
653	12" Timber_Off Grid	N.A.	Default
654	12" Timber_Off Grid	N.A.	Default
655	12" Timber_Off Grid	N.A.	Default
656	12" Timber_Off Grid	N.A.	Default
657	12" Timber_Off Grid	N.A.	Default
658	12" Timber_Off Grid	N.A.	Default
659	12" Timber_Off Grid	N.A.	Default
660	12" Timber_Off Grid	N.A.	Default
661	12" Timber_Off Grid	N.A.	Default
662	12" Timber_Off Grid	N.A.	Default
663	12" Timber_Off Grid	N.A.	Default
664	12" Timber_Off Grid	N.A.	Default
665	12" Timber_Off Grid	N.A.	Default
666	12" Timber_Off Grid	N.A.	Default
667	12" Timber_Off Grid	N.A.	Default
668	12" Timber_Off Grid	N.A.	Default
669	12" Timber_Off Grid	N.A.	Default
670	12" Timber_Off Grid	N.A.	Default
671	12" Timber_Off Grid	N.A.	Default
672	12" Timber_Off Grid	N.A.	Default
673	12" Timber_Off Grid	N.A.	Default
674	12" Timber_Off Grid	N.A.	Default
675	12" Timber_Off Grid	N.A.	Default
676	12" Timber_Off Grid	N.A.	Default
677	12" Timber_Off Grid	N.A.	Default
678	12" Timber_Off Grid	N.A.	Default
679	12" Timber_Off Grid	N.A.	Default
680	12" Timber_Off Grid	N.A.	Default
681	12" Timber_Off Grid	N.A.	Default
682	12" Timber_Off Grid	N.A.	Default
683	12" Timber_Off Grid	N.A.	Default
684	12" Timber_Off Grid	N.A.	Default
685	12" Timber_Off Grid	N.A.	Default
686	12" Timber_Off Grid	N.A.	Default
687	12" Timber_Off Grid	N.A.	Default
688	12" Timber_Off Grid	N.A.	Default
689	12" Timber_Off Grid	N.A.	Default
690	12" Timber_Off Grid	N.A.	Default

Table 4: Frame Section Assignments

Frame	AnalSect	DesignSect	MatProp
691	12" Timber_Off Grid	N.A.	Default
692	12" Timber_Off Grid	N.A.	Default
693	12" Timber_Off Grid	N.A.	Default
694	12" Timber_Off Grid	N.A.	Default
695	12" Timber_Off Grid	N.A.	Default
696	12" Timber_Off Grid	N.A.	Default
697	12" Timber_Off Grid	N.A.	Default
698	12" Timber_Off Grid	N.A.	Default
699	12" Timber_Off Grid	N.A.	Default
700	12" Timber_Off Grid	N.A.	Default
701	12" Timber_Off Grid	N.A.	Default
702	12" Timber_Off Grid	N.A.	Default
703	12" Timber_Off Grid	N.A.	Default
704	12" Timber_Off Grid	N.A.	Default
705	12" Timber_Off Grid	N.A.	Default
706	12" Timber_Off Grid	N.A.	Default
707	12" Timber_Off Grid	N.A.	Default
708	12" Timber_Off Grid	N.A.	Default
709	12" Timber_Off Grid	N.A.	Default
710	12" Timber_Off Grid	N.A.	Default
711	12" Timber_Off Grid	N.A.	Default
712	12" Timber_Off Grid	N.A.	Default
713	12" Timber_Off Grid	N.A.	Default
714	12" Timber_Off Grid	N.A.	Default
715	12" Timber_Off Grid	N.A.	Default
716	12" Timber_Off Grid	N.A.	Default
717	12" Timber_Off Grid	N.A.	Default
718	12" Timber_Off Grid	N.A.	Default
719	12" Timber_Off Grid	N.A.	Default
720	12" Timber_Off Grid	N.A.	Default
721	12" Timber_Off Grid	N.A.	Default
722	12" Timber_Off Grid	N.A.	Default
723	12" Timber_Off Grid	N.A.	Default
724	12" Timber_Off Grid	N.A.	Default
725	12" Timber_Off Grid	N.A.	Default
726	12" Timber_Off Grid	N.A.	Default
727	12" Timber_Off Grid	N.A.	Default
728	12" Timber_Off Grid	N.A.	Default

Table 4: Frame Section Assignments

Frame	AnalSect	DesignSect	MatProp
729	12" Timber_Off Grid	N.A.	Default
730	12" Timber_Off Grid	N.A.	Default
731	12" Timber_Off Grid	N.A.	Default
732	12" Timber_Off Grid	N.A.	Default
733	12" Timber_Off Grid	N.A.	Default
734	12" Timber_Off Grid	N.A.	Default
735	12" Timber_Off Grid	N.A.	Default
736	12" Timber_Off Grid	N.A.	Default
737	12" Timber_Off Grid	N.A.	Default
738	12" Timber_Off Grid	N.A.	Default
739	12" Timber_Off Grid	N.A.	Default
740	12" Timber_Off Grid	N.A.	Default
741	12" Timber_Off Grid	N.A.	Default
742	12" Timber_Off Grid	N.A.	Default
743	12" Timber_Off Grid	N.A.	Default
744	12" Timber_Off Grid	N.A.	Default
745	12" Timber_Off Grid	N.A.	Default
746	12" Timber_Off Grid	N.A.	Default
747	12" Timber_Off Grid	N.A.	Default
748	12" Timber_Off Grid	N.A.	Default
749	12" Timber_Off Grid	N.A.	Default
750	12" Timber_Off Grid	N.A.	Default
751	12" Timber_Off Grid	N.A.	Default
752	12" Timber_Off Grid	N.A.	Default
753	12" Timber_Off Grid	N.A.	Default
754	12" Timber_Off Grid	N.A.	Default
755	12" Timber_Off Grid	N.A.	Default
756	12" Timber_Off Grid	N.A.	Default
757	12" Timber_Off Grid	N.A.	Default
758	12" Timber_Off Grid	N.A.	Default
759	12" Timber_Off Grid	N.A.	Default
760	12" Timber_Off Grid	N.A.	Default
761	12" Timber_Off Grid	N.A.	Default
762	12" Timber_Off Grid	N.A.	Default
763	12" Timber_Off Grid	N.A.	Default
764	12" Timber_Off Grid	N.A.	Default
765	12" Timber_Off Grid	N.A.	Default
766	12" Timber_Off Grid	N.A.	Default

Table 4: Frame Section Assignments

Frame	AnalSect	DesignSect	MatProp
767	12" Timber_Off Grid	N.A.	Default
768	12" Timber_Off Grid	N.A.	Default
769	12" Timber_Off Grid	N.A.	Default
770	12" Timber_Off Grid	N.A.	Default
771	12" Timber_Off Grid	N.A.	Default
772	12" Timber_Off Grid	N.A.	Default
773	12" Timber_Off Grid	N.A.	Default
774	12" Timber_Off Grid	N.A.	Default
775	12" Timber_Off Grid	N.A.	Default
776	12" Timber_Off Grid	N.A.	Default
777	12" Timber_Off Grid	N.A.	Default
778	12" Timber_Off Grid	N.A.	Default
779	12" Timber_Off Grid	N.A.	Default
780	12" Timber_Off Grid	N.A.	Default
781	12" Timber_Off Grid	N.A.	Default
782	12" Timber_Off Grid	N.A.	Default
783	12" Timber_Off Grid	N.A.	Default
784	12" Timber_Off Grid	N.A.	Default
785	12" Timber_Off Grid	N.A.	Default
786	12" Timber_Off Grid	N.A.	Default
787	12" Timber_Off Grid	N.A.	Default
788	12" Timber_Off Grid	N.A.	Default
789	12" Timber_Off Grid	N.A.	Default
790	12" Timber_Off Grid	N.A.	Default
791	12" Timber_Off Grid	N.A.	Default
792	12" Timber_Off Grid	N.A.	Default
793	12" Timber_Off Grid	N.A.	Default
794	12" Timber_Off Grid	N.A.	Default
795	12" Timber_Off Grid	N.A.	Default
796	12" Timber_Off Grid	N.A.	Default
797	12" Timber_Off Grid	N.A.	Default
798	12" Timber_Off Grid	N.A.	Default
799	12" Timber_Off Grid	N.A.	Default
800	12" Timber_Off Grid	N.A.	Default
801	12" Timber_Off Grid	N.A.	Default
802	12" Timber_Off Grid	N.A.	Default
803	12" Timber_Off Grid	N.A.	Default
804	12" Timber_Off Grid	N.A.	Default

Table 4: Frame Section Assignments

Frame	AnalSect	DesignSect	MatProp
805	12" Timber_Off Grid	N.A.	Default
806	12" Timber_Off Grid	N.A.	Default
807	12" Timber_Off Grid	N.A.	Default
808	12" Timber_Off Grid	N.A.	Default
809	12" Timber_Off Grid	N.A.	Default
810	12" Timber_Off Grid	N.A.	Default
811	12" Timber_Off Grid	N.A.	Default
812	12" Timber_Off Grid	N.A.	Default
813	12" Timber_Off Grid	N.A.	Default
814	12" Timber_Off Grid	N.A.	Default
815	12" Timber_Off Grid	N.A.	Default
816	12" Timber_Off Grid	N.A.	Default
817	12" Timber_Off Grid	N.A.	Default
818	12" Timber_Off Grid	N.A.	Default
819	12" Timber_Off Grid	N.A.	Default
820	12" Timber_Off Grid	N.A.	Default
821	12" Timber_Off Grid	N.A.	Default
822	12" Timber_Off Grid	N.A.	Default
823	12" Timber_Off Grid	N.A.	Default
824	12" Timber_Off Grid	N.A.	Default
825	12" Timber_Off Grid	N.A.	Default
826	12" Timber_Off Grid	N.A.	Default
827	12" Timber_Off Grid	N.A.	Default
828	12" Timber_Off Grid	N.A.	Default
829	12" Timber_Off Grid	N.A.	Default
830	12" Timber_Off Grid	N.A.	Default
831	12" Timber_Off Grid	N.A.	Default
832	12" Timber_Off Grid	N.A.	Default
833	12" Timber_Off Grid	N.A.	Default
834	12" Timber_Off Grid	N.A.	Default
835	12" Timber_Off Grid	N.A.	Default
836	12" Timber_Off Grid	N.A.	Default
837	12" Timber_Off Grid	N.A.	Default
838	12" Timber_Off Grid	N.A.	Default
839	12" Timber_Off Grid	N.A.	Default
840	12" Timber_Off Grid	N.A.	Default
841	12" Timber_Off Grid	N.A.	Default
842	12" Timber_Off Grid	N.A.	Default

Table 4: Frame Section Assignments

Frame	AnalSect	DesignSect	MatProp
843	12" Timber_Off Grid	N.A.	Default
844	12" Timber_Off Grid	N.A.	Default
845	12" Timber_Off Grid	N.A.	Default
846	12" Timber_Off Grid	N.A.	Default
847	12" Timber_Off Grid	N.A.	Default
848	12" Timber_Off Grid	N.A.	Default
849	12" Timber_Off Grid	N.A.	Default
850	12" Timber_Off Grid	N.A.	Default
851	12" Timber_Off Grid	N.A.	Default
852	12" Timber_Off Grid	N.A.	Default
853	12" Timber_Off Grid	N.A.	Default
854	12" Timber_Off Grid	N.A.	Default
855	12" Timber_Off Grid	N.A.	Default
856	12" Timber_Off Grid	N.A.	Default
857	12" Timber_Off Grid	N.A.	Default
858	12" Timber_Off Grid	N.A.	Default
859	12" Timber_Off Grid	N.A.	Default
860	12" Timber_Off Grid	N.A.	Default
861	12" Timber_Off Grid	N.A.	Default
862	12" Timber_Off Grid	N.A.	Default
863	12" Timber_Off Grid	N.A.	Default
864	12" Timber_Off Grid	N.A.	Default
865	12" Timber_Off Grid	N.A.	Default
866	12" Timber_Off Grid	N.A.	Default
867	12" Timber_Off Grid	N.A.	Default
868	12" Timber_Off Grid	N.A.	Default
869	12" Timber_Off Grid	N.A.	Default
870	12" Timber_Off Grid	N.A.	Default
871	12" Timber_Off Grid	N.A.	Default
872	12" Timber_Off Grid	N.A.	Default
873	12" Timber_Off Grid	N.A.	Default
874	12" Timber_Off Grid	N.A.	Default
875	12" Timber_Off Grid	N.A.	Default
876	12" Timber_Off Grid	N.A.	Default
877	12" Timber_Off Grid	N.A.	Default
878	12" Timber_Off Grid	N.A.	Default
879	12" Timber_Off Grid	N.A.	Default
880	12" Timber_Off Grid	N.A.	Default

Table 4: Frame Section Assignments

Frame	AnalSect	DesignSect	MatProp
881	12" Timber_Off Grid	N.A.	Default
882	12" Timber_Off Grid	N.A.	Default
883	12" Timber_Off Grid	N.A.	Default
884	12" Timber_Off Grid	N.A.	Default
885	12" Timber_Off Grid	N.A.	Default
886	12" Timber_Off Grid	N.A.	Default
887	12" Timber_Off Grid	N.A.	Default
888	12" Timber_Off Grid	N.A.	Default
889	12" Timber_Off Grid	N.A.	Default
890	12" Timber_Off Grid	N.A.	Default
891	12" Timber_Off Grid	N.A.	Default
892	12" Timber_Off Grid	N.A.	Default
893	12" Timber_Off Grid	N.A.	Default
894	12" Timber_Off Grid	N.A.	Default
895	12" Timber_Off Grid	N.A.	Default
896	12" Timber_Off Grid	N.A.	Default
897	12" Timber_Off Grid	N.A.	Default
898	12" Timber_Off Grid	N.A.	Default
899	12" Timber_Off Grid	N.A.	Default
900	12" Timber_Off Grid	N.A.	Default
901	12" Timber_Off Grid	N.A.	Default
902	12" Timber_Off Grid	N.A.	Default
903	12" Timber_Off Grid	N.A.	Default
904	12" Timber_Off Grid	N.A.	Default
905	12" Timber_Off Grid	N.A.	Default
906	12" Timber_Off Grid	N.A.	Default
907	12" Timber_Off Grid	N.A.	Default
908	12" Timber_Off Grid	N.A.	Default
909	12" Timber_Off Grid	N.A.	Default
910	12" Timber_Off Grid	N.A.	Default
911	12" Timber_Off Grid	N.A.	Default
912	12" Timber_Off Grid	N.A.	Default
913	12" Timber_Off Grid	N.A.	Default
914	12" Timber_Off Grid	N.A.	Default
915	12" Timber_Off Grid	N.A.	Default
916	12" Timber_Off Grid	N.A.	Default
917	12" Timber_Off Grid	N.A.	Default
918	12" Timber_Off Grid	N.A.	Default

Table 4: Frame Section Assignments

Frame	AnalSect	DesignSect	MatProp
919	12" Timber_Off Grid	N.A.	Default
920	12" Timber_Off Grid	N.A.	Default
921	12" Timber_Off Grid	N.A.	Default
922	12" Timber_Off Grid	N.A.	Default
923	12" Timber_Off Grid	N.A.	Default
924	12" Timber_Off Grid	N.A.	Default
925	12" Timber_Off Grid	N.A.	Default
926	12" Timber_Off Grid	N.A.	Default
927	12" Timber_Off Grid	N.A.	Default
928	12" Timber_Off Grid	N.A.	Default
929	12" Timber_Off Grid	N.A.	Default
930	12" Timber_Off Grid	N.A.	Default
931	12" Timber_Off Grid	N.A.	Default
932	12" Timber_Off Grid	N.A.	Default
933	12" Timber_Off Grid	N.A.	Default
934	12" Timber_Off Grid	N.A.	Default
935	12" Timber_Off Grid	N.A.	Default
936	12" Timber_Off Grid	N.A.	Default
937	12" Timber_Off Grid	N.A.	Default
938	12" Timber_Off Grid	N.A.	Default
939	12" Timber_Off Grid	N.A.	Default
940	12" Timber_Off Grid	N.A.	Default
941	12" Timber_Off Grid	N.A.	Default
942	12" Timber_Off Grid	N.A.	Default
943	12" Timber_Off Grid	N.A.	Default
944	12" Timber_Off Grid	N.A.	Default
945	12" Timber_Off Grid	N.A.	Default
946	12" Timber_Off Grid	N.A.	Default
947	12" Timber_Batter	N.A.	Default
948	12" Timber_Batter	N.A.	Default
949	12" Timber_Batter	N.A.	Default
950	12" Timber_Batter	N.A.	Default
951	12" Timber_Batter	N.A.	Default
952	12" Timber_Batter	N.A.	Default
953	12" Timber_Batter	N.A.	Default
954	12" Timber_Batter	N.A.	Default
955	12" Timber_Batter	N.A.	Default
956	12" Timber_Batter	N.A.	Default

Table 4: Frame Section Assignments

Frame	AnalSect	DesignSect	MatProp
957	12" Timber_Batter	N.A.	Default
958	12" Timber_Batter	N.A.	Default
959	12" Timber_Batter	N.A.	Default
960	12" Timber_Batter	N.A.	Default
961	12" Timber_Batter	N.A.	Default
962	12" Timber_Batter	N.A.	Default
963	12" Timber_Batter	N.A.	Default
964	12" Timber_Batter	N.A.	Default
965	12" Timber_Batter	N.A.	Default
966	12" Timber_Batter	N.A.	Default
967	12" Timber_Batter	N.A.	Default
968	12" Timber_Batter	N.A.	Default
969	12" Timber_Batter	N.A.	Default
970	12" Timber_Batter	N.A.	Default
971	12" Timber_Batter	N.A.	Default
972	12" Timber_Batter	N.A.	Default
973	12" Timber_Batter	N.A.	Default
974	12" Timber_Batter	N.A.	Default
975	12" Timber_Batter	N.A.	Default
976	12" Timber_Batter	N.A.	Default
977	12" Timber_Batter	N.A.	Default
978	12" Timber_Batter	N.A.	Default
979	12" Timber_Batter	N.A.	Default
980	12" Timber_Batter	N.A.	Default
981	12" Timber_Batter	N.A.	Default
982	12" Timber_Batter	N.A.	Default

Table 5: Connectivity - Solid, Part 1 of 2

Table 5: Connectivity - Solid, Part 1 of 2

Solid	Joint1	Joint2	Joint3	Joint4
1	607	657	697	699
2	657	659	699	701
3	659	661	701	710
4	661	663	710	723
5	663	672	723	732

Table 5: Connectivity - Solid, Part 1 of 2

Solid	Joint1	Joint2	Joint3	Joint4
6	597	607	695	697
7	565	573	597	607
8	573	579	607	657
9	579	581	657	659
10	581	583	659	661
11	583	585	661	663
12	585	588	663	672
13	588	3006	672	673
14	672	673	732	733
15	562	563	588	3006
16	535	537	565	573
17	537	539	573	579
18	539	549	579	581
19	549	557	581	583
20	557	559	583	585
21	559	562	585	588
22	697	699	740	742
23	699	701	742	746
24	701	710	746	756
25	710	723	756	758
26	723	732	758	761
27	695	697	737	740
28	441	443	535	537
29	443	454	537	539
30	454	456	539	549
31	456	458	549	557
32	458	461	557	559
33	461	475	559	562
34	475	508	562	563
35	429	441	524	535
36	524	535	3007	565
37	3007	565	589	597
38	589	597	693	695
39	402	406	443	454
40	406	408	454	456
41	408	410	456	458
42	410	413	458	461
43	413	416	461	475

Table 5: Connectivity - Solid, Part 1 of 2

Solid	Joint1	Joint2	Joint3	Joint4
44	345	402	441	443
45	742	746	779	855
46	746	756	855	859
47	756	758	859	877
48	740	742	777	779
49	2703	2891	2863	2701
50	2899	962	2703	2891
51	2907	968	2705	2899
52	2705	2899	2865	2703
53	2915	980	2707	2907
54	2879	982	2709	2915
55	2907	2705	2707	2867
56	2705	2865	2867	855
57	2867	855	859	859
58	2865	779	855	855
59	2703	2863	2865	779
60	2863	777	779	779
61	2707	2867	2869	859
62	2915	2707	2709	2869
63	2711	2879	2873	2709
64	2713	2847	2841	2711
65	2683	2935	2933	2713
66	2841	2711	880	2873
67	2933	2713	881	2841
68	2929	2683	1364	2933
69	2873	877	880	2871
70	2709	2869	2873	877
71	2869	859	877	877
72	2841	880	881	2839
73	2839	880	2695	2871
74	1364	2933	2931	881
75	2931	881	2693	2839
76	2693	2839	2829	2695
77	2679	2931	2825	2693
78	2927	1364	2679	2931
79	2677	2927	2821	2679
80	2817	2677	1380	2821
81	2821	2679	1361	2825

Table 5: Connectivity - Solid, Part 1 of 2

Solid	Joint1	Joint2	Joint3	Joint4
82	1380	2821	2819	1361
83	2815	1380	2669	2819
84	2667	2815	2805	2669
85	2825	2693	762	2829
86	2829	761	762	2827
87	1361	2825	2823	762
88	2819	1361	2671	2823
89	2669	2819	2809	2671
90	2823	762	2687	2827
91	2671	2823	2813	2687
92	2809	2671	1358	2813
93	2805	2669	1378	2809
94	1390	2805	2803	1378
95	1378	2809	2807	1358
96	2807	2659	2657	2797
97	2803	1378	2657	2807
98	1358	2811	2807	2659
99	2797	2659	1353	2801
100	1376	2797	2795	1353
101	2793	2657	1376	2797
102	2655	2803	2793	2657
103	1388	2793	2791	1376
104	2791	1376	2645	2795
105	2795	1353	2647	2799
106	2645	2795	1400	2647
107	2643	2791	1403	2645
108	1403	2645	2633	1400
109	2633	1400	2619	2635
110	1400	2647	2635	1398
111	2631	1403	2623	2633
112	2847	1000	2711	2879
113	1039	2847	2935	2713
114	1000	2881	2879	982
115	1039	2849	2847	1000
116	982	2917	2915	980
117	980	2909	2907	968
118	968	2901	2899	962
119	962	2893	2891	920

Table 5: Connectivity - Solid, Part 1 of 2

Solid	Joint1	Joint2	Joint3	Joint4
120	2891	920	2701	2875
121	2863	2701	777	2861
122	2701	2875	2861	2699
123	2875	886	2699	2851
124	886	2853	2851	884
125	2861	2699	775	2845
126	777	2861	2859	775
127	2691	2843	2835	2689
128	2859	775	2691	2843
129	775	2845	2843	773
130	2843	773	2689	2787
131	773	2789	2787	1245
132	2845	2697	773	2789
133	2699	2851	2845	2697
134	2851	884	2697	2923
135	2697	2923	2789	2681
136	2789	2681	1245	2785
137	2787	1245	2675	2783
138	2689	2787	2781	2675
139	2835	2689	735	2781
140	2837	2691	737	2835
141	737	2835	2833	735
142	2833	735	2685	2779
143	735	2781	2779	1241
144	2781	2675	1241	2777
145	2675	2783	2777	2673
146	2777	2673	1331	2773
147	1241	2777	2775	1331
148	2779	1241	2665	2775
149	2685	2779	2769	2665
150	2769	2665	1237	2765
151	2665	2775	2765	2663
152	2775	1331	2663	2771
153	693	2769	2767	1237
154	1237	2765	2763	1329
155	2765	2663	1329	2761
156	2663	2771	2761	2661
157	1329	2761	2759	1342

Table 5: Connectivity - Solid, Part 1 of 2

Solid	Joint1	Joint2	Joint3	Joint4
158	2763	1329	2651	2759
159	2767	1237	2653	2763
160	2653	2763	2753	2651
161	2757	2653	1231	2753
162	2755	1231	2641	2751
163	1231	2753	2751	1327
164	2753	2651	1327	2749
165	2651	2759	2749	2649
166	1327	2749	2747	1340
167	2751	1327	2639	2747
168	2641	2751	1394	2639
169	1394	2639	2627	1396
170	2639	2747	1396	2637
171	2627	1396	2621	2625
172	2629	1394	2617	2627
173	1392	2641	2629	1394
174	2613	2629	1227	1227
175	1227	2629	2617	2617
176	2617	2627	1325	1325
177	1325	2627	2621	2621
178	2621	2625	1338	1338
179	2767	2653	2757	2757
180	2755	2757	1231	1231
181	2755	2641	1392	1392
182	1392	2629	2613	2613
183	1325	2621	2321	2319
184	2315	2617	2321	1325
185	2317	1227	2315	2617
186	2319	1338	1335	1335
187	2613	2251	2601	2601
188	2621	1338	2319	2319
189	2613	1227	2251	2317
190	2321	2319	2609	1335
191	1323	2315	2609	2321
192	2605	2317	1323	2315
193	1171	2251	2605	2317
194	2601	2251	1171	1171
195	2305	2609	2597	2289

Table 5: Connectivity - Solid, Part 1 of 2

Solid	Joint1	Joint2	Joint3	Joint4
196	2285	1323	1321	2305
197	2287	2605	2593	2285
198	2234	1171	1169	2287
199	2238	2601	2589	2234
200	2289	1335	1333	1333
201	2609	1335	2289	2289
202	1323	2609	2305	2305
203	2605	1323	2285	2285
204	1171	2605	2287	2287
205	2601	1171	2234	2234
206	2238	2589	343	343
207	2230	2238	343	343
208	2542	2230	343	343
209	345	2230	2542	2542
210	2593	1321	2279	2283
211	1169	2593	2281	2279
212	2589	1169	2211	2281
213	343	2589	2213	2211
214	2542	343	2207	2213
215	345	2542	2209	2207
216	1321	2597	2283	2283
217	2597	2289	1333	1333
218	1321	2305	2597	2597
219	2593	2285	1321	1321
220	1169	2287	2593	2593
221	2589	2234	1169	1169
222	1249	2281	2181	2525
223	2466	2211	1762	1249
224	1143	2213	1766	2466
225	2402	2207	1724	1143
226	1145	2209	1755	2402
227	2405	2199	1696	1145
228	1147	2201	1697	2405
229	2281	2279	2525	2525
230	2211	2281	1249	1249
231	2213	2211	2466	2466
232	2207	2213	1143	1143
233	2209	2207	2402	2402

Table 5: Connectivity - Solid, Part 1 of 2

Solid	Joint1	Joint2	Joint3	Joint4
234	2199	345	1145	2209
235	1766	2466	2393	1762
236	1724	1143	1088	1766
237	1755	2402	2362	1724
238	1696	1145	1090	1755
239	1697	2405	2365	1696
240	1701	1147	1092	1697
241	1703	2409	2369	1701
242	1704	1149	1096	1703
243	1705	2414	2373	1704
244	1711	1410	1407	1705
245	1713	2417	2379	1711
246	1714	1161	1100	1713
247	1721	2422	2382	1714
248	1722	1163	1102	1721
249	1723	2426	2384	1722
250	2183	1165	1129	1723
251	1407	1705	1671	2373
252	2379	1711	1672	1407
253	1100	1713	1673	2379
254	2382	1714	1676	1100
255	1102	1721	1677	2382
256	2384	1722	1678	1102
257	1129	1723	1681	2384
258	2195	1129	340	1681
259	2197	2389	2360	2195
260	2389	2183	2195	1129
261	1681	2384	2358	1678
262	340	1681	1435	2358
263	1678	1102	335	1677
264	1677	2382	2341	1676
265	1676	1100	332	1673
266	1673	2379	2339	1672
267	1672	1407	1405	1671
268	1671	2373	2337	1670
269	2373	1704	1670	1096
270	1670	1096	327	1667
271	1096	1703	1667	2369

Table 5: Connectivity - Solid, Part 1 of 2

Solid	Joint1	Joint2	Joint3	Joint4
272	1667	2369	570	1664
273	2369	1701	1664	1092
274	1092	1697	1663	2365
275	1664	1092	321	1663
276	1663	2365	2335	1661
277	2365	1696	1661	1090
278	1090	1755	2193	2362
279	2362	1724	2191	1088
280	2193	2362	2333	2191
281	1661	1090	316	2193
282	321	1663	1414	2335
283	327	1667	1419	570
284	2337	1670	1421	327
285	1405	1671	1423	2337
286	2339	1672	1425	1405
287	332	1673	1427	2339
288	2341	1676	1429	332
289	2358	1678	1433	335
290	1414	2335	1412	1412
291	1417	321	1414	1414
292	1419	570	1417	1417
293	1423	2337	1421	1421
294	1427	2339	1425	1425
295	1431	2341	1429	1429
296	1433	335	1431	1431
297	1435	2358	1433	1433
298	2335	1661	1412	316
299	316	2193	2333	2333
300	316	2333	1412	1412
301	1088	1766	2393	2393
302	2191	1088	2393	2393
303	2191	2393	2333	2333
304	1762	1249	2181	2181
305	1762	2181	2393	2393
306	2525	2279	2283	2283
307	2525	2283	2181	2181
308	2393	2181	2333	2333
309	2283	2597	1333	1333

Table 5: Connectivity - Solid, Part 1 of 2

Solid	Joint1	Joint2	Joint3	Joint4
310	2195	340	2360	2360
311	2360	340	1435	1435
312	2456	2183	2185	2389
313	1131	2185	2197	2389
314	1167	2185	2187	1131
315	2189	2471	2397	2187
316	2397	2187	1131	1131
317	2397	1131	2197	2197
318	2397	2197	2360	2360
319	2201	2199	2405	2405
320	1149	2409	1703	1703
321	2414	1149	1704	1704
322	1410	2414	1705	1705
323	2417	1410	1711	1711
324	1161	2417	1713	1713
325	2422	1161	1714	1714
326	2203	1163	2426	1722
327	2205	2426	1165	1723
328	2215	1165	2456	2183
329	2217	2456	1167	2185
330	2222	1167	2471	2187
331	1367	2226	2189	2471
332	2201	345	2199	2199
333	2230	2601	2238	2238
334	2215	416	1165	2205
335	2217	2568	2456	2215
336	2222	418	1167	2217
337	2226	2591	2471	2222
338	2259	1345	1367	2226
339	2274	2595	2535	2259
340	2599	1370	2277	2274
341	2535	2259	1367	1367
342	2535	1367	2189	2189
343	2535	2189	2397	2397
344	1382	2599	2277	2277
345	2277	2274	2535	2535
346	418	2242	2217	2568
347	2591	2247	2222	418

Table 5: Connectivity - Solid, Part 1 of 2

Solid	Joint1	Joint2	Joint3	Joint4
348	1345	2249	2226	2591
349	2595	2307	2259	1345
350	1370	2309	2274	2595
351	2599	2311	1370	1370
352	1382	2313	2599	2599
353	2257	2615	2603	2255
354	2323	1351	1348	2257
355	2325	2619	2607	2323
356	2327	1374	1372	2325
357	2330	2623	2611	2327
358	1374	2633	2619	2619
359	2623	2633	1374	1374
360	1374	2619	2325	2325
361	2623	1374	2327	2327
362	2619	2635	1351	1351
363	1351	2615	2257	2257
364	1348	2257	2249	2603
365	2607	2323	2307	1348
366	1372	2325	2309	2607
367	2611	2327	2311	1372
368	2313	2611	2599	2311
369	2311	1372	1370	2309
370	2309	2607	2595	2307
371	2307	1348	1345	2249
372	2249	2603	2591	2247
373	2247	508	418	2242
374	2603	2255	2247	508
375	2568	416	2215	2215
376	416	2203	2205	2205
377	2205	2203	2426	2426
378	2242	416	2568	2568
379	508	416	2242	2242
380	2277	2535	2397	2397
381	2619	1351	2323	2323
382	1384	2330	2313	2611
383	1384	2313	1382	1382
384	2631	2623	1386	1386
385	1386	2623	2330	2330

Table 5: Connectivity - Solid, Part 1 of 2

Solid	Joint1	Joint2	Joint3	Joint4
386	1386	2330	1384	1384
387	2635	2615	1351	1351
388	2635	1398	2615	2615
389	2647	2799	1398	1398
390	1353	2801	2799	2799
391	2643	1388	2791	2791
392	2643	1403	2631	2631
393	2659	2811	2801	2801
394	1358	2813	2811	2811
395	2655	2793	1388	1388
396	1390	2803	2655	2655
397	2667	2805	1390	1390
398	2817	1380	2815	2815
399	2817	2815	2667	2667
400	2929	1364	2927	2927
401	2929	2927	2677	2677
402	2929	2677	2817	2817
403	2813	2687	2811	2811
404	2829	2695	761	2831
405	2695	2871	2831	2831
406	2871	877	2831	2831
407	2859	2691	2837	2837
408	2685	2769	693	693
409	2833	2685	693	693
410	737	2833	693	693
411	737	693	695	695
412	777	2859	2837	2837
413	2837	737	740	740
414	777	2837	740	740
415	2831	758	761	761
416	2827	761	732	732
417	2811	733	315	315
418	2801	673	2799	2799
419	2811	315	2801	673
420	2799	3006	1398	1398
421	1398	563	2615	2615
422	2615	563	2255	2255
423	2255	563	314	314

Table 5: Connectivity - Solid, Part 1 of 2

Solid	Joint1	Joint2	Joint3	Joint4
424	2255	314	508	508
425	508	475	416	416
426	416	413	2203	2203
427	1149	406	2409	2409
428	408	406	2414	2414
429	410	408	2417	2417
430	413	410	2422	2422
431	2422	410	1161	1161
432	1161	410	2417	2417
433	2417	408	1410	1410
434	1410	408	2414	2414
435	2414	406	1149	1149
436	406	402	2409	2409
437	402	2201	2409	2409
438	402	345	2201	2201
439	2203	413	2422	2422
440	441	429	2230	2230
441	441	2230	345	345
442	429	2601	2230	2230
443	524	2613	2253	2253
444	2253	2613	2601	2601
445	524	2253	429	429
446	2253	2601	313	313
447	429	2253	313	313
448	429	313	2601	2601
449	589	2757	2755	2755
450	3007	1392	524	2613
451	589	2755	3007	1392
452	693	2767	589	2757
453	2761	2661	1342	1342
454	2759	1342	2649	2649
455	2749	2649	1340	1340
456	2747	1340	2637	2637
457	1396	2637	2625	2625
458	2831	877	758	758
459	2799	673	3006	3006
460	1398	3006	563	563
461	2687	2827	733	733

Table 5: Connectivity - Solid, Part 1 of 2

Solid	Joint1	Joint2	Joint3	Joint4
462	2811	2687	733	733
463	733	2827	732	732
464	2773	2771	1331	1331
465	2773	2661	2771	2771
466	1245	2785	2783	2783
467	2785	2673	2783	2783
468	2785	2773	2673	2673
469	920	2877	2875	886
470	2683	2937	2935	2935
471	2929	2937	2683	2683
472	2937	1039	2935	2935
473	2937	2849	1039	1039
474	2937	2731	2849	2849
475	2853	2925	884	884
476	884	2925	2923	2923
477	2923	2925	2681	2681
478	2925	2785	2681	2681
479	2853	2715	2925	2925
480	2857	2715	3004	3004
481	962	2939	2893	2893
482	920	2945	2877	2877
483	2917	2966	980	980
484	982	772	2917	2917
485	2881	2968	982	982
486	2849	2976	1000	1000
487	2731	2978	2849	2849
488	2978	2976	2849	2849
489	886	3000	2853	2853
490	2853	3004	2715	2715
491	886	2717	3000	3000
492	2717	3002	3000	3000
493	3002	2857	3000	2853
494	2857	3004	2853	2853
495	2877	2996	886	886
496	2719	2947	2945	2945
497	2721	2941	2939	2939
498	2903	2988	2901	2901
499	2986	2911	2909	2909

Table 5: Connectivity - Solid, Part 1 of 2

Solid	Joint1	Joint2	Joint3	Joint4
500	2958	2725	2966	2966
501	2982	2919	2917	2917
502	2962	2727	2968	2968
503	2972	2887	2881	2881
504	2974	2729	2976	2976
505	2978	2855	2976	2976
506	2731	2855	2978	2978
507	2855	2974	2976	2976
508	2976	2729	1000	1000
509	2729	2972	1000	1000
510	1000	2972	2881	2881
511	2970	2887	2972	2972
512	2974	1087	2729	2729
513	1087	2970	2729	2972
514	2745	2970	1087	1087
515	2974	2745	1087	1087
516	2855	2745	2974	2974
517	2731	2745	2855	2855
518	2937	2745	2731	2731
519	2996	2717	886	886
520	2883	2998	2996	2996
521	2947	2883	2945	2877
522	2883	2996	2877	2877
523	920	2719	2945	2945
524	2939	2941	2893	2895
525	2895	2992	2893	2893
526	2893	2992	920	920
527	2994	1073	2992	2719
528	2943	2897	2941	2895
529	2953	2905	2951	2903
530	2913	2956	2911	2955
531	2921	2960	2919	2958
532	2889	2964	2887	2962
533	2970	2889	2887	2887
534	2887	2962	2881	2968
535	2745	2889	2970	2970
536	2964	2743	1082	883
537	2964	1082	2962	2727

Table 5: Connectivity - Solid, Part 1 of 2

Solid	Joint1	Joint2	Joint3	Joint4
538	1082	2980	2727	2982
539	2980	2919	2982	2982
540	2968	2727	982	982
541	2727	772	982	982
542	2727	2982	772	772
543	2982	2917	772	772
544	2919	2958	2917	2966
545	2966	2725	980	980
546	980	2986	2909	2909
547	2725	2986	980	980
548	1079	2984	2725	2986
549	2958	1079	2725	2725
550	2984	2911	2986	2986
551	2984	2913	2911	2911
552	1079	2741	2984	2984
553	2960	1079	2958	2958
554	1082	883	2980	2980
555	2949	2885	2947	2883
556	2885	2998	2883	2883
557	2885	1068	2998	2998
558	2998	1068	2996	2717
559	1068	3002	2717	2717
560	1068	2857	3002	3002
561	2990	1075	2988	2721
562	2955	1077	2723	2951
563	2739	2953	2956	1077
564	1077	2953	2951	2951
565	2956	1077	2955	2955
566	2960	2741	1079	1079
567	2911	2955	2909	2909
568	2909	2955	2723	2723
569	2901	2988	962	962
570	962	2721	2939	2939
571	2988	2721	962	962
572	2721	1075	2941	2941
573	1075	2943	2941	2941
574	1075	2737	2943	2943
575	2903	2990	2988	2988

Table 5: Connectivity - Solid, Part 1 of 2

Solid	Joint1	Joint2	Joint3	Joint4
576	2903	2905	2990	2990
577	2905	2737	1075	1075
578	2905	1075	2990	2990
579	2741	2913	2984	2984
580	2921	2741	2960	2960
581	2743	2741	2921	2921
582	2743	2921	883	883
583	883	2919	2980	2980
584	883	2921	2919	2919
585	2889	2743	2964	2964
586	2745	2743	2889	2889
587	2737	2897	2943	2943
588	1073	2947	2719	2719
589	2992	2719	920	920
590	2895	2994	2992	2992
591	2897	2994	2895	2895
592	1073	2949	2947	2947
593	2913	2739	2956	2956
594	2741	2739	2913	2913
595	2739	2905	2953	2953
596	2739	2737	2905	2905
597	1073	2735	2949	2949
598	2994	2735	1073	1073
599	2897	2735	2994	2994
600	2737	2735	2897	2897
601	2735	2885	2949	2949
602	2885	2733	1068	1068
603	2735	2733	2885	2885
604	1068	2733	2857	2857
605	2733	2715	2857	2857
606	2733	2925	2715	2715
607	2277	2397	2360	2360
608	327	1419	3008	3008
609	1421	327	3008	3008
610	3010	1405	1423	1423
611	1425	1405	3010	3010
612	3009	332	1427	1427
613	1429	332	3009	3009

Table 5: Connectivity - Solid, Part 1 of 2

Solid	Joint1	Joint2	Joint3	Joint4
614	1664	321	3012	3012
615	570	1664	3012	3012
616	3012	321	1417	1417
617	570	3012	1417	1417
618	3011	1677	2341	2341
619	335	1677	3011	3011
620	3011	2341	1431	1431
621	335	3011	1431	1431
622	2201	1147	3013	3013
623	2409	3013	1701	1701
624	3013	1147	1701	1701
625	3014	2422	1721	1721
626	1163	3014	1721	1721
627	2203	3014	1163	1163
628	2203	2422	3014	3014
629	2409	2201	3013	3013
630	2951	2903	3015	2901
631	2723	2951	3015	3015
632	2909	2723	3015	3015
633	968	3015	2901	2901
634	2909	3015	968	968
635	3306	4108	4105	3309
636	4640	4641	4642	4643
637	4108	3308	3309	4111
638	4641	4644	4643	4645
639	3308	4113	4111	3312
640	4644	4646	4645	4647
641	4113	3311	3312	4115
642	4646	4648	4647	4649
643	3311	4117	4115	3315
644	4648	4650	4649	4651
645	4117	3314	3315	4119
646	4650	4652	4651	4653
647	3314	4121	4119	3318
648	4652	4654	4653	4655
649	4121	3317	3318	4123
650	4654	4656	4655	4657
651	3317	4125	4123	3321

Table 5: Connectivity - Solid, Part 1 of 2

Solid	Joint1	Joint2	Joint3	Joint4
652	4656	4658	4657	4659
653	4125	3320	3321	4127
654	4658	4660	4659	4661
655	3320	4129	4127	3324
656	4660	4662	4661	4663
657	4129	3323	3324	4131
658	4662	4664	4663	4665
659	3323	4133	4131	3327
660	4664	4666	4665	4667
661	4133	3326	3327	4106
662	4666	4668	4667	4669
663	4136	3310	3306	4108
664	4670	4671	4640	4641
665	3310	4139	4108	3308
666	4671	4672	4641	4644
667	4139	3313	3308	4113
668	4672	4673	4644	4646
669	3313	4142	4113	3311
670	4673	4674	4646	4648
671	4142	3316	3311	4117
672	4674	4675	4648	4650
673	3316	4145	4117	3314
674	4675	4676	4650	4652
675	4145	3319	3314	4121
676	4676	4677	4652	4654
677	3319	4148	4121	3317
678	4677	4678	4654	4656
679	4148	3322	3317	4125
680	4678	4679	4656	4658
681	3322	4151	4125	3320
682	4679	4680	4658	4660
683	4151	3325	3320	4129
684	4680	4681	4660	4662
685	3325	4154	4129	3323
686	4681	4682	4662	4664
687	4154	3328	3323	4133
688	4682	4683	4664	4666
689	3328	4157	4133	3326

Table 5: Connectivity - Solid, Part 1 of 2

Solid	Joint1	Joint2	Joint3	Joint4
690	4683	4684	4666	4668
691	3361	4159	4136	3310
692	4685	4686	4670	4671
693	4159	3360	3310	4139
694	4686	4687	4671	4672
695	3360	4160	4139	3313
696	4687	4688	4672	4673
697	4160	3358	3313	4142
698	4688	4689	4673	4674
699	3358	4161	4142	3316
700	4689	4690	4674	4675
701	4161	3338	3316	4145
702	4690	4691	4675	4676
703	3338	4162	4145	3319
704	4691	4692	4676	4677
705	4162	3339	3319	4148
706	4692	4693	4677	4678
707	3339	4163	4148	3322
708	4693	4694	4678	4679
709	4163	3340	3322	4151
710	4694	4695	4679	4680
711	3340	4164	4151	3325
712	4695	4696	4680	4681
713	4164	3341	3325	4154
714	4696	4697	4681	4682
715	3341	4165	4154	3328
716	4697	4698	4682	4683
717	4165	3342	3328	4157
718	4698	4699	4683	4684
719	4103	1577	3361	4159
720	4700	4701	4685	4686
721	1577	4168	4159	3360
722	4701	4702	4686	4687
723	4168	3359	3360	4160
724	4702	4703	4687	4688
725	3359	4171	4160	3358
726	4703	4704	4688	4689
727	4171	3357	3358	4161

Table 5: Connectivity - Solid, Part 1 of 2

Solid	Joint1	Joint2	Joint3	Joint4
728	4704	4705	4689	4690
729	3357	4174	4161	3338
730	4705	4706	4690	4691
731	4174	3356	3338	4162
732	4706	4707	4691	4692
733	3356	4177	4162	3339
734	4707	4708	4692	4693
735	4177	3355	3339	4163
736	4708	4709	4693	4694
737	3355	4180	4163	3340
738	4709	4710	4694	4695
739	4180	3354	3340	4164
740	4710	4711	4695	4696
741	3354	1561	4164	3341
742	4711	4712	4696	4697
743	1561	3353	3341	4165
744	4712	4713	4697	4698
745	3353	4104	4165	3342
746	4713	4714	4698	4699
747	3379	4186	4103	1577
748	4715	4716	4700	4701
749	4186	3371	1577	4168
750	4716	4717	4701	4702
751	3371	4100	4168	3359
752	4717	4718	4702	4703
753	4100	3372	3359	4171
754	4718	4719	4703	4704
755	3372	4187	4171	3357
756	4719	4720	4704	4705
757	4187	3373	3357	4174
758	4720	4721	4705	4706
759	3373	4101	4174	3356
760	4721	4722	4706	4707
761	4101	3374	3356	4177
762	4722	4723	4707	4708
763	3374	4188	4177	3355
764	4723	4724	4708	4709
765	4188	3375	3355	4180

Table 5: Connectivity - Solid, Part 1 of 2

Solid	Joint1	Joint2	Joint3	Joint4
766	4724	4725	4709	4710
767	3375	4102	4180	3354
768	4725	4726	4710	4711
769	4102	3376	3354	1561
770	4726	4727	4711	4712
771	3376	4189	1561	3353
772	4727	4728	4712	4713
773	4189	3380	3353	4104
774	4728	4729	4713	4714
775	3225	4190	4191	3217
776	4730	4731	4732	4733
777	4194	3227	3225	4190
778	4734	4735	4730	4731
779	3228	4196	4194	3227
780	4736	4737	4734	4735
781	4198	3229	3228	4196
782	4738	4739	4736	4737
783	3230	4200	4198	3229
784	4740	4741	4738	4739
785	4202	3225	3218	4191
786	4742	4730	4743	4732
787	3226	4194	4202	3225
788	4744	4734	4742	4730
789	3224	4202	4206	3218
790	4745	4742	4746	4743
791	4207	3226	3224	4202
792	4747	4744	4745	4742
793	4208	3228	3226	4194
794	4748	4736	4744	4734
795	3232	4208	4207	3226
796	4749	4748	4747	4744
797	4210	3224	3222	4206
798	4750	4745	4751	4746
799	3233	4207	4210	3224
800	4752	4747	4750	4745
801	3234	4210	4214	3222
802	4753	4750	4754	4751
803	4215	3233	3234	4210

Table 5: Connectivity - Solid, Part 1 of 2

Solid	Joint1	Joint2	Joint3	Joint4
804	4755	4752	4753	4750
805	4216	3232	3233	4207
806	4756	4749	4752	4747
807	3236	4216	4215	3233
808	4757	4756	4755	4752
809	3231	4198	4208	3228
810	4758	4738	4748	4736
811	4219	3231	3232	4208
812	4759	4758	4749	4748
813	3235	4219	4216	3232
814	4760	4759	4756	4749
815	4221	3235	3236	4216
816	4761	4760	4757	4756
817	4222	3230	3231	4198
818	4762	4740	4758	4738
819	3237	4222	4219	3231
820	4763	4762	4759	4758
821	4224	3237	3235	4219
822	4764	4763	4760	4759
823	3241	4224	4221	3235
824	4765	4764	4761	4760
825	4226	3246	3230	4200
826	4766	4767	4740	4741
827	3238	4226	4222	3230
828	4768	4766	4762	4740
829	4229	3238	3237	4222
830	4769	4768	4763	4762
831	3240	4229	4224	3237
832	4770	4769	4764	4763
833	4231	3240	3241	4224
834	4771	4770	4765	4764
835	3244	4232	4226	3246
836	4772	4773	4766	4767
837	4234	3244	3238	4226
838	4774	4772	4768	4766
839	3239	4234	4229	3238
840	4775	4774	4769	4768
841	4236	3239	3240	4229

Table 5: Connectivity - Solid, Part 1 of 2

Solid	Joint1	Joint2	Joint3	Joint4
842	4776	4775	4770	4769
843	3243	4236	4231	3240
844	4777	4776	4771	4770
845	3248	3247	3244	4232
846	4778	4779	4772	4773
847	3245	3248	4234	3244
848	4780	4778	4774	4772
849	3249	3245	3239	4234
850	4781	4780	4775	4774
851	3242	3249	4236	3239
852	4782	4781	4776	4775
853	3250	3242	3243	4236
854	4783	4782	4777	4776
855	4241	4242	3248	3247
856	4784	4785	4778	4779
857	4244	4241	3245	3248
858	4786	4784	4780	4778
859	4246	4244	3249	3245
860	4787	4786	4781	4780
861	4247	4246	3242	3249
862	4788	4787	4782	4781
863	4249	4247	3250	3242
864	4789	4788	4783	4782
865	4250	4251	4249	4247
866	4790	4791	4789	4788
867	4251	4253	4247	4246
868	4791	4792	4788	4787
869	4253	4255	4246	4244
870	4792	4793	4787	4786
871	4255	4256	4244	4241
872	4793	4794	4786	4784
873	4256	4258	4241	4242
874	4794	4795	4784	4785
875	3480	4259	4260	4261
876	4796	4797	4798	4799
877	4259	4264	4261	4265
878	4797	4800	4799	4801
879	4264	3505	4265	3509

Table 5: Connectivity - Solid, Part 1 of 2

Solid	Joint1	Joint2	Joint3	Joint4
880	4800	4802	4801	4803
881	3505	3504	3509	4268
882	4802	4804	4803	4805
883	3504	4270	4268	4271
884	4804	4806	4805	4807
885	4270	4273	4271	4274
886	4806	4808	4807	4809
887	4273	3506	4274	3508
888	4808	4810	4809	4811
889	3506	4277	3508	4278
890	4810	4812	4811	4813
891	4277	4280	4278	4281
892	4812	4814	4813	4815
893	4280	3499	4281	4283
894	4814	4816	4815	4817
895	3499	3498	4283	3500
896	4816	4818	4817	4819
897	3498	4286	3500	4287
898	4818	4820	4819	4821
899	4286	4289	4287	4290
900	4820	4822	4821	4823
901	4289	3497	4290	4292
902	4822	4824	4823	4825
903	3479	4294	3480	4259
904	4826	4827	4796	4797
905	4294	4297	4259	4264
906	4827	4828	4797	4800
907	4297	3456	4264	3505
908	4828	4829	4800	4802
909	3456	3459	3505	3504
910	4829	4830	4802	4804
911	3459	4301	3504	4270
912	4830	4831	4804	4806
913	4301	4303	4270	4273
914	4831	4832	4806	4808
915	4303	3507	4273	3506
916	4832	4833	4808	4810
917	3507	4306	3506	4277

Table 5: Connectivity - Solid, Part 1 of 2

Solid	Joint1	Joint2	Joint3	Joint4
918	4833	4834	4810	4812
919	4306	4308	4277	4280
920	4834	4835	4812	4814
921	4308	3460	4280	3499
922	4835	4836	4814	4816
923	3460	3463	3499	3498
924	4836	4837	4816	4818
925	3463	4312	3498	4286
926	4837	4838	4818	4820
927	4312	4314	4286	4289
928	4838	4839	4820	4822
929	4314	3464	4289	3497
930	4839	4840	4822	4824
931	4317	4318	3479	4294
932	4841	4842	4826	4827
933	4318	4319	4294	4297
934	4842	4843	4827	4828
935	4319	3086	4297	3456
936	4843	4844	4828	4829
937	3086	4320	3456	3459
938	4844	4845	4829	4830
939	4320	4321	3459	4301
940	4845	4846	4830	4831
941	4321	4322	4301	4303
942	4846	4847	4831	4832
943	4322	3088	4303	3507
944	4847	4848	4832	4833
945	3088	4323	3507	4306
946	4848	4849	4833	4834
947	4323	4324	4306	4308
948	4849	4850	4834	4835
949	4324	4325	4308	3460
950	4850	4851	4835	4836
951	4325	3092	3460	3463
952	4851	4852	4836	4837
953	3092	4326	3463	4312
954	4852	4853	4837	4838
955	4326	4327	4312	4314

Table 5: Connectivity - Solid, Part 1 of 2

Solid	Joint1	Joint2	Joint3	Joint4
956	4853	4854	4838	4839
957	4327	4328	4314	3464
958	4854	4855	4839	4840
959	4329	4330	4317	4318
960	4856	4857	4841	4842
961	4330	4333	4318	4319
962	4857	4858	4842	4843
963	4333	3081	4319	3086
964	4858	4859	4843	4844
965	3081	4336	3086	4320
966	4859	4860	4844	4845
967	4336	4338	4320	4321
968	4860	4861	4845	4846
969	4338	4340	4321	4322
970	4861	4862	4846	4847
971	4340	3089	4322	3088
972	4862	4863	4847	4848
973	3089	4343	3088	4323
974	4863	4864	4848	4849
975	4343	4345	4323	4324
976	4864	4865	4849	4850
977	4345	4347	4324	4325
978	4865	4866	4850	4851
979	4347	3093	4325	3092
980	4866	4867	4851	4852
981	3093	4350	3092	4326
982	4867	4868	4852	4853
983	4350	4352	4326	4327
984	4868	4869	4853	4854
985	4352	4354	4327	4328
986	4869	4870	4854	4855
987	4356	4357	4329	4330
988	4871	4872	4856	4857
989	4357	4358	4330	4333
990	4872	4873	4857	4858
991	4358	3076	4333	3081
992	4873	4874	4858	4859
993	3076	4359	3081	4336

Table 5: Connectivity - Solid, Part 1 of 2

Solid	Joint1	Joint2	Joint3	Joint4
994	4874	4875	4859	4860
995	4359	4360	4336	4338
996	4875	4876	4860	4861
997	4360	4361	4338	4340
998	4876	4877	4861	4862
999	4361	3077	4340	3089
1000	4877	4878	4862	4863
1001	3077	4362	3089	4343
1002	4878	4879	4863	4864
1003	4362	4363	4343	4345
1004	4879	4880	4864	4865
1005	4363	4364	4345	4347
1006	4880	4881	4865	4866
1007	4364	3078	4347	3093
1008	4881	4882	4866	4867
1009	3078	4365	3093	4350
1010	4882	4883	4867	4868
1011	4365	4366	4350	4352
1012	4883	4884	4868	4869
1013	4366	4367	4352	4354
1014	4884	4885	4869	4870
1015	4368	3151	3140	4369
1016	4886	4887	4888	4889
1017	3150	4372	4368	3151
1018	4890	4891	4886	4887
1019	4374	3152	3150	4372
1020	4892	4893	4890	4891
1021	3153	4376	4374	3152
1022	4894	4895	4892	4893
1023	4378	3158	3153	4376
1024	4896	4897	4894	4895
1025	3143	4368	4380	3140
1026	4898	4886	4899	4888
1027	4383	3150	3143	4368
1028	4900	4890	4898	4886
1029	4385	3143	3141	4380
1030	4901	4898	4902	4899
1031	3144	4383	4385	3143

Table 5: Connectivity - Solid, Part 1 of 2

Solid	Joint1	Joint2	Joint3	Joint4
1032	4903	4900	4901	4898
1033	3148	4374	4383	3150
1034	4904	4892	4900	4890
1035	4387	3148	3144	4383
1036	4905	4904	4903	4900
1037	3142	4385	4388	3141
1038	4906	4901	4907	4902
1039	4391	3144	3142	4385
1040	4908	4903	4906	4901
1041	4393	3142	3145	4388
1042	4909	4906	4910	4907
1043	3147	4391	4393	3142
1044	4911	4908	4909	4906
1045	3146	4387	4391	3144
1046	4912	4905	4908	4903
1047	4395	3146	3147	4391
1048	4913	4912	4911	4908
1049	4396	3153	3148	4374
1050	4914	4894	4904	4892
1051	3149	4396	4387	3148
1052	4915	4914	4905	4904
1053	4398	3149	3146	4387
1054	4916	4915	4912	4905
1055	3156	4398	4395	3146
1056	4917	4916	4913	4912
1057	3154	4378	4396	3153
1058	4918	4896	4914	4894
1059	4401	3154	3149	4396
1060	4919	4918	4915	4914
1061	3155	4401	4398	3149
1062	4920	4919	4916	4915
1063	4403	3155	3156	4398
1064	4921	4920	4917	4916
1065	3159	4404	4378	3158
1066	4922	4923	4896	4897
1067	4406	3159	3154	4378
1068	4924	4922	4918	4896
1069	3157	4406	4401	3154

Table 5: Connectivity - Solid, Part 1 of 2

Solid	Joint1	Joint2	Joint3	Joint4
1070	4925	4924	4919	4918
1071	4408	3157	3155	4401
1072	4926	4925	4920	4919
1073	3163	4408	4403	3155
1074	4927	4926	4921	4920
1075	4410	3164	3159	4404
1076	4928	4929	4922	4923
1077	3160	4410	4406	3159
1078	4930	4928	4924	4922
1079	4413	3160	3157	4406
1080	4931	4930	4925	4924
1081	3162	4413	4408	3157
1082	4932	4931	4926	4925
1083	4415	3162	3163	4408
1084	4933	4932	4927	4926
1085	3165	3430	4410	3164
1086	4934	4935	4928	4929
1087	3425	3165	3160	4410
1088	4936	4934	4930	4928
1089	3161	3425	4413	3160
1090	4937	4936	4931	4930
1091	3420	3161	3162	4413
1092	4938	4937	4932	4931
1093	3416	3420	4415	3162
1094	4939	4938	4933	4932
1095	4419	4420	3165	3430
1096	4940	4941	4934	4935
1097	4422	4419	3425	3165
1098	4942	4940	4936	4934
1099	4424	4422	3161	3425
1100	4943	4942	4937	4936
1101	4425	4424	3420	3161
1102	4944	4943	4938	4937
1103	4427	4425	3416	3420
1104	4945	4944	4939	4938
1105	4428	4429	4427	4425
1106	4946	4947	4945	4944
1107	4429	4431	4425	4424

Table 5: Connectivity - Solid, Part 1 of 2

Solid	Joint1	Joint2	Joint3	Joint4
1108	4947	4948	4944	4943
1109	4431	4433	4424	4422
1110	4948	4949	4943	4942
1111	4433	4434	4422	4419
1112	4949	4950	4942	4940
1113	4434	4591	4419	4420
1114	4950	4951	4940	4941
1115	3255	3258	4250	4251
1116	4952	4953	4790	4791
1117	3258	3259	4251	4253
1118	4953	4954	4791	4792
1119	3259	3260	4253	4255
1120	4954	4955	4792	4793
1121	3260	3261	4255	4256
1122	4955	4956	4793	4794
1123	3261	3257	4256	4258
1124	4956	4957	4794	4795
1125	3273	3263	3255	3258
1126	4958	4959	4952	4953
1127	3263	3266	3258	3259
1128	4959	4960	4953	4954
1129	3266	3268	3259	3260
1130	4960	4961	4954	4955
1131	3268	3270	3260	3261
1132	4961	4962	4955	4956
1133	3270	3272	3261	3257
1134	4962	4963	4956	4957
1135	4443	3306	3298	4105
1136	4964	4640	4965	4642
1137	3307	4136	4443	3306
1138	4966	4670	4964	4640
1139	4446	3361	3307	4136
1140	4967	4685	4966	4670
1141	3363	4103	4446	3361
1142	4968	4700	4967	4685
1143	4448	3379	3363	4103
1144	4969	4715	4968	4700
1145	3297	4443	4449	3298

Table 5: Connectivity - Solid, Part 1 of 2

Solid	Joint1	Joint2	Joint3	Joint4
1146	4970	4964	4971	4965
1147	4452	3307	3297	4443
1148	4972	4966	4970	4964
1149	3365	4446	4452	3307
1150	4973	4967	4972	4966
1151	4455	3363	3365	4446
1152	4974	4968	4973	4967
1153	3378	4448	4455	3363
1154	4975	4969	4974	4968
1155	3272	3270	3281	3280
1156	4963	4962	4976	4977
1157	3270	3268	3280	3279
1158	4962	4961	4977	4978
1159	3274	3272	3282	3281
1160	4979	4963	4980	4976
1161	3268	3266	3279	3277
1162	4961	4960	4978	4981
1163	3257	3272	3274	3274
1164	4957	4963	4979	4979
1165	3279	3277	3284	3286
1166	4978	4981	4982	4983
1167	3280	3279	3287	3284
1168	4977	4978	4984	4982
1169	3281	3280	3289	3287
1170	4976	4977	4985	4984
1171	3282	3281	3291	3289
1172	4980	4976	4986	4985
1173	3283	3282	3293	3291
1174	4987	4980	4988	4986
1175	3284	3286	3288	3285
1176	4982	4983	4989	4990
1177	3287	3284	3290	3288
1178	4984	4982	4991	4989
1179	3289	3287	3292	3290
1180	4985	4984	4992	4991
1181	3291	3289	3294	3292
1182	4986	4985	4993	4992
1183	3293	3291	3297	3294

Table 5: Connectivity - Solid, Part 1 of 2

Solid	Joint1	Joint2	Joint3	Joint4
1184	4988	4986	4970	4993
1185	3294	3292	3304	3303
1186	4993	4992	4994	4995
1187	3304	3303	3365	3366
1188	4994	4995	4973	4996
1189	3292	3290	3303	3302
1190	4992	4991	4995	4997
1191	3303	3302	3366	3367
1192	4995	4997	4996	4998
1193	3366	3367	3369	3368
1194	4996	4998	4999	5000
1195	3365	3366	4455	3369
1196	4973	4996	4974	4999
1197	4452	3304	3365	3365
1198	4972	4994	4973	4973
1199	3297	3294	4452	3304
1200	4970	4993	4972	4994
1201	4449	3293	3297	3297
1202	4971	4988	4970	4970
1203	3276	3274	3283	3282
1204	5001	4979	4987	4980
1205	3296	3283	4449	3293
1206	5002	4987	4971	4988
1207	3276	3257	3274	3274
1208	5001	4957	4979	4979
1209	3263	3273	3277	3278
1210	4959	4958	4981	5003
1211	3266	3263	3277	3277
1212	4960	4959	4981	4981
1213	3288	3285	3302	3301
1214	4989	4990	4997	5004
1215	3290	3288	3302	3302
1216	4991	4989	4997	4997
1217	4476	3378	3369	4455
1218	5005	4975	4999	4974
1219	4476	3369	3368	3368
1220	5005	4999	5000	5000
1221	3302	3301	3368	3368

Table 5: Connectivity - Solid, Part 1 of 2

Solid	Joint1	Joint2	Joint3	Joint4
1222	4997	5004	5000	5000
1223	3277	3278	3286	4477
1224	4981	5003	4983	5006
1225	3286	4477	3285	3285
1226	4983	5006	4990	4990
1227	3296	3276	3283	3283
1228	5007	5001	4987	4987
1229	3295	4478	4449	3296
1230	5008	5009	4971	5007
1231	3298	4478	3295	3295
1232	4965	5009	5008	5008
1233	3481	3480	3510	4260
1234	5010	4796	5011	4798
1235	3174	4317	3454	3479
1236	5012	5013	5014	5015
1237	3084	4329	3174	4317
1238	5016	4856	5012	5013
1239	4329	3084	4356	4484
1240	4856	5016	4871	5017
1241	3084	3176	3080	3184
1242	5016	5018	5019	5020
1243	3174	3175	3084	3176
1244	5012	5021	5016	5018
1245	3454	3436	3174	3175
1246	5014	5022	5012	5021
1247	3510	3502	3481	3476
1248	5011	5023	5010	5024
1249	3176	3182	3184	3185
1250	5018	5025	5020	5026
1251	3175	3177	3176	3182
1252	5021	5027	5018	5025
1253	3436	3178	3175	3177
1254	5022	5028	5021	5027
1255	3476	3451	3436	3178
1256	5024	5029	5022	5028
1257	3502	3503	3476	3451
1258	5023	5030	5024	5029
1259	3510	4494	3502	3502

Table 5: Connectivity - Solid, Part 1 of 2

Solid	Joint1	Joint2	Joint3	Joint4
1260	5011	5031	5023	5023
1261	3178	3179	3177	3183
1262	5028	5032	5027	5033
1263	3177	3183	3182	3186
1264	5027	5033	5025	5034
1265	3182	3186	3185	3187
1266	5025	5034	5026	5035
1267	3451	3180	3178	3179
1268	5029	5036	5028	5032
1269	3503	3441	3451	3180
1270	5030	5037	5029	5036
1271	3441	3440	3180	3181
1272	5037	5038	5036	5039
1273	3180	3181	3179	3193
1274	5036	5039	5032	5040
1275	3179	3193	3183	3189
1276	5032	5040	5033	5041
1277	3183	3189	3186	3188
1278	5033	5041	5034	5042
1279	3186	3188	3187	3200
1280	5034	5042	5035	5043
1281	3181	3194	3193	3191
1282	5039	5044	5040	5045
1283	3193	3191	3189	3190
1284	5040	5045	5041	5046
1285	3189	3190	3188	3199
1286	5041	5046	5042	5047
1287	3188	3199	3200	3204
1288	5042	5047	5043	5048
1289	3191	3192	3190	3197
1290	5045	5049	5046	5050
1291	3190	3197	3199	3205
1292	5046	5050	5047	5051
1293	3199	3205	3204	3211
1294	5047	5051	5048	5052
1295	3192	3198	3197	3206
1296	5049	5053	5050	5054
1297	3197	3206	3205	3210

Table 5: Connectivity - Solid, Part 1 of 2

Solid	Joint1	Joint2	Joint3	Joint4
1298	5050	5054	5051	5055
1299	3205	3210	3211	3214
1300	5051	5055	5052	5056
1301	3204	3211	3212	3213
1302	5048	5052	5057	5058
1303	3200	3204	3203	3212
1304	5043	5048	5059	5057
1305	3187	3200	3202	3203
1306	5035	5043	5060	5059
1307	3194	3195	3191	3192
1308	5044	5061	5045	5049
1309	3198	3207	3206	3208
1310	5053	5062	5054	5063
1311	3206	3208	3210	3215
1312	5054	5063	5055	5064
1313	3210	3215	3214	3219
1314	5055	5064	5056	5065
1315	3207	3209	3208	3216
1316	5062	5066	5063	5067
1317	3208	3216	3215	3220
1318	5063	5067	5064	5068
1319	3211	3214	3213	3218
1320	5052	5056	5058	5069
1321	3214	3219	3218	4524
1322	5056	5065	5069	5070
1323	3215	3220	3219	3222
1324	5064	5068	5065	4751
1325	3220	3223	3222	4525
1326	5068	5071	4751	5072
1327	3219	3222	4524	4524
1328	5065	4751	5070	5070
1329	3213	3218	4527	4527
1330	5058	5069	5073	5073
1331	4494	4099	3502	3503
1332	5031	5074	5023	5030
1333	3212	3213	4528	4528
1334	5057	5058	5075	5075
1335	4528	3213	3217	4527

Table 5: Connectivity - Solid, Part 1 of 2

Solid	Joint1	Joint2	Joint3	Joint4
1336	5075	5058	5076	5073
1337	3209	4529	3216	3216
1338	5066	5077	5067	5067
1339	3220	3216	3223	3221
1340	5068	5067	5071	5078
1341	3216	4529	3221	3221
1342	5067	5077	5078	5078
1343	4484	3084	3080	3080
1344	5017	5016	5019	5019
1345	3185	3187	3055	3202
1346	5026	5035	5079	5060
1347	3195	3196	3192	3198
1348	5061	5080	5049	5053
1349	3196	4531	3198	3207
1350	5080	5081	5053	5062
1351	4099	4532	3503	3441
1352	5074	5082	5030	5037
1353	4532	3440	3441	3441
1354	5082	5038	5037	5037
1355	3440	4533	3181	3194
1356	5038	5083	5039	5044
1357	4533	4534	3194	3195
1358	5083	5084	5044	5061
1359	4534	3196	3195	3195
1360	5084	5080	5061	5061
1361	4531	3209	3207	3207
1362	5081	5066	5062	5062
1363	4484	3080	4535	3184
1364	5017	5019	5085	5020
1365	3184	3185	4535	3055
1366	5020	5026	5085	5079
1367	3202	3203	4536	4536
1368	5060	5059	5086	5086
1369	3203	3212	4536	4528
1370	5059	5057	5086	5075
1371	3480	3455	3479	3454
1372	4796	5087	5015	5014
1373	3455	3476	3454	3436

Table 5: Connectivity - Solid, Part 1 of 2

Solid	Joint1	Joint2	Joint3	Joint4
1374	5087	5024	5014	5022
1375	3128	3129	4369	3140
1376	5088	5089	4889	4888
1377	4540	3126	3128	3129
1378	5090	5091	5088	5089
1379	3126	3127	3129	3138
1380	5091	5092	5089	5093
1381	3138	3141	4380	4380
1382	5093	5094	4899	4899
1383	3127	3134	3138	3141
1384	5092	5095	5093	5094
1385	3134	3137	3141	4388
1386	5095	5096	5094	4907
1387	3125	3133	3134	3137
1388	5097	5098	5095	5096
1389	3123	3125	3127	3134
1390	5099	5097	5092	5095
1391	3122	3123	3126	3127
1392	5100	5099	5091	5092
1393	4549	3122	4540	3126
1394	5101	5100	5090	5091
1395	3120	3121	3123	3125
1396	5102	5103	5099	5097
1397	3121	3124	3125	3133
1398	5103	5104	5097	5098
1399	3124	3132	3133	3136
1400	5104	5105	5098	5106
1401	3133	3136	3137	3145
1402	5098	5106	5096	4910
1403	3117	3118	3124	3132
1404	5107	5108	5104	5105
1405	3119	3117	3121	3124
1406	5109	5107	5103	5104
1407	3110	3114	3117	3118
1408	5110	5111	5107	5108
1409	3106	3108	3114	3115
1410	5112	5113	5111	5114
1411	3114	3115	3118	3130

Table 5: Connectivity - Solid, Part 1 of 2

Solid	Joint1	Joint2	Joint3	Joint4
1412	5111	5114	5108	5115
1413	3115	3116	3130	3130
1414	5114	5116	5115	5115
1415	3108	3112	3115	3116
1416	5113	5117	5114	5116
1417	3101	3103	3108	3112
1418	5118	5119	5113	5117
1419	3103	3107	3112	3113
1420	5119	5120	5117	5121
1421	3102	3099	3103	3107
1422	5122	5123	5119	5120
1423	3167	3102	3101	3103
1424	5124	5122	5118	5119
1425	3119	3110	3117	3117
1426	5109	5110	5107	5107
1427	3122	3120	3123	3123
1428	5100	5102	5099	5099
1429	3120	3119	3121	3121
1430	5102	5109	5103	5103
1431	3122	4569	3120	3120
1432	5100	5125	5102	5102
1433	3106	3101	3108	3108
1434	5112	5118	5113	5113
1435	3105	3167	3106	3101
1436	5126	5124	5112	5118
1437	3113	3107	3111	3100
1438	5121	5120	5127	5128
1439	3107	3099	3100	3094
1440	5120	5123	5128	5129
1441	3099	3166	3094	3168
1442	5123	5130	5129	5131
1443	3102	3169	3166	3471
1444	5122	5132	5130	5133
1445	3166	3471	3168	3469
1446	5130	5133	5131	5134
1447	3471	3474	3469	3492
1448	5133	5135	5134	5136
1449	3111	3100	3079	3096

Table 5: Connectivity - Solid, Part 1 of 2

Solid	Joint1	Joint2	Joint3	Joint4
1450	5127	5128	5137	5138
1451	3469	3492	3495	3493
1452	5134	5136	5139	5140
1453	3493	3494	3495	4292
1454	5140	5141	5139	4825
1455	3495	4292	3497	3497
1456	5139	4825	4824	4824
1457	3167	3169	3102	3102
1458	5124	5132	5122	5122
1459	3102	3166	3099	3099
1460	5122	5130	5123	5123
1461	3096	4354	3079	4367
1462	5138	4870	5137	4885
1463	3469	3495	3466	3466
1464	5134	5139	5142	5142
1465	3475	3492	3474	3474
1466	5143	5136	5135	5135
1467	3466	3495	3467	3467
1468	5142	5139	5144	5144
1469	3168	3447	3094	3095
1470	5131	5145	5129	5146
1471	3094	3095	3100	3096
1472	5129	5146	5128	5138
1473	3469	3466	3447	3467
1474	5134	5142	5145	5144
1475	3467	4328	3447	3095
1476	5144	5147	5145	5146
1477	3095	4328	3096	4354
1478	5146	5147	5138	4870
1479	3467	3464	4328	4328
1480	5144	5148	5147	5147
1481	3495	3464	3467	3467
1482	5139	5148	5144	5144
1483	3495	3497	3464	3464
1484	5139	4824	5148	5148
1485	3137	3145	4388	4388
1486	5096	4910	4907	4907
1487	3129	3138	3140	4380

Table 5: Connectivity - Solid, Part 1 of 2

Solid	Joint1	Joint2	Joint3	Joint4
1488	5089	5093	4888	4899
1489	3119	3109	3110	3104
1490	5109	5149	5110	5150
1491	3120	4569	3119	3109
1492	5102	5125	5109	5149
1493	3110	3104	3106	3105
1494	5110	5150	5112	5126
1495	3110	3106	3114	3114
1496	5110	5112	5111	5111
1497	3105	3438	3167	3167
1498	5126	5151	5124	5124
1499	3104	4585	3105	3437
1500	5150	5152	5126	5153
1501	3105	3437	3438	3438
1502	5126	5153	5151	5151
1503	3136	3130	3145	3135
1504	5106	5115	4910	5154
1505	3132	3130	3136	3136
1506	5105	5115	5106	5106
1507	3132	3118	3130	3130
1508	5105	5108	5115	5115
1509	3145	3135	3131	3131
1510	4910	5154	5155	5155
1511	3135	3130	3131	3116
1512	5154	5115	5155	5116
1513	3112	3113	3116	3116
1514	5117	5121	5116	5116
1515	3438	3449	3167	3169
1516	5151	5156	5124	5132
1517	3449	3472	3169	3169
1518	5156	5157	5132	5132
1519	3472	3470	3169	3169
1520	5157	5158	5132	5132
1521	3470	3474	3169	3471
1522	5158	5135	5132	5133
1523	3109	4585	3104	3104
1524	5149	5152	5150	5150
1525	3469	3447	3168	3168

Table 5: Connectivity - Solid, Part 1 of 2

Solid	Joint1	Joint2	Joint3	Joint4
1526	5134	5145	5131	5131
1527	3480	3481	3455	3476
1528	4796	5010	5087	5024
1529	3475	3494	3492	3493
1530	5159	5141	5136	5140
1531	3438	4586	3449	3472
1532	5160	5161	5156	5157
1533	3472	4586	3474	3475
1534	5157	5161	5135	5143
1535	3131	3116	3113	3113
1536	5162	5116	5121	5121
1537	3417	3421	4428	4429
1538	5163	5164	4946	4947
1539	3421	3423	4429	4431
1540	5164	5165	4947	5166
1541	3423	3426	4431	4433
1542	5165	5167	5166	5168
1543	3426	3428	4433	4434
1544	5167	5169	5168	4950
1545	3428	3429	4434	4591
1546	5169	5170	4950	4951
1547	3329	3326	3331	4157
1548	5171	4668	5172	5173
1549	3331	4157	3343	3342
1550	5172	5173	5174	5175
1551	3343	3342	3352	4104
1552	5174	5175	5176	4714
1553	3352	4104	3377	3380
1554	5176	4714	5177	4729
1555	3333	3330	3332	3329
1556	5178	5179	5180	5171
1557	3332	3329	3334	3331
1558	5180	5171	5181	5172
1559	3334	3331	3344	3343
1560	5181	5172	5182	5174
1561	3344	3343	3350	3352
1562	5182	5174	5183	5176
1563	3350	3352	3351	3377

Table 5: Connectivity - Solid, Part 1 of 2

Solid	Joint1	Joint2	Joint3	Joint4
1564	5183	5176	5184	5177
1565	3390	3330	3333	3333
1566	5185	5179	5178	5178
1567	3336	3333	3335	3332
1568	5186	5178	5187	5180
1569	3335	3332	3337	3334
1570	5187	5180	5188	5181
1571	3337	3334	3345	3344
1572	5188	5181	5189	5182
1573	3345	3344	3346	3350
1574	5189	5182	5190	5183
1575	3391	3390	3336	3333
1576	5191	5185	5186	5178
1577	3381	3336	3382	3335
1578	5192	5186	5193	5187
1579	3409	3396	3397	3397
1580	5194	5195	5196	5196
1581	3397	3396	3392	3391
1582	5196	5195	5197	5191
1583	3392	3391	3381	3336
1584	5197	5191	5192	5186
1585	3384	3381	3385	3382
1586	5198	5192	5199	5193
1587	3393	3392	3384	3381
1588	5200	5197	5198	5192
1589	3398	3397	3393	3392
1590	5201	5196	5200	5197
1591	3410	3409	3398	3397
1592	5202	5194	5201	5196
1593	3421	3417	3410	3409
1594	5164	5163	5202	5194
1595	3423	3421	3411	3410
1596	5165	5164	5203	5202
1597	3426	3423	3412	3411
1598	5167	5165	5204	5203
1599	3428	3426	3413	3412
1600	5169	5167	5205	5204
1601	3404	3413	3405	3412

Table 5: Connectivity - Solid, Part 1 of 2

Solid	Joint1	Joint2	Joint3	Joint4
1602	5206	5205	5207	5204
1603	3405	3412	3402	3411
1604	5207	5204	5208	5203
1605	3402	3411	3400	3410
1606	5208	5203	5209	5202
1607	3400	3410	3398	3398
1608	5209	5202	5201	5201
1609	3400	3398	3395	3393
1610	5209	5201	5210	5200
1611	3402	3400	3399	3395
1612	5208	5209	5211	5210
1613	3405	3402	3401	3399
1614	5207	5208	5212	5211
1615	3399	3395	3394	3387
1616	5211	5210	5213	5214
1617	3395	3393	3387	3384
1618	5210	5200	5214	5198
1619	3387	3384	3386	3385
1620	5214	5198	5215	5199
1621	3382	3335	3348	3337
1622	5193	5187	5216	5188
1623	3385	3382	3383	3348
1624	5199	5193	5217	5216
1625	3348	3337	3347	3345
1626	5216	5188	5218	5189
1627	3386	3385	3388	3383
1628	5215	5199	5219	5217
1629	3347	3345	3346	3346
1630	5218	5189	5190	5190
1631	3394	3387	3386	3386
1632	5213	5214	5215	5215
1633	3383	3348	3347	3347
1634	5217	5216	5218	5218
1635	3404	3405	3401	3401
1636	5206	5207	5212	5212
1637	3407	3404	3406	3401
1638	5220	5206	5221	5212
1639	3428	3404	3429	3407

Table 5: Connectivity - Solid, Part 1 of 2

Solid	Joint1	Joint2	Joint3	Joint4
1640	5169	5206	5170	5220
1641	3428	3413	3404	3404
1642	5169	5205	5206	5206
1643	3401	3399	3403	3394
1644	5212	5211	5222	5213
1645	3401	3403	3406	4637
1646	5212	5222	5221	5223
1647	3403	3394	4638	3386
1648	5222	5213	5224	5215
1649	4637	3403	4638	4638
1650	5223	5222	5224	5224
1651	4638	3386	3388	3388
1652	5224	5215	5219	5219
1653	3388	3383	4639	4639
1654	5219	5217	5225	5225
1655	4639	3383	3347	3347
1656	5225	5217	5218	5218
1657	3396	3390	3391	3391
1658	5195	5185	5191	5191
1659	3330	4106	3329	3326
1660	5179	4669	5171	4668
1661	3346	3350	3351	3351
1662	5190	5183	5184	5184
1663	3347	3346	3351	3351
1664	3388	4639	3347	3347
1665	5227	5225	5226	5226

Table 5: Connectivity - Solid, Part 2 of 2

Table 5: Connectivity - Solid, Part 2 of 2

Solid	Joint5	Joint6	Joint7	Joint8
1	3017	3018	3019	3020
2	3018	3021	3020	3022
3	3021	3023	3022	3024
4	3023	3025	3024	3026
5	3025	3027	3026	3028
6	3029	3017	3030	3019

Table 5: Connectivity - Solid, Part 2 of 2

Solid	Joint5	Joint6	Joint7	Joint8
7	3031	3032	3029	3017
8	3032	3033	3017	3018
9	3033	3034	3018	3021
10	3034	3035	3021	3023
11	3035	3036	3023	3025
12	3036	3037	3025	3027
13	3037	3038	3027	3039
14	3027	3039	3028	3040
15	3041	3042	3037	3038
16	3043	3044	3031	3032
17	3044	3045	3032	3033
18	3045	3046	3033	3034
19	3046	3047	3034	3035
20	3047	3048	3035	3036
21	3048	3041	3036	3037
22	3019	3020	3049	3050
23	3020	3022	3050	3051
24	3022	3024	3051	3052
25	3024	3026	3052	3053
26	3026	3028	3053	3054
27	3030	3019	3055	3049
28	3056	3057	3043	3044
29	3057	3058	3044	3045
30	3058	3059	3045	3046
31	3059	3060	3046	3047
32	3060	3061	3047	3048
33	3061	3062	3048	3041
34	3062	3063	3041	3042
35	3064	3056	3065	3043
36	3065	3043	3066	3031
37	3066	3031	3067	3029
38	3067	3029	3068	3030
39	3069	3070	3057	3058
40	3070	3071	3058	3059
41	3071	3072	3059	3060
42	3072	3073	3060	3061
43	3073	3074	3061	3062
44	3075	3069	3056	3057

Table 5: Connectivity - Solid, Part 2 of 2

Solid	Joint5	Joint6	Joint7	Joint8
45	3050	3051	3076	3077
46	3051	3052	3077	3078
47	3052	3053	3078	3079
48	3049	3050	3080	3076
49	3081	3082	3083	3084
50	3085	3086	3081	3082
51	3087	3088	3089	3085
52	3089	3085	3090	3081
53	3091	3092	3093	3087
54	3094	3095	3096	3091
55	3087	3089	3093	3097
56	3089	3090	3097	3077
57	3097	3077	3078	3078
58	3090	3076	3077	3077
59	3081	3083	3090	3076
60	3083	3080	3076	3076
61	3093	3097	3098	3078
62	3091	3093	3096	3098
63	3099	3094	3100	3096
64	3101	3102	3103	3099
65	3104	3105	3106	3101
66	3103	3099	3107	3100
67	3106	3101	3108	3103
68	3109	3104	3110	3106
69	3100	3079	3107	3111
70	3096	3098	3100	3079
71	3098	3078	3079	3079
72	3103	3107	3108	3112
73	3112	3107	3113	3111
74	3110	3106	3114	3108
75	3114	3108	3115	3112
76	3115	3112	3116	3113
77	3117	3114	3118	3115
78	3119	3110	3117	3114
79	3120	3119	3121	3117
80	3122	3120	3123	3121
81	3121	3117	3124	3118
82	3123	3121	3125	3124

Table 5: Connectivity - Solid, Part 2 of 2

Solid	Joint5	Joint6	Joint7	Joint8
83	3126	3123	3127	3125
84	3128	3126	3129	3127
85	3118	3115	3130	3116
86	3116	3054	3130	3131
87	3124	3118	3132	3130
88	3125	3124	3133	3132
89	3127	3125	3134	3133
90	3132	3130	3135	3131
91	3133	3132	3136	3135
92	3134	3133	3137	3136
93	3129	3127	3138	3134
94	3139	3129	3140	3138
95	3138	3134	3141	3137
96	3141	3142	3143	3144
97	3140	3138	3143	3141
98	3137	3145	3141	3142
99	3144	3142	3146	3147
100	3148	3144	3149	3146
101	3150	3143	3148	3144
102	3151	3140	3150	3143
103	3152	3150	3153	3148
104	3153	3148	3154	3149
105	3149	3146	3155	3156
106	3154	3149	3157	3155
107	3158	3153	3159	3154
108	3159	3154	3160	3157
109	3160	3157	3161	3162
110	3157	3155	3162	3163
111	3164	3159	3165	3160
112	3102	3166	3099	3094
113	3167	3102	3105	3101
114	3166	3168	3094	3095
115	3167	3169	3102	3166
116	3095	3170	3091	3092
117	3092	3171	3087	3088
118	3088	3172	3085	3086
119	3086	3173	3082	3174
120	3082	3174	3084	3175

Table 5: Connectivity - Solid, Part 2 of 2

Solid	Joint5	Joint6	Joint7	Joint8
121	3083	3084	3080	3176
122	3084	3175	3176	3177
123	3175	3178	3177	3179
124	3178	3180	3179	3181
125	3176	3177	3182	3183
126	3080	3176	3184	3182
127	3185	3186	3187	3188
128	3184	3182	3185	3186
129	3182	3183	3186	3189
130	3186	3189	3188	3190
131	3189	3191	3190	3192
132	3183	3193	3189	3191
133	3177	3179	3183	3193
134	3179	3181	3193	3194
135	3193	3194	3191	3195
136	3191	3195	3192	3196
137	3190	3192	3197	3198
138	3188	3190	3199	3197
139	3187	3188	3200	3199
140	3201	3185	3055	3187
141	3055	3187	3202	3200
142	3202	3200	3203	3204
143	3200	3199	3204	3205
144	3199	3197	3205	3206
145	3197	3198	3206	3207
146	3206	3207	3208	3209
147	3205	3206	3210	3208
148	3204	3205	3211	3210
149	3203	3204	3212	3211
150	3212	3211	3213	3214
151	3211	3210	3214	3215
152	3210	3208	3215	3216
153	3068	3212	3217	3213
154	3213	3214	3218	3219
155	3214	3215	3219	3220
156	3215	3216	3220	3221
157	3219	3220	3222	3223
158	3218	3219	3224	3222

Table 5: Connectivity - Solid, Part 2 of 2

Solid	Joint5	Joint6	Joint7	Joint8
159	3217	3213	3225	3218
160	3225	3218	3226	3224
161	3227	3225	3228	3226
162	3229	3228	3230	3231
163	3228	3226	3231	3232
164	3226	3224	3232	3233
165	3224	3222	3233	3234
166	3232	3233	3235	3236
167	3231	3232	3237	3235
168	3230	3231	3238	3237
169	3238	3237	3239	3240
170	3237	3235	3240	3241
171	3239	3240	3242	3243
172	3244	3238	3245	3239
173	3246	3230	3244	3238
174	3247	3244	3248	3248
175	3248	3244	3245	3245
176	3245	3239	3249	3249
177	3249	3239	3242	3242
178	3242	3243	3250	3250
179	3217	3225	3227	3227
180	3229	3227	3228	3228
181	3229	3230	3246	3246
182	3246	3244	3247	3247
183	3249	3242	3251	3252
184	3253	3245	3251	3249
185	3254	3248	3253	3245
186	3252	3250	3255	3255
187	3247	3256	3257	3257
188	3242	3250	3252	3252
189	3247	3248	3256	3254
190	3251	3252	3258	3255
191	3259	3253	3258	3251
192	3260	3254	3259	3253
193	3261	3256	3260	3254
194	3257	3256	3261	3261
195	3262	3258	3263	3264
196	3265	3259	3266	3262

Table 5: Connectivity - Solid, Part 2 of 2

Solid	Joint5	Joint6	Joint7	Joint8
197	3267	3260	3268	3265
198	3269	3261	3270	3267
199	3271	3257	3272	3269
200	3264	3255	3273	3273
201	3258	3255	3264	3264
202	3259	3258	3262	3262
203	3260	3259	3265	3265
204	3261	3260	3267	3267
205	3257	3261	3269	3269
206	3271	3272	3274	3274
207	3275	3271	3274	3274
208	3276	3275	3274	3274
209	3075	3275	3276	3276
210	3268	3266	3277	3278
211	3270	3268	3279	3277
212	3272	3270	3280	3279
213	3274	3272	3281	3280
214	3276	3274	3282	3281
215	3075	3276	3283	3282
216	3266	3263	3278	3278
217	3263	3264	3273	3273
218	3266	3262	3263	3263
219	3268	3265	3266	3266
220	3270	3267	3268	3268
221	3272	3269	3270	3270
222	3284	3279	3285	3286
223	3287	3280	3288	3284
224	3289	3281	3290	3287
225	3291	3282	3292	3289
226	3293	3283	3294	3291
227	3295	3296	3297	3293
228	3298	3299	3300	3295
229	3279	3277	3286	3286
230	3280	3279	3284	3284
231	3281	3280	3287	3287
232	3282	3281	3289	3289
233	3283	3282	3291	3291
234	3296	3075	3293	3283

Table 5: Connectivity - Solid, Part 2 of 2

Solid	Joint5	Joint6	Joint7	Joint8
235	3290	3287	3301	3288
236	3292	3289	3302	3290
237	3294	3291	3303	3292
238	3297	3293	3304	3294
239	3300	3295	3305	3297
240	3306	3298	3307	3300
241	3308	3309	3310	3306
242	3311	3312	3313	3308
243	3314	3315	3316	3311
244	3317	3318	3319	3314
245	3320	3321	3322	3317
246	3323	3324	3325	3320
247	3326	3327	3328	3323
248	3329	3330	3331	3326
249	3332	3333	3334	3329
250	3335	3336	3337	3332
251	3319	3314	3338	3316
252	3322	3317	3339	3319
253	3325	3320	3340	3322
254	3328	3323	3341	3325
255	3331	3326	3342	3328
256	3334	3329	3343	3331
257	3337	3332	3344	3334
258	3345	3337	3346	3344
259	3347	3348	3349	3345
260	3348	3335	3345	3337
261	3344	3334	3350	3343
262	3346	3344	3351	3350
263	3343	3331	3352	3342
264	3342	3328	3353	3341
265	3341	3325	3354	3340
266	3340	3322	3355	3339
267	3339	3319	3356	3338
268	3338	3316	3357	3358
269	3316	3311	3358	3313
270	3358	3313	3359	3360
271	3313	3308	3360	3310
272	3360	3310	1577	3361

Table 5: Connectivity - Solid, Part 2 of 2

Solid	Joint5	Joint6	Joint7	Joint8
273	3310	3306	3361	3307
274	3307	3300	3362	3305
275	3361	3307	3363	3362
276	3362	3305	3364	3365
277	3305	3297	3365	3304
278	3304	3294	3366	3303
279	3303	3292	3367	3302
280	3366	3303	3368	3367
281	3365	3304	3369	3366
282	3363	3362	3370	3364
283	3359	3360	3371	1577
284	3357	3358	3372	3359
285	3356	3338	3373	3357
286	3355	3339	3374	3356
287	3354	3340	3375	3355
288	3353	3341	3376	3354
289	3350	3343	3377	3352
290	3370	3364	3378	3378
291	3379	3363	3370	3370
292	3371	1577	3379	3379
293	3373	3357	3372	3372
294	3375	3355	3374	3374
295	3380	3353	3376	3376
296	3377	3352	3380	3380
297	3351	3350	3377	3377
298	3364	3365	3378	3369
299	3369	3366	3368	3368
300	3369	3368	3378	3378
301	3302	3290	3301	3301
302	3367	3302	3301	3301
303	3367	3301	3368	3368
304	3288	3284	3285	3285
305	3288	3285	3301	3301
306	3286	3277	3278	3278
307	3286	3278	3285	3285
308	3301	3285	3368	3368
309	3278	3263	3273	3273
310	3345	3346	3349	3349

Table 5: Connectivity - Solid, Part 2 of 2

Solid	Joint5	Joint6	Joint7	Joint8
311	3349	3346	3351	3351
312	3381	3335	3382	3348
313	3383	3382	3347	3348
314	3384	3382	3385	3383
315	3386	3387	3388	3385
316	3388	3385	3383	3383
317	3388	3383	3347	3347
318	3388	3347	3349	3349
319	3299	3296	3295	3295
320	3312	3309	3308	3308
321	3315	3312	3311	3311
322	3318	3315	3314	3314
323	3321	3318	3317	3317
324	3324	3321	3320	3320
325	3327	3324	3323	3323
326	3389	3330	3333	3329
327	3390	3333	3336	3332
328	3391	3336	3381	3335
329	3392	3381	3384	3382
330	3393	3384	3387	3385
331	3394	3395	3386	3387
332	3299	3075	3296	3296
333	3275	3257	3271	3271
334	3391	3074	3336	3390
335	3392	3396	3381	3391
336	3393	3397	3384	3392
337	3395	3398	3387	3393
338	3399	3400	3394	3395
339	3401	3402	3403	3399
340	3404	3405	3406	3401
341	3403	3399	3394	3394
342	3403	3394	3386	3386
343	3403	3386	3388	3388
344	3407	3404	3406	3406
345	3406	3401	3403	3403
346	3397	3408	3392	3396
347	3398	3409	3393	3397
348	3400	3410	3395	3398

Table 5: Connectivity - Solid, Part 2 of 2

Solid	Joint5	Joint6	Joint7	Joint8
349	3402	3411	3399	3400
350	3405	3412	3401	3402
351	3404	3413	3405	3405
352	3407	3414	3404	3404
353	3415	3416	3417	3418
354	3419	3420	3421	3415
355	3422	3161	3423	3419
356	3424	3425	3426	3422
357	3427	3165	3428	3424
358	3425	3160	3161	3161
359	3165	3160	3425	3425
360	3425	3161	3422	3422
361	3165	3425	3424	3424
362	3161	3162	3420	3420
363	3420	3416	3415	3415
364	3421	3415	3410	3417
365	3423	3419	3411	3421
366	3426	3422	3412	3423
367	3428	3424	3413	3426
368	3414	3428	3404	3413
369	3413	3426	3405	3412
370	3412	3423	3402	3411
371	3411	3421	3400	3410
372	3410	3417	3398	3409
373	3409	3063	3397	3408
374	3417	3418	3409	3063
375	3396	3074	3391	3391
376	3074	3389	3390	3390
377	3390	3389	3333	3333
378	3408	3074	3396	3396
379	3063	3074	3408	3408
380	3406	3403	3388	3388
381	3161	3420	3419	3419
382	3429	3427	3414	3428
383	3429	3414	3407	3407
384	3164	3165	3430	3430
385	3430	3165	3427	3427
386	3430	3427	3429	3429

Table 5: Connectivity - Solid, Part 2 of 2

Solid	Joint5	Joint6	Joint7	Joint8
387	3162	3416	3420	3420
388	3162	3163	3416	3416
389	3155	3156	3163	3163
390	3146	3147	3156	3156
391	3158	3152	3153	3153
392	3158	3159	3164	3164
393	3142	3145	3147	3147
394	3137	3136	3145	3145
395	3151	3150	3152	3152
396	3139	3140	3151	3151
397	3128	3129	3139	3139
398	3122	3123	3126	3126
399	3122	3126	3128	3128
400	3109	3110	3119	3119
401	3109	3119	3120	3120
402	3109	3120	3122	3122
403	3136	3135	3145	3145
404	3116	3113	3054	3431
405	3113	3111	3431	3431
406	3111	3079	3431	3431
407	3184	3185	3201	3201
408	3203	3212	3068	3068
409	3202	3203	3068	3068
410	3055	3202	3068	3068
411	3055	3068	3030	3030
412	3080	3184	3201	3201
413	3201	3055	3049	3049
414	3080	3201	3049	3049
415	3431	3053	3054	3054
416	3131	3054	3028	3028
417	3145	3040	3432	3432
418	3147	3039	3156	3156
419	3145	3432	3147	3039
420	3156	3038	3163	3163
421	3163	3042	3416	3416
422	3416	3042	3418	3418
423	3418	3042	3433	3433
424	3418	3433	3063	3063

Table 5: Connectivity - Solid, Part 2 of 2

Solid	Joint5	Joint6	Joint7	Joint8
425	3063	3062	3074	3074
426	3074	3073	3389	3389
427	3312	3070	3309	3309
428	3071	3070	3315	3315
429	3072	3071	3321	3321
430	3073	3072	3327	3327
431	3327	3072	3324	3324
432	3324	3072	3321	3321
433	3321	3071	3318	3318
434	3318	3071	3315	3315
435	3315	3070	3312	3312
436	3070	3069	3309	3309
437	3069	3299	3309	3309
438	3069	3075	3299	3299
439	3389	3073	3327	3327
440	3056	3064	3275	3275
441	3056	3275	3075	3075
442	3064	3257	3275	3275
443	3065	3247	3434	3434
444	3434	3247	3257	3257
445	3065	3434	3064	3064
446	3434	3257	3435	3435
447	3064	3434	3435	3435
448	3064	3435	3257	3257
449	3067	3227	3229	3229
450	3066	3246	3065	3247
451	3067	3229	3066	3246
452	3068	3217	3067	3227
453	3220	3221	3223	3223
454	3222	3223	3234	3234
455	3233	3234	3236	3236
456	3235	3236	3241	3241
457	3240	3241	3243	3243
458	3431	3079	3053	3053
459	3156	3039	3038	3038
460	3163	3038	3042	3042
461	3135	3131	3040	3040
462	3145	3135	3040	3040

Table 5: Connectivity - Solid, Part 2 of 2

Solid	Joint5	Joint6	Joint7	Joint8
463	3040	3131	3028	3028
464	3209	3216	3208	3208
465	3209	3221	3216	3216
466	3192	3196	3198	3198
467	3196	3207	3198	3198
468	3196	3209	3207	3207
469	3174	3436	3175	3178
470	3104	3437	3105	3105
471	3109	3437	3104	3104
472	3437	3167	3105	3105
473	3437	3169	3167	3167
474	3437	3438	3169	3169
475	3180	3439	3181	3181
476	3181	3439	3194	3194
477	3194	3439	3195	3195
478	3439	3196	3195	3195
479	3180	3440	3439	3439
480	3441	3440	3442	3442
481	3086	3443	3173	3173
482	3174	3444	3436	3436
483	3170	3445	3092	3092
484	3095	3446	3170	3170
485	3168	3447	3095	3095
486	3169	3448	3166	3166
487	3438	3449	3169	3169
488	3449	3448	3169	3169
489	3178	3450	3180	3180
490	3180	3442	3440	3440
491	3178	3451	3450	3450
492	3451	3452	3450	3450
493	3452	3441	3450	3180
494	3441	3442	3180	3180
495	3436	3453	3178	3178
496	3454	3455	3444	3444
497	3456	3457	3443	3443
498	3458	3459	3172	3172
499	3460	3461	3171	3171
500	3462	3463	3445	3445

Table 5: Connectivity - Solid, Part 2 of 2

Solid	Joint5	Joint6	Joint7	Joint8
501	3464	3465	3170	3170
502	3466	3467	3447	3447
503	3468	3469	3168	3168
504	3470	3471	3448	3448
505	3449	3472	3448	3448
506	3438	3472	3449	3449
507	3472	3470	3448	3448
508	3448	3471	3166	3166
509	3471	3468	3166	3166
510	3166	3468	3168	3168
511	3473	3469	3468	3468
512	3470	3474	3471	3471
513	3474	3473	3471	3468
514	3475	3473	3474	3474
515	3470	3475	3474	3474
516	3472	3475	3470	3470
517	3438	3475	3472	3472
518	3437	3475	3438	3438
519	3453	3451	3178	3178
520	3476	3477	3453	3453
521	3455	3476	3444	3436
522	3476	3453	3436	3436
523	3174	3454	3444	3444
524	3443	3457	3173	3478
525	3478	3479	3173	3173
526	3173	3479	3174	3174
527	3480	3481	3479	3454
528	3482	3483	3457	3478
529	3484	3485	3486	3458
530	3487	3488	3461	3489
531	3490	3491	3465	3462
532	3492	3493	3469	3466
533	3473	3492	3469	3469
534	3469	3466	3168	3447
535	3475	3492	3473	3473
536	3493	3494	3495	3496
537	3493	3495	3466	3467
538	3495	3497	3467	3464

Table 5: Connectivity - Solid, Part 2 of 2

Solid	Joint5	Joint6	Joint7	Joint8
539	3497	3465	3464	3464
540	3447	3467	3095	3095
541	3467	3446	3095	3095
542	3467	3464	3446	3446
543	3464	3170	3446	3446
544	3465	3462	3170	3445
545	3445	3463	3092	3092
546	3092	3460	3171	3171
547	3463	3460	3092	3092
548	3498	3499	3463	3460
549	3462	3498	3463	3463
550	3499	3461	3460	3460
551	3499	3487	3461	3461
552	3498	3500	3499	3499
553	3491	3498	3462	3462
554	3495	3496	3497	3497
555	3501	3502	3455	3476
556	3502	3477	3476	3476
557	3502	3503	3477	3477
558	3477	3503	3453	3451
559	3503	3452	3451	3451
560	3503	3441	3452	3452
561	3504	3505	3459	3456
562	3489	3506	3507	3486
563	3508	3484	3488	3506
564	3506	3484	3486	3486
565	3488	3506	3489	3489
566	3491	3500	3498	3498
567	3461	3489	3171	3171
568	3171	3489	3507	3507
569	3172	3459	3086	3086
570	3086	3456	3443	3443
571	3459	3456	3086	3086
572	3456	3505	3457	3457
573	3505	3482	3457	3457
574	3505	3509	3482	3482
575	3458	3504	3459	3459
576	3458	3485	3504	3504

Table 5: Connectivity - Solid, Part 2 of 2

Solid	Joint5	Joint6	Joint7	Joint8
577	3485	3509	3505	3505
578	3485	3505	3504	3504
579	3500	3487	3499	3499
580	3490	3500	3491	3491
581	3494	3500	3490	3490
582	3494	3490	3496	3496
583	3496	3465	3497	3497
584	3496	3490	3465	3465
585	3492	3494	3493	3493
586	3475	3494	3492	3492
587	3509	3483	3482	3482
588	3481	3455	3454	3454
589	3479	3454	3174	3174
590	3478	3480	3479	3479
591	3483	3480	3478	3478
592	3481	3501	3455	3455
593	3487	3508	3488	3488
594	3500	3508	3487	3487
595	3508	3485	3484	3484
596	3508	3509	3485	3485
597	3481	3510	3501	3501
598	3480	3510	3481	3481
599	3483	3510	3480	3480
600	3509	3510	3483	3483
601	3510	3502	3501	3501
602	3502	4099	3503	3503
603	3510	4099	3502	3502
604	3503	4099	3441	3441
605	4099	3440	3441	3441
606	4099	3439	3440	3440
607	3406	3388	3349	3349
608	3359	3371	4100	4100
609	3372	3359	4100	4100
610	4101	3356	3373	3373
611	3374	3356	4101	4101
612	4102	3354	3375	3375
613	3376	3354	4102	4102
614	3361	3363	4103	4103

Table 5: Connectivity - Solid, Part 2 of 2

Solid	Joint5	Joint6	Joint7	Joint8
615	1577	3361	4103	4103
616	4103	3363	3379	3379
617	1577	4103	3379	3379
618	4104	3342	3353	3353
619	3352	3342	4104	4104
620	4104	3353	3380	3380
621	3352	4104	3380	3380
622	3299	3298	4105	4105
623	3309	4105	3306	3306
624	4105	3298	3306	3306
625	4106	3327	3326	3326
626	3330	4106	3326	3326
627	3389	4106	3330	3330
628	3389	3327	4106	4106
629	3309	3299	4105	4105
630	3486	3458	4107	3172
631	3507	3486	4107	4107
632	3171	3507	4107	4107
633	3088	4107	3172	3172
634	3171	4107	3088	3088
635	4640	4641	4642	4643
636	4109	4110	4109	4110
637	4641	4644	4643	4645
638	4110	4112	4110	4112
639	4644	4646	4645	4647
640	4112	4114	4112	4114
641	4646	4648	4647	4649
642	4114	4116	4114	4116
643	4648	4650	4649	4651
644	4116	4118	4116	4118
645	4650	4652	4651	4653
646	4118	4120	4118	4120
647	4652	4654	4653	4655
648	4120	4122	4120	4122
649	4654	4656	4655	4657
650	4122	4124	4122	4124
651	4656	4658	4657	4659
652	4124	4126	4124	4126

Table 5: Connectivity - Solid, Part 2 of 2

Solid	Joint5	Joint6	Joint7	Joint8
653	4658	4660	4659	4661
654	4126	4128	4126	4128
655	4660	4662	4661	4663
656	4128	4130	4128	4130
657	4662	4664	4663	4665
658	4130	4132	4130	4132
659	4664	4666	4665	4667
660	4132	4134	4132	4134
661	4666	4668	4667	4669
662	4134	4135	4134	4135
663	4670	4671	4640	4641
664	4137	4138	4109	4110
665	4671	4672	4641	4644
666	4138	4140	4110	4112
667	4672	4673	4644	4646
668	4140	4141	4112	4114
669	4673	4674	4646	4648
670	4141	4143	4114	4116
671	4674	4675	4648	4650
672	4143	4144	4116	4118
673	4675	4676	4650	4652
674	4144	4146	4118	4120
675	4676	4677	4652	4654
676	4146	4147	4120	4122
677	4677	4678	4654	4656
678	4147	4149	4122	4124
679	4678	4679	4656	4658
680	4149	4150	4124	4126
681	4679	4680	4658	4660
682	4150	4152	4126	4128
683	4680	4681	4660	4662
684	4152	4153	4128	4130
685	4681	4682	4662	4664
686	4153	4155	4130	4132
687	4682	4683	4664	4666
688	4155	4156	4132	4134
689	4683	4684	4666	4668
690	4156	4158	4134	4135

Table 5: Connectivity - Solid, Part 2 of 2

Solid	Joint5	Joint6	Joint7	Joint8
691	4685	4686	4670	4671
692	4137	4138	4137	4138
693	4686	4687	4671	4672
694	4138	4140	4138	4140
695	4687	4688	4672	4673
696	4140	4141	4140	4141
697	4688	4689	4673	4674
698	4141	4143	4141	4143
699	4689	4690	4674	4675
700	4143	4144	4143	4144
701	4690	4691	4675	4676
702	4144	4146	4144	4146
703	4691	4692	4676	4677
704	4146	4147	4146	4147
705	4692	4693	4677	4678
706	4147	4149	4147	4149
707	4693	4694	4678	4679
708	4149	4150	4149	4150
709	4694	4695	4679	4680
710	4150	4152	4150	4152
711	4695	4696	4680	4681
712	4152	4153	4152	4153
713	4696	4697	4681	4682
714	4153	4155	4153	4155
715	4697	4698	4682	4683
716	4155	4156	4155	4156
717	4698	4699	4683	4684
718	4156	4158	4156	4158
719	4700	4701	4685	4686
720	4166	4167	4137	4138
721	4701	4702	4686	4687
722	4167	4169	4138	4140
723	4702	4703	4687	4688
724	4169	4170	4140	4141
725	4703	4704	4688	4689
726	4170	4172	4141	4143
727	4704	4705	4689	4690
728	4172	4173	4143	4144

Table 5: Connectivity - Solid, Part 2 of 2

Solid	Joint5	Joint6	Joint7	Joint8
729	4705	4706	4690	4691
730	4173	4175	4144	4146
731	4706	4707	4691	4692
732	4175	4176	4146	4147
733	4707	4708	4692	4693
734	4176	4178	4147	4149
735	4708	4709	4693	4694
736	4178	4179	4149	4150
737	4709	4710	4694	4695
738	4179	4181	4150	4152
739	4710	4711	4695	4696
740	4181	4182	4152	4153
741	4711	4712	4696	4697
742	4182	4183	4153	4155
743	4712	4713	4697	4698
744	4183	4184	4155	4156
745	4713	4714	4698	4699
746	4184	4185	4156	4158
747	4715	4716	4700	4701
748	4166	4167	4166	4167
749	4716	4717	4701	4702
750	4167	4169	4167	4169
751	4717	4718	4702	4703
752	4169	4170	4169	4170
753	4718	4719	4703	4704
754	4170	4172	4170	4172
755	4719	4720	4704	4705
756	4172	4173	4172	4173
757	4720	4721	4705	4706
758	4173	4175	4173	4175
759	4721	4722	4706	4707
760	4175	4176	4175	4176
761	4722	4723	4707	4708
762	4176	4178	4176	4178
763	4723	4724	4708	4709
764	4178	4179	4178	4179
765	4724	4725	4709	4710
766	4179	4181	4179	4181

Table 5: Connectivity - Solid, Part 2 of 2

Solid	Joint5	Joint6	Joint7	Joint8
767	4725	4726	4710	4711
768	4181	4182	4181	4182
769	4726	4727	4711	4712
770	4182	4183	4182	4183
771	4727	4728	4712	4713
772	4183	4184	4183	4184
773	4728	4729	4713	4714
774	4184	4185	4184	4185
775	4730	4731	4732	4733
776	4192	4192	4193	4193
777	4734	4735	4730	4731
778	4195	4195	4192	4192
779	4736	4737	4734	4735
780	4197	4197	4195	4195
781	4738	4739	4736	4737
782	4199	4199	4197	4197
783	4740	4741	4738	4739
784	4201	4201	4199	4199
785	4742	4730	4743	4732
786	4203	4192	4204	4193
787	4744	4734	4742	4730
788	4205	4195	4203	4192
789	4745	4742	4746	4743
790	4203	4203	4204	4204
791	4747	4744	4745	4742
792	4205	4205	4203	4203
793	4748	4736	4744	4734
794	4209	4197	4205	4195
795	4749	4748	4747	4744
796	4209	4209	4205	4205
797	4750	4745	4751	4746
798	4211	4203	4212	4204
799	4752	4747	4750	4745
800	4213	4205	4211	4203
801	4753	4750	4754	4751
802	4211	4211	4212	4212
803	4755	4752	4753	4750
804	4213	4213	4211	4211

Table 5: Connectivity - Solid, Part 2 of 2

Solid	Joint5	Joint6	Joint7	Joint8
805	4756	4749	4752	4747
806	4217	4209	4213	4205
807	4757	4756	4755	4752
808	4217	4217	4213	4213
809	4758	4738	4748	4736
810	4218	4199	4209	4197
811	4759	4758	4749	4748
812	4218	4218	4209	4209
813	4760	4759	4756	4749
814	4220	4218	4217	4209
815	4761	4760	4757	4756
816	4220	4220	4217	4217
817	4762	4740	4758	4738
818	4223	4201	4218	4199
819	4763	4762	4759	4758
820	4223	4223	4218	4218
821	4764	4763	4760	4759
822	4225	4223	4220	4218
823	4765	4764	4761	4760
824	4225	4225	4220	4220
825	4766	4767	4740	4741
826	4227	4227	4201	4201
827	4768	4766	4762	4740
828	4228	4227	4223	4201
829	4769	4768	4763	4762
830	4228	4228	4223	4223
831	4770	4769	4764	4763
832	4230	4228	4225	4223
833	4771	4770	4765	4764
834	4230	4230	4225	4225
835	4772	4773	4766	4767
836	4233	4233	4227	4227
837	4774	4772	4768	4766
838	4235	4233	4228	4227
839	4775	4774	4769	4768
840	4235	4235	4228	4228
841	4776	4775	4770	4769
842	4237	4235	4230	4228

Table 5: Connectivity - Solid, Part 2 of 2

Solid	Joint5	Joint6	Joint7	Joint8
843	4777	4776	4771	4770
844	4237	4237	4230	4230
845	4778	4779	4772	4773
846	4238	4238	4233	4233
847	4780	4778	4774	4772
848	4239	4238	4235	4233
849	4781	4780	4775	4774
850	4239	4239	4235	4235
851	4782	4781	4776	4775
852	4240	4239	4237	4235
853	4783	4782	4777	4776
854	4240	4240	4237	4237
855	4784	4785	4778	4779
856	4243	4243	4238	4238
857	4786	4784	4780	4778
858	4245	4243	4239	4238
859	4787	4786	4781	4780
860	4245	4245	4239	4239
861	4788	4787	4782	4781
862	4248	4245	4240	4239
863	4789	4788	4783	4782
864	4248	4248	4240	4240
865	4790	4791	4789	4788
866	4252	4252	4248	4248
867	4791	4792	4788	4787
868	4252	4254	4248	4245
869	4792	4793	4787	4786
870	4254	4254	4245	4245
871	4793	4794	4786	4784
872	4254	4257	4245	4243
873	4794	4795	4784	4785
874	4257	4257	4243	4243
875	4796	4797	4798	4799
876	4262	4263	4262	4263
877	4797	4800	4799	4801
878	4263	4266	4263	4266
879	4800	4802	4801	4803
880	4266	4267	4266	4267

Table 5: Connectivity - Solid, Part 2 of 2

Solid	Joint5	Joint6	Joint7	Joint8
881	4802	4804	4803	4805
882	4267	4269	4267	4269
883	4804	4806	4805	4807
884	4269	4272	4269	4272
885	4806	4808	4807	4809
886	4272	4275	4272	4275
887	4808	4810	4809	4811
888	4275	4276	4275	4276
889	4810	4812	4811	4813
890	4276	4279	4276	4279
891	4812	4814	4813	4815
892	4279	4282	4279	4282
893	4814	4816	4815	4817
894	4282	4284	4282	4284
895	4816	4818	4817	4819
896	4284	4285	4284	4285
897	4818	4820	4819	4821
898	4285	4288	4285	4288
899	4820	4822	4821	4823
900	4288	4291	4288	4291
901	4822	4824	4823	4825
902	4291	4293	4291	4293
903	4826	4827	4796	4797
904	4295	4296	4262	4263
905	4827	4828	4797	4800
906	4296	4298	4263	4266
907	4828	4829	4800	4802
908	4298	4299	4266	4267
909	4829	4830	4802	4804
910	4299	4300	4267	4269
911	4830	4831	4804	4806
912	4300	4302	4269	4272
913	4831	4832	4806	4808
914	4302	4304	4272	4275
915	4832	4833	4808	4810
916	4304	4305	4275	4276
917	4833	4834	4810	4812
918	4305	4307	4276	4279

Table 5: Connectivity - Solid, Part 2 of 2

Solid	Joint5	Joint6	Joint7	Joint8
919	4834	4835	4812	4814
920	4307	4309	4279	4282
921	4835	4836	4814	4816
922	4309	4310	4282	4284
923	4836	4837	4816	4818
924	4310	4311	4284	4285
925	4837	4838	4818	4820
926	4311	4313	4285	4288
927	4838	4839	4820	4822
928	4313	4315	4288	4291
929	4839	4840	4822	4824
930	4315	4316	4291	4293
931	4841	4842	4826	4827
932	4295	4296	4295	4296
933	4842	4843	4827	4828
934	4296	4298	4296	4298
935	4843	4844	4828	4829
936	4298	4299	4298	4299
937	4844	4845	4829	4830
938	4299	4300	4299	4300
939	4845	4846	4830	4831
940	4300	4302	4300	4302
941	4846	4847	4831	4832
942	4302	4304	4302	4304
943	4847	4848	4832	4833
944	4304	4305	4304	4305
945	4848	4849	4833	4834
946	4305	4307	4305	4307
947	4849	4850	4834	4835
948	4307	4309	4307	4309
949	4850	4851	4835	4836
950	4309	4310	4309	4310
951	4851	4852	4836	4837
952	4310	4311	4310	4311
953	4852	4853	4837	4838
954	4311	4313	4311	4313
955	4853	4854	4838	4839
956	4313	4315	4313	4315

Table 5: Connectivity - Solid, Part 2 of 2

Solid	Joint5	Joint6	Joint7	Joint8
957	4854	4855	4839	4840
958	4315	4316	4315	4316
959	4856	4857	4841	4842
960	4331	4332	4295	4296
961	4857	4858	4842	4843
962	4332	4334	4296	4298
963	4858	4859	4843	4844
964	4334	4335	4298	4299
965	4859	4860	4844	4845
966	4335	4337	4299	4300
967	4860	4861	4845	4846
968	4337	4339	4300	4302
969	4861	4862	4846	4847
970	4339	4341	4302	4304
971	4862	4863	4847	4848
972	4341	4342	4304	4305
973	4863	4864	4848	4849
974	4342	4344	4305	4307
975	4864	4865	4849	4850
976	4344	4346	4307	4309
977	4865	4866	4850	4851
978	4346	4348	4309	4310
979	4866	4867	4851	4852
980	4348	4349	4310	4311
981	4867	4868	4852	4853
982	4349	4351	4311	4313
983	4868	4869	4853	4854
984	4351	4353	4313	4315
985	4869	4870	4854	4855
986	4353	4355	4315	4316
987	4871	4872	4856	4857
988	4331	4332	4331	4332
989	4872	4873	4857	4858
990	4332	4334	4332	4334
991	4873	4874	4858	4859
992	4334	4335	4334	4335
993	4874	4875	4859	4860
994	4335	4337	4335	4337

Table 5: Connectivity - Solid, Part 2 of 2

Solid	Joint5	Joint6	Joint7	Joint8
995	4875	4876	4860	4861
996	4337	4339	4337	4339
997	4876	4877	4861	4862
998	4339	4341	4339	4341
999	4877	4878	4862	4863
1000	4341	4342	4341	4342
1001	4878	4879	4863	4864
1002	4342	4344	4342	4344
1003	4879	4880	4864	4865
1004	4344	4346	4344	4346
1005	4880	4881	4865	4866
1006	4346	4348	4346	4348
1007	4881	4882	4866	4867
1008	4348	4349	4348	4349
1009	4882	4883	4867	4868
1010	4349	4351	4349	4351
1011	4883	4884	4868	4869
1012	4351	4353	4351	4353
1013	4884	4885	4869	4870
1014	4353	4355	4353	4355
1015	4886	4887	4888	4889
1016	4370	4370	4371	4371
1017	4890	4891	4886	4887
1018	4373	4373	4370	4370
1019	4892	4893	4890	4891
1020	4375	4375	4373	4373
1021	4894	4895	4892	4893
1022	4377	4377	4375	4375
1023	4896	4897	4894	4895
1024	4379	4379	4377	4377
1025	4898	4886	4899	4888
1026	4381	4370	4382	4371
1027	4900	4890	4898	4886
1028	4384	4373	4381	4370
1029	4901	4898	4902	4899
1030	4381	4381	4382	4382
1031	4903	4900	4901	4898
1032	4384	4384	4381	4381

Table 5: Connectivity - Solid, Part 2 of 2

Solid	Joint5	Joint6	Joint7	Joint8
1033	4904	4892	4900	4890
1034	4386	4375	4384	4373
1035	4905	4904	4903	4900
1036	4386	4386	4384	4384
1037	4906	4901	4907	4902
1038	4389	4381	4390	4382
1039	4908	4903	4906	4901
1040	4392	4384	4389	4381
1041	4909	4906	4910	4907
1042	4389	4389	4390	4390
1043	4911	4908	4909	4906
1044	4392	4392	4389	4389
1045	4912	4905	4908	4903
1046	4394	4386	4392	4384
1047	4913	4912	4911	4908
1048	4394	4394	4392	4392
1049	4914	4894	4904	4892
1050	4397	4377	4386	4375
1051	4915	4914	4905	4904
1052	4397	4397	4386	4386
1053	4916	4915	4912	4905
1054	4399	4397	4394	4386
1055	4917	4916	4913	4912
1056	4399	4399	4394	4394
1057	4918	4896	4914	4894
1058	4400	4379	4397	4377
1059	4919	4918	4915	4914
1060	4400	4400	4397	4397
1061	4920	4919	4916	4915
1062	4402	4400	4399	4397
1063	4921	4920	4917	4916
1064	4402	4402	4399	4399
1065	4922	4923	4896	4897
1066	4405	4405	4379	4379
1067	4924	4922	4918	4896
1068	4407	4405	4400	4379
1069	4925	4924	4919	4918
1070	4407	4407	4400	4400

Table 5: Connectivity - Solid, Part 2 of 2

Solid	Joint5	Joint6	Joint7	Joint8
1071	4926	4925	4920	4919
1072	4409	4407	4402	4400
1073	4927	4926	4921	4920
1074	4409	4409	4402	4402
1075	4928	4929	4922	4923
1076	4411	4411	4405	4405
1077	4930	4928	4924	4922
1078	4412	4411	4407	4405
1079	4931	4930	4925	4924
1080	4412	4412	4407	4407
1081	4932	4931	4926	4925
1082	4414	4412	4409	4407
1083	4933	4932	4927	4926
1084	4414	4414	4409	4409
1085	4934	4935	4928	4929
1086	4416	4416	4411	4411
1087	4936	4934	4930	4928
1088	4417	4416	4412	4411
1089	4937	4936	4931	4930
1090	4417	4417	4412	4412
1091	4938	4937	4932	4931
1092	4418	4417	4414	4412
1093	4939	4938	4933	4932
1094	4418	4418	4414	4414
1095	4940	4941	4934	4935
1096	4421	4421	4416	4416
1097	4942	4940	4936	4934
1098	4423	4421	4417	4416
1099	4943	4942	4937	4936
1100	4423	4423	4417	4417
1101	4944	4943	4938	4937
1102	4426	4423	4418	4417
1103	4945	4944	4939	4938
1104	4426	4426	4418	4418
1105	4946	4947	4945	4944
1106	4430	4430	4426	4426
1107	4947	4948	4944	4943
1108	4430	4432	4426	4423

Table 5: Connectivity - Solid, Part 2 of 2

Solid	Joint5	Joint6	Joint7	Joint8
1109	4948	4949	4943	4942
1110	4432	4432	4423	4423
1111	4949	4950	4942	4940
1112	4432	4435	4423	4421
1113	4950	4951	4940	4941
1114	4435	4435	4421	4421
1115	4952	4953	4790	4791
1116	4436	4436	4252	4252
1117	4953	4954	4791	4792
1118	4436	C1	4252	4254
1119	4954	4955	4792	4793
1120	C1	C1	4254	4254
1121	4955	4956	4793	4794
1122	C1	4438	4254	4257
1123	4956	4957	4794	4795
1124	4438	4438	4257	4257
1125	4958	4959	4952	4953
1126	4439	4439	4436	4436
1127	4959	4960	4953	4954
1128	4439	4440	4436	C1
1129	4960	4961	4954	4955
1130	4440	4440	C1	C1
1131	4961	4962	4955	4956
1132	4440	4441	C1	4438
1133	4962	4963	4956	4957
1134	4441	4442	4438	4438
1135	4964	4640	4965	4642
1136	4444	4109	4444	4109
1137	4966	4670	4964	4640
1138	C8	4137	4444	4109
1139	4967	4685	4966	4670
1140	C8	4137	C8	4137
1141	4968	4700	4967	4685
1142	4447	4166	C8	4137
1143	4969	4715	4968	4700
1144	4447	4166	4447	4166
1145	4970	4964	4971	4965
1146	4450	4444	4451	4444

Table 5: Connectivity - Solid, Part 2 of 2

Solid	Joint5	Joint6	Joint7	Joint8
1147	4972	4966	4970	4964
1148	4453	C8	4450	4444
1149	4973	4967	4972	4966
1150	4454	C8	4453	C8
1151	4974	4968	4973	4967
1152	4456	4447	4454	C8
1153	4975	4969	4974	4968
1154	4456	4447	4456	4447
1155	4963	4962	4976	4977
1156	4442	4441	4457	4458
1157	4962	4961	4977	4978
1158	4441	4440	4458	4459
1159	4979	4963	4980	4976
1160	4460	4442	4461	4457
1161	4961	4960	4978	4981
1162	4440	4440	4459	4459
1163	4957	4963	4979	4979
1164	4438	4442	4460	4460
1165	4978	4981	4982	4983
1166	4459	4459	4462	4462
1167	4977	4978	4984	4982
1168	4458	4459	4463	4462
1169	4976	4977	4985	4984
1170	4457	4458	4464	4463
1171	4980	4976	4986	4985
1172	4461	4457	4465	4464
1173	4987	4980	4988	4986
1174	4466	4461	4467	4465
1175	4982	4983	4989	4990
1176	4462	4462	4468	4468
1177	4984	4982	4991	4989
1178	4463	4462	4468	4468
1179	4985	4984	4992	4991
1180	4464	4463	4469	4468
1181	4986	4985	4993	4992
1182	4465	4464	4470	4469
1183	4988	4986	4970	4993
1184	4467	4465	4450	4470

Table 5: Connectivity - Solid, Part 2 of 2

Solid	Joint5	Joint6	Joint7	Joint8
1185	4993	4992	4994	4995
1186	4470	4469	4471	4472
1187	4994	4995	4973	4996
1188	4471	4472	4454	4473
1189	4992	4991	4995	4997
1190	4469	4468	4472	4474
1191	4995	4997	4996	4998
1192	4472	4474	4473	4473
1193	4996	4998	4999	5000
1194	4473	4473	4475	4473
1195	4973	4996	4974	4999
1196	4454	4473	4456	4475
1197	4972	4994	4973	4973
1198	4453	4471	4454	4454
1199	4970	4993	4972	4994
1200	4450	4470	4453	4471
1201	4971	4988	4970	4970
1202	4451	4467	4450	4450
1203	5001	4979	4987	4980
1204	4460	4460	4466	4461
1205	5002	4987	4971	4988
1206	4466	4466	4451	4467
1207	5001	4957	4979	4979
1208	4460	4438	4460	4460
1209	4959	4958	4981	5003
1210	4439	4439	4459	4459
1211	4960	4959	4981	4981
1212	4440	4439	4459	4459
1213	4989	4990	4997	5004
1214	4468	4468	4474	4474
1215	4991	4989	4997	4997
1216	4468	4468	4474	4474
1217	5005	4975	4999	4974
1218	4475	4456	4475	4456
1219	5005	4999	5000	5000
1220	4475	4475	4473	4473
1221	4997	5004	5000	5000
1222	4474	4474	4473	4473

Table 5: Connectivity - Solid, Part 2 of 2

Solid	Joint5	Joint6	Joint7	Joint8
1223	4981	5003	4983	5006
1224	4459	4459	4462	4462
1225	4983	5006	4990	4990
1226	4462	4462	4468	4468
1227	5007	5001	4987	4987
1228	4467	4460	4466	4466
1229	5008	5009	4971	5007
1230	4479	4479	4451	4467
1231	4965	5009	5008	5008
1232	4444	4479	4479	4479
1233	5010	4796	5011	4798
1234	4480	4262	4480	4262
1235	5012	5013	5014	5015
1236	4481	4331	4482	4262
1237	5016	4856	5012	5013
1238	4483	4331	4481	4331
1239	4856	5016	4871	5017
1240	4331	4483	4331	4483
1241	5016	5018	5019	5020
1242	4483	4485	4483	4485
1243	5012	5021	5016	5018
1244	4481	4486	4483	4485
1245	5014	5022	5012	5021
1246	4482	C3	4481	4486
1247	5011	5023	5010	5024
1248	4480	4488	4480	4488
1249	5018	5025	5020	5026
1250	4485	4489	4485	4490
1251	5021	5027	5018	5025
1252	4486	4491	4485	4489
1253	5022	5028	5021	5027
1254	C3	4492	4486	4491
1255	5024	5029	5022	5028
1256	4488	4493	C3	4492
1257	5023	5030	5024	5029
1258	4488	4493	4488	4493
1259	5011	5031	5023	5023
1260	4480	4488	4488	4488

Table 5: Connectivity - Solid, Part 2 of 2

Solid	Joint5	Joint6	Joint7	Joint8
1261	5028	5032	5027	5033
1262	4492	4495	4491	4496
1263	5027	5033	5025	5034
1264	4491	4496	4489	4497
1265	5025	5034	5026	5035
1266	4489	4497	4490	4498
1267	5029	5036	5028	5032
1268	4493	4499	4492	4495
1269	5030	5037	5029	5036
1270	4493	4499	4493	4499
1271	5037	5038	5036	5039
1272	4499	4500	4499	4500
1273	5036	5039	5032	5040
1274	4499	4500	4495	4501
1275	5032	5040	5033	5041
1276	4495	4501	4496	4502
1277	5033	5041	5034	5042
1278	4496	4502	4497	4503
1279	5034	5042	5035	5043
1280	4497	4503	4498	4504
1281	5039	5044	5040	5045
1282	4500	4505	4501	4505
1283	5040	5045	5041	5046
1284	4501	4505	4502	4506
1285	5041	5046	5042	5047
1286	4502	4506	4503	4507
1287	5042	5047	5043	5048
1288	4503	4507	4504	4508
1289	5045	5049	5046	5050
1290	4505	4509	4506	4510
1291	5046	5050	5047	5051
1292	4506	4510	4507	4511
1293	5047	5051	5048	5052
1294	4507	4511	4508	4512
1295	5049	5053	5050	5054
1296	4509	4513	4510	4514
1297	5050	5054	5051	5055
1298	4510	4514	4511	4515

Table 5: Connectivity - Solid, Part 2 of 2

Solid	Joint5	Joint6	Joint7	Joint8
1299	5051	5055	5052	5056
1300	4511	4515	4512	C2
1301	5048	5052	5057	5058
1302	4508	4512	4517	4518
1303	5043	5048	5059	5057
1304	4504	4508	4504	4517
1305	5035	5043	5060	5059
1306	4498	4504	4498	4504
1307	5044	5061	5045	5049
1308	4505	4509	4505	4509
1309	5053	5062	5054	5063
1310	4513	4519	4514	4519
1311	5054	5063	5055	5064
1312	4514	4519	4515	4520
1313	5055	5064	5056	5065
1314	4515	4520	C2	4521
1315	5062	5066	5063	5067
1316	4519	4522	4519	4522
1317	5063	5067	5064	5068
1318	4519	4522	4520	4523
1319	5052	5056	5058	5069
1320	4512	C2	4518	4204
1321	5056	5065	5069	5070
1322	C2	4521	4204	4204
1323	5064	5068	5065	4751
1324	4520	4523	4521	4212
1325	5068	5071	4751	5072
1326	4523	4526	4212	4212
1327	5065	4751	5070	5070
1328	4521	4212	4204	4204
1329	5058	5069	5073	5073
1330	4518	4204	4193	4193
1331	5031	5074	5023	5030
1332	4488	4493	4488	4493
1333	5057	5058	5075	5075
1334	4517	4518	4517	4517
1335	5075	5058	5076	5073
1336	4517	4518	4517	4193

Table 5: Connectivity - Solid, Part 2 of 2

Solid	Joint5	Joint6	Joint7	Joint8
1337	5066	5077	5067	5067
1338	4522	4522	4522	4522
1339	5068	5067	5071	5078
1340	4523	4522	4526	4530
1341	5067	5077	5078	5078
1342	4522	4522	4530	4530
1343	5017	5016	5019	5019
1344	4483	4483	4483	4483
1345	5026	5035	5079	5060
1346	4490	4498	4490	4498
1347	5061	5080	5049	5053
1348	4509	4513	4509	4513
1349	5080	5081	5053	5062
1350	4513	4519	4513	4519
1351	5074	5082	5030	5037
1352	4493	4499	4493	4499
1353	5082	5038	5037	5037
1354	4499	4500	4499	4499
1355	5038	5083	5039	5044
1356	4500	4505	4500	4505
1357	5083	5084	5044	5061
1358	4505	4509	4505	4509
1359	5084	5080	5061	5061
1360	4509	4513	4509	4509
1361	5081	5066	5062	5062
1362	4519	4522	4519	4519
1363	5017	5019	5085	5020
1364	4483	4483	4485	4485
1365	5020	5026	5085	5079
1366	4485	4490	4485	4490
1367	5060	5059	5086	5086
1368	4498	4504	4504	4504
1369	5059	5057	5086	5075
1370	4504	4517	4504	4517
1371	4796	5087	5015	5014
1372	4262	4537	4262	4482
1373	5087	5024	5014	5022
1374	4537	4488	4482	C3

Table 5: Connectivity - Solid, Part 2 of 2

Solid	Joint5	Joint6	Joint7	Joint8
1375	5088	5089	4889	4888
1376	4538	4539	4371	4371
1377	5090	5091	5088	5089
1378	4541	4541	4538	4539
1379	5091	5092	5089	5093
1380	4541	C5	4539	4543
1381	5093	5094	4899	4899
1382	4543	4390	4382	4382
1383	5092	5095	5093	5094
1384	C5	4544	4543	4390
1385	5095	5096	5094	4907
1386	4544	4390	4390	4390
1387	5097	5098	5095	5096
1388	4545	4546	4544	4390
1389	5099	5097	5092	5095
1390	4547	4545	C5	4544
1391	5100	5099	5091	5092
1392	4548	4547	4541	C5
1393	5101	5100	5090	5091
1394	4541	4548	4541	4541
1395	5102	5103	5099	5097
1396	4547	4550	4547	4545
1397	5103	5104	5097	5098
1398	4550	4551	4545	4546
1399	5104	5105	5098	5106
1400	4551	4552	4546	4552
1401	5098	5106	5096	4910
1402	4546	4552	4390	4390
1403	5107	5108	5104	5105
1404	4553	4554	4551	4552
1405	5109	5107	5103	5104
1406	4555	4553	4550	4551
1407	5110	5111	5107	5108
1408	4556	4557	4553	4554
1409	5112	5113	5111	5114
1410	4558	4559	4557	4560
1411	5111	5114	5108	5115
1412	4557	4560	4554	4561

Table 5: Connectivity - Solid, Part 2 of 2

Solid	Joint5	Joint6	Joint7	Joint8
1413	5114	5116	5115	5115
1414	4560	4562	4561	4561
1415	5113	5117	5114	5116
1416	4559	4563	4560	4562
1417	5118	5119	5113	5117
1418	4564	4565	4559	4563
1419	5119	5120	5117	5121
1420	4565	4566	4563	4566
1421	5122	5123	5119	5120
1422	4567	4568	4565	4566
1423	5124	5122	5118	5119
1424	4564	4567	4564	4565
1425	5109	5110	5107	5107
1426	4555	4556	4553	4553
1427	5100	5102	5099	5099
1428	4548	4547	4547	4547
1429	5102	5109	5103	5103
1430	4547	4555	4550	4550
1431	5100	5125	5102	5102
1432	4548	4547	4547	4547
1433	5112	5118	5113	5113
1434	4558	4564	4559	4559
1435	5126	5124	5112	5118
1436	4558	4564	4558	4564
1437	5121	5120	5127	5128
1438	4566	4566	4570	4570
1439	5120	5123	5128	5129
1440	4566	4568	4570	4571
1441	5123	5130	5129	5131
1442	4568	4572	4571	4573
1443	5122	5132	5130	5133
1444	4567	4574	4572	4575
1445	5130	5133	5131	5134
1446	4572	4575	4573	4576
1447	5133	5135	5134	5136
1448	4575	4575	4576	4576
1449	5127	5128	5137	5138
1450	4570	4570	4577	4577

Table 5: Connectivity - Solid, Part 2 of 2

Solid	Joint5	Joint6	Joint7	Joint8
1451	5134	5136	5139	5140
1452	4576	4576	4578	4579
1453	5140	5141	5139	4825
1454	4579	4578	4578	4293
1455	5139	4825	4824	4824
1456	4578	4293	4293	4293
1457	5124	5132	5122	5122
1458	4564	4574	4567	4567
1459	5122	5130	5123	5123
1460	4567	4572	4568	4568
1461	5138	4870	5137	4885
1462	4577	4355	4577	4355
1463	5134	5139	5142	5142
1464	4576	4578	4579	4579
1465	5143	5136	5135	5135
1466	4575	4576	4575	4575
1467	5142	5139	5144	5144
1468	4579	4578	4580	4580
1469	5131	5145	5129	5146
1470	4573	C4	4571	4582
1471	5129	5146	5128	5138
1472	4571	4582	4570	4577
1473	5134	5142	5145	5144
1474	4576	4579	C4	4580
1475	5144	5147	5145	5146
1476	4580	4583	C4	4582
1477	5146	5147	5138	4870
1478	4582	4583	4577	4355
1479	5144	5148	5147	5147
1480	4580	4584	4583	4583
1481	5139	5148	5144	5144
1482	4578	4584	4580	4580
1483	5139	4824	5148	5148
1484	4578	4293	4584	4584
1485	5096	4910	4907	4907
1486	4390	4390	4390	4390
1487	5089	5093	4888	4899
1488	4539	4543	4371	4382

Table 5: Connectivity - Solid, Part 2 of 2

Solid	Joint5	Joint6	Joint7	Joint8
1489	5109	5149	5110	5150
1490	4555	4555	4556	4556
1491	5102	5125	5109	5149
1492	4547	4547	4555	4555
1493	5110	5150	5112	5126
1494	4556	4556	4558	4558
1495	5110	5112	5111	5111
1496	4556	4558	4557	4557
1497	5126	5151	5124	5124
1498	4558	4564	4564	4564
1499	5150	5152	5126	5153
1500	4556	4556	4558	4558
1501	5126	5153	5151	5151
1502	4558	4558	4564	4564
1503	5106	5115	4910	5154
1504	4552	4561	4390	4561
1505	5105	5115	5106	5106
1506	4552	4561	4552	4552
1507	5105	5108	5115	5115
1508	4552	4554	4561	4561
1509	4910	5154	5155	5155
1510	4390	4561	4561	4561
1511	5154	5115	5155	5116
1512	4561	4561	4561	4562
1513	5117	5121	5116	5116
1514	4563	4566	4562	4562
1515	5151	5156	5124	5132
1516	4564	4574	4564	4574
1517	5156	5157	5132	5132
1518	4574	4574	4574	4574
1519	5157	5158	5132	5132
1520	4574	4575	4574	4574
1521	5158	5135	5132	5133
1522	4575	4575	4574	4575
1523	5149	5152	5150	5150
1524	4555	4556	4556	4556
1525	5134	5145	5131	5131
1526	4576	C4	4573	4573

Table 5: Connectivity - Solid, Part 2 of 2

Solid	Joint5	Joint6	Joint7	Joint8
1527	4796	5010	5087	5024
1528	4262	4480	4537	4488
1529	5159	5141	5136	5140
1530	4576	4578	4576	4579
1531	5160	5161	5156	5157
1532	4574	4574	4574	4574
1533	5157	5161	5135	5143
1534	4574	4574	4575	4575
1535	5162	5116	5121	5121
1536	4562	4562	4566	4566
1537	5163	5164	4946	4947
1538	4587	4587	4430	4430
1539	5164	5165	4947	5166
1540	4587	4588	4430	4432
1541	5165	5167	5166	5168
1542	4588	4589	4432	4432
1543	5167	5169	5168	4950
1544	4589	4590	4432	4435
1545	5169	5170	4950	4951
1546	4590	4590	4435	4435
1547	5171	4668	5172	5173
1548	4592	4135	4593	4158
1549	5172	5173	5174	5175
1550	4593	4158	4594	4158
1551	5174	5175	5176	4714
1552	4594	4158	4595	4185
1553	5176	4714	5177	4729
1554	4595	4185	4596	4185
1555	5178	5179	5180	5171
1556	4597	4592	4598	4592
1557	5180	5171	5181	5172
1558	4598	4592	C7	4593
1559	5181	5172	5182	5174
1560	C7	4593	4600	4594
1561	5182	5174	5183	5176
1562	4600	4594	4601	4595
1563	5183	5176	5184	5177
1564	4601	4595	4601	4596

Table 5: Connectivity - Solid, Part 2 of 2

Solid	Joint5	Joint6	Joint7	Joint8
1565	5185	5179	5178	5178
1566	4602	4592	4597	4597
1567	5186	5178	5187	5180
1568	4602	4597	4603	4598
1569	5187	5180	5188	5181
1570	4603	4598	4604	C7
1571	5188	5181	5189	5182
1572	4604	C7	4605	4600
1573	5189	5182	5190	5183
1574	4605	4600	4606	4601
1575	5191	5185	5186	5178
1576	4607	4602	4602	4597
1577	5192	5186	5193	5187
1578	4608	4602	4609	4603
1579	5194	5195	5196	5196
1580	4610	4611	4612	4612
1581	5196	5195	5197	5191
1582	4612	4611	4613	4607
1583	5197	5191	5192	5186
1584	4613	4607	4608	4602
1585	5198	5192	5199	5193
1586	4614	4608	4615	4609
1587	5200	5197	5198	5192
1588	4616	4613	4614	4608
1589	5201	5196	5200	5197
1590	4617	4612	4616	4613
1591	5202	5194	5201	5196
1592	4618	4610	4617	4612
1593	5164	5163	5202	5194
1594	4587	4587	4618	4610
1595	5165	5164	5203	5202
1596	4588	4587	4619	4618
1597	5167	5165	5204	5203
1598	4589	4588	C6	4619
1599	5169	5167	5205	5204
1600	4590	4589	4621	C6
1601	5206	5205	5207	5204
1602	4622	4621	4623	C6

Table 5: Connectivity - Solid, Part 2 of 2

Solid	Joint5	Joint6	Joint7	Joint8
1603	5207	5204	5208	5203
1604	4623	C6	4624	4619
1605	5208	5203	5209	5202
1606	4624	4619	4625	4618
1607	5209	5202	5201	5201
1608	4625	4618	4617	4617
1609	5209	5201	5210	5200
1610	4625	4617	4626	4616
1611	5208	5209	5211	5210
1612	4624	4625	4627	4626
1613	5207	5208	5212	5211
1614	4623	4624	4628	4627
1615	5211	5210	5213	5214
1616	4627	4626	4629	4630
1617	5210	5200	5214	5198
1618	4626	4616	4630	4614
1619	5214	5198	5215	5199
1620	4630	4614	4631	4615
1621	5193	5187	5216	5188
1622	4609	4603	4632	4604
1623	5199	5193	5217	5216
1624	4615	4609	4633	4632
1625	5216	5188	5218	5189
1626	4632	4604	4634	4605
1627	5215	5199	5219	5217
1628	4631	4615	4615	4633
1629	5218	5189	5190	5190
1630	4634	4605	4606	4606
1631	5213	5214	5215	5215
1632	4629	4630	4631	4631
1633	5217	5216	5218	5218
1634	4633	4632	4634	4634
1635	5206	5207	5212	5212
1636	4622	4623	4628	4628
1637	5220	5206	5221	5212
1638	4622	4622	4635	4628
1639	5169	5206	5170	5220
1640	4590	4622	4590	4622

Table 5: Connectivity - Solid, Part 2 of 2

Solid	Joint5	Joint6	Joint7	Joint8
1641	5169	5205	5206	5206
1642	4590	4621	4622	4622
1643	5212	5211	5222	5213
1644	4628	4627	4636	4629
1645	5212	5222	5221	5223
1646	4628	4636	4635	4636
1647	5222	5213	5224	5215
1648	4636	4629	4631	4631
1649	5223	5222	5224	5224
1650	4636	4636	4631	4631
1651	5224	5215	5219	5219
1652	4631	4631	4615	4615
1653	5219	5217	5225	5225
1654	4615	4633	4633	4633
1655	5225	5217	5218	5218
1656	4633	4633	4634	4634
1657	5195	5185	5191	5191
1658	4611	4602	4607	4607
1659	5179	4669	5171	4668
1660	4592	4135	4592	4135
1661	5190	5183	5184	5184
1662	4606	4601	4601	4601
1663	5226	5190	5184	5184
1664	5227	5225	5226	5226
1665	4633	4633	4605	4605

Table 6: Solid Property Assignments

Table 6: Solid Property Assignments

Solid	SolidProp
1	2' thk slab
2	2' thk slab
3	2' thk slab
4	2' thk slab
5	2' thk slab
6	2' thk slab
7	2' thk slab
8	2' thk slab
9	2' thk slab
10	2' thk slab
11	2' thk slab
12	2' thk slab
13	2' thk slab
14	2' thk slab
15	2' thk slab
16	2' thk slab
17	2' thk slab
18	2' thk slab
19	2' thk slab
20	2' thk slab
21	2' thk slab
22	2' thk slab
23	2' thk slab
24	2' thk slab
25	2' thk slab
26	2' thk slab
27	2' thk slab
28	2' thk slab
29	2' thk slab
30	2' thk slab
31	2' thk slab
32	2' thk slab
33	2' thk slab
34	2' thk slab
35	2' thk slab
36	2' thk slab

Table 6: Solid Property Assignments

Solid	SolidProp
37	2' thk slab
38	2' thk slab
39	2' thk slab
40	2' thk slab
41	2' thk slab
42	2' thk slab
43	2' thk slab
44	2' thk slab
45	2' thk slab
46	2' thk slab
47	2' thk slab
48	2' thk slab
49	2' thk slab
50	2' thk slab
51	2' thk slab
52	2' thk slab
53	2' thk slab
54	2' thk slab
55	2' thk slab
56	2' thk slab
57	2' thk slab
58	2' thk slab
59	2' thk slab
60	2' thk slab
61	2' thk slab
62	2' thk slab
63	2' thk slab
64	2' thk slab
65	2' thk slab
66	2' thk slab
67	2' thk slab
68	2' thk slab
69	2' thk slab
70	2' thk slab
71	2' thk slab
72	2' thk slab
73	2' thk slab
74	2' thk slab
75	2' thk slab

Table 6: Solid Property Assignments

Solid	SolidProp
76	2' thk slab
77	2' thk slab
78	2' thk slab
79	2' thk slab
80	2' thk slab
81	2' thk slab
82	2' thk slab
83	2' thk slab
84	2' thk slab
85	2' thk slab
86	2' thk slab
87	2' thk slab
88	2' thk slab
89	2' thk slab
90	2' thk slab
91	2' thk slab
92	2' thk slab
93	2' thk slab
94	2' thk slab
95	2' thk slab
96	2' thk slab
97	2' thk slab
98	2' thk slab
99	2' thk slab
100	2' thk slab
101	2' thk slab
102	2' thk slab
103	2' thk slab
104	2' thk slab
105	2' thk slab
106	2' thk slab
107	2' thk slab
108	2' thk slab
109	2' thk slab
110	2' thk slab
111	2' thk slab
112	2' thk slab
113	2' thk slab
114	2' thk slab

Table 6: Solid Property Assignments

Solid	SolidProp
115	2' thk slab
116	2' thk slab
117	2' thk slab
118	2' thk slab
119	2' thk slab
120	2' thk slab
121	2' thk slab
122	2' thk slab
123	2' thk slab
124	2' thk slab
125	2' thk slab
126	2' thk slab
127	2' thk slab
128	2' thk slab
129	2' thk slab
130	2' thk slab
131	2' thk slab
132	2' thk slab
133	2' thk slab
134	2' thk slab
135	2' thk slab
136	2' thk slab
137	2' thk slab
138	2' thk slab
139	2' thk slab
140	2' thk slab
141	2' thk slab
142	2' thk slab
143	2' thk slab
144	2' thk slab
145	2' thk slab
146	2' thk slab
147	2' thk slab
148	2' thk slab
149	2' thk slab
150	2' thk slab
151	2' thk slab
152	2' thk slab
153	2' thk slab

Table 6: Solid Property Assignments

Solid	SolidProp
154	2' thk slab
155	2' thk slab
156	2' thk slab
157	2' thk slab
158	2' thk slab
159	2' thk slab
160	2' thk slab
161	2' thk slab
162	2' thk slab
163	2' thk slab
164	2' thk slab
165	2' thk slab
166	2' thk slab
167	2' thk slab
168	2' thk slab
169	2' thk slab
170	2' thk slab
171	2' thk slab
172	2' thk slab
173	2' thk slab
174	2' thk slab
175	2' thk slab
176	2' thk slab
177	2' thk slab
178	2' thk slab
179	2' thk slab
180	2' thk slab
181	2' thk slab
182	2' thk slab
183	2' thk slab
184	2' thk slab
185	2' thk slab
186	2' thk slab
187	2' thk slab
188	2' thk slab
189	2' thk slab
190	2' thk slab
191	2' thk slab
192	2' thk slab

Table 6: Solid Property Assignments

Solid	SolidProp
193	2' thk slab
194	2' thk slab
195	2' thk slab
196	2' thk slab
197	2' thk slab
198	2' thk slab
199	2' thk slab
200	2' thk slab
201	2' thk slab
202	2' thk slab
203	2' thk slab
204	2' thk slab
205	2' thk slab
206	2' thk slab
207	2' thk slab
208	2' thk slab
209	2' thk slab
210	2' thk slab
211	2' thk slab
212	2' thk slab
213	2' thk slab
214	2' thk slab
215	2' thk slab
216	2' thk slab
217	2' thk slab
218	2' thk slab
219	2' thk slab
220	2' thk slab
221	2' thk slab
222	2' thk slab
223	2' thk slab
224	2' thk slab
225	2' thk slab
226	2' thk slab
227	2' thk slab
228	2' thk slab
229	2' thk slab
230	2' thk slab
231	2' thk slab

Table 6: Solid Property Assignments

Solid	SolidProp
232	2' thk slab
233	2' thk slab
234	2' thk slab
235	2' thk slab
236	2' thk slab
237	2' thk slab
238	2' thk slab
239	2' thk slab
240	2' thk slab
241	2' thk slab
242	2' thk slab
243	2' thk slab
244	2' thk slab
245	2' thk slab
246	2' thk slab
247	2' thk slab
248	2' thk slab
249	2' thk slab
250	2' thk slab
251	2' thk slab
252	2' thk slab
253	2' thk slab
254	2' thk slab
255	2' thk slab
256	2' thk slab
257	2' thk slab
258	2' thk slab
259	2' thk slab
260	2' thk slab
261	2' thk slab
262	2' thk slab
263	2' thk slab
264	2' thk slab
265	2' thk slab
266	2' thk slab
267	2' thk slab
268	2' thk slab
269	2' thk slab
270	2' thk slab

Table 6: Solid Property Assignments

Solid	SolidProp
271	2' thk slab
272	2' thk slab
273	2' thk slab
274	2' thk slab
275	2' thk slab
276	2' thk slab
277	2' thk slab
278	2' thk slab
279	2' thk slab
280	2' thk slab
281	2' thk slab
282	2' thk slab
283	2' thk slab
284	2' thk slab
285	2' thk slab
286	2' thk slab
287	2' thk slab
288	2' thk slab
289	2' thk slab
290	2' thk slab
291	2' thk slab
292	2' thk slab
293	2' thk slab
294	2' thk slab
295	2' thk slab
296	2' thk slab
297	2' thk slab
298	2' thk slab
299	2' thk slab
300	2' thk slab
301	2' thk slab
302	2' thk slab
303	2' thk slab
304	2' thk slab
305	2' thk slab
306	2' thk slab
307	2' thk slab
308	2' thk slab
309	2' thk slab

Table 6: Solid Property Assignments

Solid	SolidProp
310	2' thk slab
311	2' thk slab
312	2' thk slab
313	2' thk slab
314	2' thk slab
315	2' thk slab
316	2' thk slab
317	2' thk slab
318	2' thk slab
319	2' thk slab
320	2' thk slab
321	2' thk slab
322	2' thk slab
323	2' thk slab
324	2' thk slab
325	2' thk slab
326	2' thk slab
327	2' thk slab
328	2' thk slab
329	2' thk slab
330	2' thk slab
331	2' thk slab
332	2' thk slab
333	2' thk slab
334	2' thk slab
335	2' thk slab
336	2' thk slab
337	2' thk slab
338	2' thk slab
339	2' thk slab
340	2' thk slab
341	2' thk slab
342	2' thk slab
343	2' thk slab
344	2' thk slab
345	2' thk slab
346	2' thk slab
347	2' thk slab
348	2' thk slab

Table 6: Solid Property Assignments

Solid	SolidProp
349	2' thk slab
350	2' thk slab
351	2' thk slab
352	2' thk slab
353	2' thk slab
354	2' thk slab
355	2' thk slab
356	2' thk slab
357	2' thk slab
358	2' thk slab
359	2' thk slab
360	2' thk slab
361	2' thk slab
362	2' thk slab
363	2' thk slab
364	2' thk slab
365	2' thk slab
366	2' thk slab
367	2' thk slab
368	2' thk slab
369	2' thk slab
370	2' thk slab
371	2' thk slab
372	2' thk slab
373	2' thk slab
374	2' thk slab
375	2' thk slab
376	2' thk slab
377	2' thk slab
378	2' thk slab
379	2' thk slab
380	2' thk slab
381	2' thk slab
382	2' thk slab
383	2' thk slab
384	2' thk slab
385	2' thk slab
386	2' thk slab
387	2' thk slab

Table 6: Solid Property Assignments

Solid	SolidProp
388	2' thk slab
389	2' thk slab
390	2' thk slab
391	2' thk slab
392	2' thk slab
393	2' thk slab
394	2' thk slab
395	2' thk slab
396	2' thk slab
397	2' thk slab
398	2' thk slab
399	2' thk slab
400	2' thk slab
401	2' thk slab
402	2' thk slab
403	2' thk slab
404	2' thk slab
405	2' thk slab
406	2' thk slab
407	2' thk slab
408	2' thk slab
409	2' thk slab
410	2' thk slab
411	2' thk slab
412	2' thk slab
413	2' thk slab
414	2' thk slab
415	2' thk slab
416	2' thk slab
417	2' thk slab
418	2' thk slab
419	2' thk slab
420	2' thk slab
421	2' thk slab
422	2' thk slab
423	2' thk slab
424	2' thk slab
425	2' thk slab
426	2' thk slab

Table 6: Solid Property Assignments

Solid	SolidProp
427	2' thk slab
428	2' thk slab
429	2' thk slab
430	2' thk slab
431	2' thk slab
432	2' thk slab
433	2' thk slab
434	2' thk slab
435	2' thk slab
436	2' thk slab
437	2' thk slab
438	2' thk slab
439	2' thk slab
440	2' thk slab
441	2' thk slab
442	2' thk slab
443	2' thk slab
444	2' thk slab
445	2' thk slab
446	2' thk slab
447	2' thk slab
448	2' thk slab
449	2' thk slab
450	2' thk slab
451	2' thk slab
452	2' thk slab
453	2' thk slab
454	2' thk slab
455	2' thk slab
456	2' thk slab
457	2' thk slab
458	2' thk slab
459	2' thk slab
460	2' thk slab
461	2' thk slab
462	2' thk slab
463	2' thk slab
464	2' thk slab
465	2' thk slab

Table 6: Solid Property Assignments

Solid	SolidProp
466	2' thk slab
467	2' thk slab
468	2' thk slab
469	2' thk slab
470	2' thk slab
471	2' thk slab
472	2' thk slab
473	2' thk slab
474	2' thk slab
475	2' thk slab
476	2' thk slab
477	2' thk slab
478	2' thk slab
479	2' thk slab
480	2' thk slab
481	2' thk slab
482	2' thk slab
483	2' thk slab
484	2' thk slab
485	2' thk slab
486	2' thk slab
487	2' thk slab
488	2' thk slab
489	2' thk slab
490	2' thk slab
491	2' thk slab
492	2' thk slab
493	2' thk slab
494	2' thk slab
495	2' thk slab
496	2' thk slab
497	2' thk slab
498	2' thk slab
499	2' thk slab
500	2' thk slab
501	2' thk slab
502	2' thk slab
503	2' thk slab
504	2' thk slab

Table 6: Solid Property Assignments

Solid	SolidProp
505	2' thk slab
506	2' thk slab
507	2' thk slab
508	2' thk slab
509	2' thk slab
510	2' thk slab
511	2' thk slab
512	2' thk slab
513	2' thk slab
514	2' thk slab
515	2' thk slab
516	2' thk slab
517	2' thk slab
518	2' thk slab
519	2' thk slab
520	2' thk slab
521	2' thk slab
522	2' thk slab
523	2' thk slab
524	2' thk slab
525	2' thk slab
526	2' thk slab
527	2' thk slab
528	2' thk slab
529	2' thk slab
530	2' thk slab
531	2' thk slab
532	2' thk slab
533	2' thk slab
534	2' thk slab
535	2' thk slab
536	2' thk slab
537	2' thk slab
538	2' thk slab
539	2' thk slab
540	2' thk slab
541	2' thk slab
542	2' thk slab
543	2' thk slab

Table 6: Solid Property Assignments

Solid	SolidProp
544	2' thk slab
545	2' thk slab
546	2' thk slab
547	2' thk slab
548	2' thk slab
549	2' thk slab
550	2' thk slab
551	2' thk slab
552	2' thk slab
553	2' thk slab
554	2' thk slab
555	2' thk slab
556	2' thk slab
557	2' thk slab
558	2' thk slab
559	2' thk slab
560	2' thk slab
561	2' thk slab
562	2' thk slab
563	2' thk slab
564	2' thk slab
565	2' thk slab
566	2' thk slab
567	2' thk slab
568	2' thk slab
569	2' thk slab
570	2' thk slab
571	2' thk slab
572	2' thk slab
573	2' thk slab
574	2' thk slab
575	2' thk slab
576	2' thk slab
577	2' thk slab
578	2' thk slab
579	2' thk slab
580	2' thk slab
581	2' thk slab
582	2' thk slab

Table 6: Solid Property Assignments

Solid	SolidProp
583	2' thk slab
584	2' thk slab
585	2' thk slab
586	2' thk slab
587	2' thk slab
588	2' thk slab
589	2' thk slab
590	2' thk slab
591	2' thk slab
592	2' thk slab
593	2' thk slab
594	2' thk slab
595	2' thk slab
596	2' thk slab
597	2' thk slab
598	2' thk slab
599	2' thk slab
600	2' thk slab
601	2' thk slab
602	2' thk slab
603	2' thk slab
604	2' thk slab
605	2' thk slab
606	2' thk slab
607	2' thk slab
608	2' thk slab
609	2' thk slab
610	2' thk slab
611	2' thk slab
612	2' thk slab
613	2' thk slab
614	2' thk slab
615	2' thk slab
616	2' thk slab
617	2' thk slab
618	2' thk slab
619	2' thk slab
620	2' thk slab
621	2' thk slab

Table 6: Solid Property Assignments

Solid	SolidProp
622	2' thk slab
623	2' thk slab
624	2' thk slab
625	2' thk slab
626	2' thk slab
627	2' thk slab
628	2' thk slab
629	2' thk slab
630	2' thk slab
631	2' thk slab
632	2' thk slab
633	2' thk slab
634	2' thk slab
635	6' Trapz Foundation
636	6' Trapz Foundation
637	6' Trapz Foundation
638	6' Trapz Foundation
639	6' Trapz Foundation
640	6' Trapz Foundation
641	6' Trapz Foundation
642	6' Trapz Foundation
643	6' Trapz Foundation
644	6' Trapz Foundation
645	6' Trapz Foundation
646	6' Trapz Foundation
647	6' Trapz Foundation
648	6' Trapz Foundation
649	6' Trapz Foundation
650	6' Trapz Foundation
651	6' Trapz Foundation
652	6' Trapz Foundation
653	6' Trapz Foundation
654	6' Trapz Foundation
655	6' Trapz Foundation
656	6' Trapz Foundation
657	6' Trapz Foundation
658	6' Trapz Foundation
659	6' Trapz Foundation
660	6' Trapz Foundation

Table 6: Solid Property Assignments

Solid	SolidProp
661	6' Trapz Foundation
662	6' Trapz Foundation
663	6' Trapz Foundation
664	6' Trapz Foundation
665	6' Trapz Foundation
666	6' Trapz Foundation
667	6' Trapz Foundation
668	6' Trapz Foundation
669	6' Trapz Foundation
670	6' Trapz Foundation
671	6' Trapz Foundation
672	6' Trapz Foundation
673	6' Trapz Foundation
674	6' Trapz Foundation
675	6' Trapz Foundation
676	6' Trapz Foundation
677	6' Trapz Foundation
678	6' Trapz Foundation
679	6' Trapz Foundation
680	6' Trapz Foundation
681	6' Trapz Foundation
682	6' Trapz Foundation
683	6' Trapz Foundation
684	6' Trapz Foundation
685	6' Trapz Foundation
686	6' Trapz Foundation
687	6' Trapz Foundation
688	6' Trapz Foundation
689	6' Trapz Foundation
690	6' Trapz Foundation
691	6' Trapz Foundation
692	6' Trapz Foundation
693	6' Trapz Foundation
694	6' Trapz Foundation
695	6' Trapz Foundation
696	6' Trapz Foundation
697	6' Trapz Foundation
698	6' Trapz Foundation
699	6' Trapz Foundation

Table 6: Solid Property Assignments

Solid	SolidProp
700	6' Trapz Foundation
701	6' Trapz Foundation
702	6' Trapz Foundation
703	6' Trapz Foundation
704	6' Trapz Foundation
705	6' Trapz Foundation
706	6' Trapz Foundation
707	6' Trapz Foundation
708	6' Trapz Foundation
709	6' Trapz Foundation
710	6' Trapz Foundation
711	6' Trapz Foundation
712	6' Trapz Foundation
713	6' Trapz Foundation
714	6' Trapz Foundation
715	6' Trapz Foundation
716	6' Trapz Foundation
717	6' Trapz Foundation
718	6' Trapz Foundation
719	6' Trapz Foundation
720	6' Trapz Foundation
721	6' Trapz Foundation
722	6' Trapz Foundation
723	6' Trapz Foundation
724	6' Trapz Foundation
725	6' Trapz Foundation
726	6' Trapz Foundation
727	6' Trapz Foundation
728	6' Trapz Foundation
729	6' Trapz Foundation
730	6' Trapz Foundation
731	6' Trapz Foundation
732	6' Trapz Foundation
733	6' Trapz Foundation
734	6' Trapz Foundation
735	6' Trapz Foundation
736	6' Trapz Foundation
737	6' Trapz Foundation
738	6' Trapz Foundation

Table 6: Solid Property Assignments

Solid	SolidProp
739	6' Trapz Foundation
740	6' Trapz Foundation
741	6' Trapz Foundation
742	6' Trapz Foundation
743	6' Trapz Foundation
744	6' Trapz Foundation
745	6' Trapz Foundation
746	6' Trapz Foundation
747	6' Trapz Foundation
748	6' Trapz Foundation
749	6' Trapz Foundation
750	6' Trapz Foundation
751	6' Trapz Foundation
752	6' Trapz Foundation
753	6' Trapz Foundation
754	6' Trapz Foundation
755	6' Trapz Foundation
756	6' Trapz Foundation
757	6' Trapz Foundation
758	6' Trapz Foundation
759	6' Trapz Foundation
760	6' Trapz Foundation
761	6' Trapz Foundation
762	6' Trapz Foundation
763	6' Trapz Foundation
764	6' Trapz Foundation
765	6' Trapz Foundation
766	6' Trapz Foundation
767	6' Trapz Foundation
768	6' Trapz Foundation
769	6' Trapz Foundation
770	6' Trapz Foundation
771	6' Trapz Foundation
772	6' Trapz Foundation
773	6' Trapz Foundation
774	6' Trapz Foundation
775	6' Trapz Foundation
776	6' Trapz Foundation
777	6' Trapz Foundation

Table 6: Solid Property Assignments

Solid	SolidProp
778	6' Trapz Foundation
779	6' Trapz Foundation
780	6' Trapz Foundation
781	6' Trapz Foundation
782	6' Trapz Foundation
783	6' Trapz Foundation
784	6' Trapz Foundation
785	6' Trapz Foundation
786	6' Trapz Foundation
787	6' Trapz Foundation
788	6' Trapz Foundation
789	6' Trapz Foundation
790	6' Trapz Foundation
791	6' Trapz Foundation
792	6' Trapz Foundation
793	6' Trapz Foundation
794	6' Trapz Foundation
795	6' Trapz Foundation
796	6' Trapz Foundation
797	6' Trapz Foundation
798	6' Trapz Foundation
799	6' Trapz Foundation
800	6' Trapz Foundation
801	6' Trapz Foundation
802	6' Trapz Foundation
803	6' Trapz Foundation
804	6' Trapz Foundation
805	6' Trapz Foundation
806	6' Trapz Foundation
807	6' Trapz Foundation
808	6' Trapz Foundation
809	6' Trapz Foundation
810	6' Trapz Foundation
811	6' Trapz Foundation
812	6' Trapz Foundation
813	6' Trapz Foundation
814	6' Trapz Foundation
815	6' Trapz Foundation
816	6' Trapz Foundation

Table 6: Solid Property Assignments

Solid	SolidProp
817	6' Trapz Foundation
818	6' Trapz Foundation
819	6' Trapz Foundation
820	6' Trapz Foundation
821	6' Trapz Foundation
822	6' Trapz Foundation
823	6' Trapz Foundation
824	6' Trapz Foundation
825	6' Trapz Foundation
826	6' Trapz Foundation
827	6' Trapz Foundation
828	6' Trapz Foundation
829	6' Trapz Foundation
830	6' Trapz Foundation
831	6' Trapz Foundation
832	6' Trapz Foundation
833	6' Trapz Foundation
834	6' Trapz Foundation
835	6' Trapz Foundation
836	6' Trapz Foundation
837	6' Trapz Foundation
838	6' Trapz Foundation
839	6' Trapz Foundation
840	6' Trapz Foundation
841	6' Trapz Foundation
842	6' Trapz Foundation
843	6' Trapz Foundation
844	6' Trapz Foundation
845	6' Trapz Foundation
846	6' Trapz Foundation
847	6' Trapz Foundation
848	6' Trapz Foundation
849	6' Trapz Foundation
850	6' Trapz Foundation
851	6' Trapz Foundation
852	6' Trapz Foundation
853	6' Trapz Foundation
854	6' Trapz Foundation
855	6' Trapz Foundation

Table 6: Solid Property Assignments

Solid	SolidProp
856	6' Trapz Foundation
857	6' Trapz Foundation
858	6' Trapz Foundation
859	6' Trapz Foundation
860	6' Trapz Foundation
861	6' Trapz Foundation
862	6' Trapz Foundation
863	6' Trapz Foundation
864	6' Trapz Foundation
865	6' Trapz Foundation
866	6' Trapz Foundation
867	6' Trapz Foundation
868	6' Trapz Foundation
869	6' Trapz Foundation
870	6' Trapz Foundation
871	6' Trapz Foundation
872	6' Trapz Foundation
873	6' Trapz Foundation
874	6' Trapz Foundation
875	6' Trapz Foundation
876	6' Trapz Foundation
877	6' Trapz Foundation
878	6' Trapz Foundation
879	6' Trapz Foundation
880	6' Trapz Foundation
881	6' Trapz Foundation
882	6' Trapz Foundation
883	6' Trapz Foundation
884	6' Trapz Foundation
885	6' Trapz Foundation
886	6' Trapz Foundation
887	6' Trapz Foundation
888	6' Trapz Foundation
889	6' Trapz Foundation
890	6' Trapz Foundation
891	6' Trapz Foundation
892	6' Trapz Foundation
893	6' Trapz Foundation
894	6' Trapz Foundation

Table 6: Solid Property Assignments

Solid	SolidProp
895	6' Trapz Foundation
896	6' Trapz Foundation
897	6' Trapz Foundation
898	6' Trapz Foundation
899	6' Trapz Foundation
900	6' Trapz Foundation
901	6' Trapz Foundation
902	6' Trapz Foundation
903	6' Trapz Foundation
904	6' Trapz Foundation
905	6' Trapz Foundation
906	6' Trapz Foundation
907	6' Trapz Foundation
908	6' Trapz Foundation
909	6' Trapz Foundation
910	6' Trapz Foundation
911	6' Trapz Foundation
912	6' Trapz Foundation
913	6' Trapz Foundation
914	6' Trapz Foundation
915	6' Trapz Foundation
916	6' Trapz Foundation
917	6' Trapz Foundation
918	6' Trapz Foundation
919	6' Trapz Foundation
920	6' Trapz Foundation
921	6' Trapz Foundation
922	6' Trapz Foundation
923	6' Trapz Foundation
924	6' Trapz Foundation
925	6' Trapz Foundation
926	6' Trapz Foundation
927	6' Trapz Foundation
928	6' Trapz Foundation
929	6' Trapz Foundation
930	6' Trapz Foundation
931	6' Trapz Foundation
932	6' Trapz Foundation
933	6' Trapz Foundation

Table 6: Solid Property Assignments

Solid	SolidProp
934	6' Trapz Foundation
935	6' Trapz Foundation
936	6' Trapz Foundation
937	6' Trapz Foundation
938	6' Trapz Foundation
939	6' Trapz Foundation
940	6' Trapz Foundation
941	6' Trapz Foundation
942	6' Trapz Foundation
943	6' Trapz Foundation
944	6' Trapz Foundation
945	6' Trapz Foundation
946	6' Trapz Foundation
947	6' Trapz Foundation
948	6' Trapz Foundation
949	6' Trapz Foundation
950	6' Trapz Foundation
951	6' Trapz Foundation
952	6' Trapz Foundation
953	6' Trapz Foundation
954	6' Trapz Foundation
955	6' Trapz Foundation
956	6' Trapz Foundation
957	6' Trapz Foundation
958	6' Trapz Foundation
959	6' Trapz Foundation
960	6' Trapz Foundation
961	6' Trapz Foundation
962	6' Trapz Foundation
963	6' Trapz Foundation
964	6' Trapz Foundation
965	6' Trapz Foundation
966	6' Trapz Foundation
967	6' Trapz Foundation
968	6' Trapz Foundation
969	6' Trapz Foundation
970	6' Trapz Foundation
971	6' Trapz Foundation
972	6' Trapz Foundation

Table 6: Solid Property Assignments

Solid	SolidProp
973	6' Trapz Foundation
974	6' Trapz Foundation
975	6' Trapz Foundation
976	6' Trapz Foundation
977	6' Trapz Foundation
978	6' Trapz Foundation
979	6' Trapz Foundation
980	6' Trapz Foundation
981	6' Trapz Foundation
982	6' Trapz Foundation
983	6' Trapz Foundation
984	6' Trapz Foundation
985	6' Trapz Foundation
986	6' Trapz Foundation
987	6' Trapz Foundation
988	6' Trapz Foundation
989	6' Trapz Foundation
990	6' Trapz Foundation
991	6' Trapz Foundation
992	6' Trapz Foundation
993	6' Trapz Foundation
994	6' Trapz Foundation
995	6' Trapz Foundation
996	6' Trapz Foundation
997	6' Trapz Foundation
998	6' Trapz Foundation
999	6' Trapz Foundation
1000	6' Trapz Foundation
1001	6' Trapz Foundation
1002	6' Trapz Foundation
1003	6' Trapz Foundation
1004	6' Trapz Foundation
1005	6' Trapz Foundation
1006	6' Trapz Foundation
1007	6' Trapz Foundation
1008	6' Trapz Foundation
1009	6' Trapz Foundation
1010	6' Trapz Foundation
1011	6' Trapz Foundation

Table 6: Solid Property Assignments

Solid	SolidProp
1012	6' Trapz Foundation
1013	6' Trapz Foundation
1014	6' Trapz Foundation
1015	6' Trapz Foundation
1016	6' Trapz Foundation
1017	6' Trapz Foundation
1018	6' Trapz Foundation
1019	6' Trapz Foundation
1020	6' Trapz Foundation
1021	6' Trapz Foundation
1022	6' Trapz Foundation
1023	6' Trapz Foundation
1024	6' Trapz Foundation
1025	6' Trapz Foundation
1026	6' Trapz Foundation
1027	6' Trapz Foundation
1028	6' Trapz Foundation
1029	6' Trapz Foundation
1030	6' Trapz Foundation
1031	6' Trapz Foundation
1032	6' Trapz Foundation
1033	6' Trapz Foundation
1034	6' Trapz Foundation
1035	6' Trapz Foundation
1036	6' Trapz Foundation
1037	6' Trapz Foundation
1038	6' Trapz Foundation
1039	6' Trapz Foundation
1040	6' Trapz Foundation
1041	6' Trapz Foundation
1042	6' Trapz Foundation
1043	6' Trapz Foundation
1044	6' Trapz Foundation
1045	6' Trapz Foundation
1046	6' Trapz Foundation
1047	6' Trapz Foundation
1048	6' Trapz Foundation
1049	6' Trapz Foundation
1050	6' Trapz Foundation

Table 6: Solid Property Assignments

Solid	SolidProp
1051	6' Trapz Foundation
1052	6' Trapz Foundation
1053	6' Trapz Foundation
1054	6' Trapz Foundation
1055	6' Trapz Foundation
1056	6' Trapz Foundation
1057	6' Trapz Foundation
1058	6' Trapz Foundation
1059	6' Trapz Foundation
1060	6' Trapz Foundation
1061	6' Trapz Foundation
1062	6' Trapz Foundation
1063	6' Trapz Foundation
1064	6' Trapz Foundation
1065	6' Trapz Foundation
1066	6' Trapz Foundation
1067	6' Trapz Foundation
1068	6' Trapz Foundation
1069	6' Trapz Foundation
1070	6' Trapz Foundation
1071	6' Trapz Foundation
1072	6' Trapz Foundation
1073	6' Trapz Foundation
1074	6' Trapz Foundation
1075	6' Trapz Foundation
1076	6' Trapz Foundation
1077	6' Trapz Foundation
1078	6' Trapz Foundation
1079	6' Trapz Foundation
1080	6' Trapz Foundation
1081	6' Trapz Foundation
1082	6' Trapz Foundation
1083	6' Trapz Foundation
1084	6' Trapz Foundation
1085	6' Trapz Foundation
1086	6' Trapz Foundation
1087	6' Trapz Foundation
1088	6' Trapz Foundation
1089	6' Trapz Foundation

Table 6: Solid Property Assignments

Solid	SolidProp
1090	6' Trapz Foundation
1091	6' Trapz Foundation
1092	6' Trapz Foundation
1093	6' Trapz Foundation
1094	6' Trapz Foundation
1095	6' Trapz Foundation
1096	6' Trapz Foundation
1097	6' Trapz Foundation
1098	6' Trapz Foundation
1099	6' Trapz Foundation
1100	6' Trapz Foundation
1101	6' Trapz Foundation
1102	6' Trapz Foundation
1103	6' Trapz Foundation
1104	6' Trapz Foundation
1105	6' Trapz Foundation
1106	6' Trapz Foundation
1107	6' Trapz Foundation
1108	6' Trapz Foundation
1109	6' Trapz Foundation
1110	6' Trapz Foundation
1111	6' Trapz Foundation
1112	6' Trapz Foundation
1113	6' Trapz Foundation
1114	6' Trapz Foundation
1115	6' Trapz Foundation
1116	6' Trapz Foundation
1117	6' Trapz Foundation
1118	6' Trapz Foundation
1119	6' Trapz Foundation
1120	6' Trapz Foundation
1121	6' Trapz Foundation
1122	6' Trapz Foundation
1123	6' Trapz Foundation
1124	6' Trapz Foundation
1125	6' Trapz Foundation
1126	6' Trapz Foundation
1127	6' Trapz Foundation
1128	6' Trapz Foundation

Table 6: Solid Property Assignments

Solid	SolidProp
1129	6' Trapz Foundation
1130	6' Trapz Foundation
1131	6' Trapz Foundation
1132	6' Trapz Foundation
1133	6' Trapz Foundation
1134	6' Trapz Foundation
1135	6' Trapz Foundation
1136	6' Trapz Foundation
1137	6' Trapz Foundation
1138	6' Trapz Foundation
1139	6' Trapz Foundation
1140	6' Trapz Foundation
1141	6' Trapz Foundation
1142	6' Trapz Foundation
1143	6' Trapz Foundation
1144	6' Trapz Foundation
1145	6' Trapz Foundation
1146	6' Trapz Foundation
1147	6' Trapz Foundation
1148	6' Trapz Foundation
1149	6' Trapz Foundation
1150	6' Trapz Foundation
1151	6' Trapz Foundation
1152	6' Trapz Foundation
1153	6' Trapz Foundation
1154	6' Trapz Foundation
1155	6' Trapz Foundation
1156	6' Trapz Foundation
1157	6' Trapz Foundation
1158	6' Trapz Foundation
1159	6' Trapz Foundation
1160	6' Trapz Foundation
1161	6' Trapz Foundation
1162	6' Trapz Foundation
1163	6' Trapz Foundation
1164	6' Trapz Foundation
1165	6' Trapz Foundation
1166	6' Trapz Foundation
1167	6' Trapz Foundation

Table 6: Solid Property Assignments

Solid	SolidProp
1168	6' Trapz Foundation
1169	6' Trapz Foundation
1170	6' Trapz Foundation
1171	6' Trapz Foundation
1172	6' Trapz Foundation
1173	6' Trapz Foundation
1174	6' Trapz Foundation
1175	6' Trapz Foundation
1176	6' Trapz Foundation
1177	6' Trapz Foundation
1178	6' Trapz Foundation
1179	6' Trapz Foundation
1180	6' Trapz Foundation
1181	6' Trapz Foundation
1182	6' Trapz Foundation
1183	6' Trapz Foundation
1184	6' Trapz Foundation
1185	6' Trapz Foundation
1186	6' Trapz Foundation
1187	6' Trapz Foundation
1188	6' Trapz Foundation
1189	6' Trapz Foundation
1190	6' Trapz Foundation
1191	6' Trapz Foundation
1192	6' Trapz Foundation
1193	6' Trapz Foundation
1194	6' Trapz Foundation
1195	6' Trapz Foundation
1196	6' Trapz Foundation
1197	6' Trapz Foundation
1198	6' Trapz Foundation
1199	6' Trapz Foundation
1200	6' Trapz Foundation
1201	6' Trapz Foundation
1202	6' Trapz Foundation
1203	6' Trapz Foundation
1204	6' Trapz Foundation
1205	6' Trapz Foundation
1206	6' Trapz Foundation

Table 6: Solid Property Assignments

Solid	SolidProp
1207	6' Trapz Foundation
1208	6' Trapz Foundation
1209	6' Trapz Foundation
1210	6' Trapz Foundation
1211	6' Trapz Foundation
1212	6' Trapz Foundation
1213	6' Trapz Foundation
1214	6' Trapz Foundation
1215	6' Trapz Foundation
1216	6' Trapz Foundation
1217	6' Trapz Foundation
1218	6' Trapz Foundation
1219	6' Trapz Foundation
1220	6' Trapz Foundation
1221	6' Trapz Foundation
1222	6' Trapz Foundation
1223	6' Trapz Foundation
1224	6' Trapz Foundation
1225	6' Trapz Foundation
1226	6' Trapz Foundation
1227	6' Trapz Foundation
1228	6' Trapz Foundation
1229	6' Trapz Foundation
1230	6' Trapz Foundation
1231	6' Trapz Foundation
1232	6' Trapz Foundation
1233	6' Trapz Foundation
1234	6' Trapz Foundation
1235	6' Trapz Foundation
1236	6' Trapz Foundation
1237	6' Trapz Foundation
1238	6' Trapz Foundation
1239	6' Trapz Foundation
1240	6' Trapz Foundation
1241	6' Trapz Foundation
1242	6' Trapz Foundation
1243	6' Trapz Foundation
1244	6' Trapz Foundation
1245	6' Trapz Foundation

Table 6: Solid Property Assignments

Solid	SolidProp
1246	6' Trapz Foundation
1247	6' Trapz Foundation
1248	6' Trapz Foundation
1249	6' Trapz Foundation
1250	6' Trapz Foundation
1251	6' Trapz Foundation
1252	6' Trapz Foundation
1253	6' Trapz Foundation
1254	6' Trapz Foundation
1255	6' Trapz Foundation
1256	6' Trapz Foundation
1257	6' Trapz Foundation
1258	6' Trapz Foundation
1259	6' Trapz Foundation
1260	6' Trapz Foundation
1261	6' Trapz Foundation
1262	6' Trapz Foundation
1263	6' Trapz Foundation
1264	6' Trapz Foundation
1265	6' Trapz Foundation
1266	6' Trapz Foundation
1267	6' Trapz Foundation
1268	6' Trapz Foundation
1269	6' Trapz Foundation
1270	6' Trapz Foundation
1271	6' Trapz Foundation
1272	6' Trapz Foundation
1273	6' Trapz Foundation
1274	6' Trapz Foundation
1275	6' Trapz Foundation
1276	6' Trapz Foundation
1277	6' Trapz Foundation
1278	6' Trapz Foundation
1279	6' Trapz Foundation
1280	6' Trapz Foundation
1281	6' Trapz Foundation
1282	6' Trapz Foundation
1283	6' Trapz Foundation
1284	6' Trapz Foundation

Table 6: Solid Property Assignments

Solid	SolidProp
1285	6' Trapz Foundation
1286	6' Trapz Foundation
1287	6' Trapz Foundation
1288	6' Trapz Foundation
1289	6' Trapz Foundation
1290	6' Trapz Foundation
1291	6' Trapz Foundation
1292	6' Trapz Foundation
1293	6' Trapz Foundation
1294	6' Trapz Foundation
1295	6' Trapz Foundation
1296	6' Trapz Foundation
1297	6' Trapz Foundation
1298	6' Trapz Foundation
1299	6' Trapz Foundation
1300	6' Trapz Foundation
1301	6' Trapz Foundation
1302	6' Trapz Foundation
1303	6' Trapz Foundation
1304	6' Trapz Foundation
1305	6' Trapz Foundation
1306	6' Trapz Foundation
1307	6' Trapz Foundation
1308	6' Trapz Foundation
1309	6' Trapz Foundation
1310	6' Trapz Foundation
1311	6' Trapz Foundation
1312	6' Trapz Foundation
1313	6' Trapz Foundation
1314	6' Trapz Foundation
1315	6' Trapz Foundation
1316	6' Trapz Foundation
1317	6' Trapz Foundation
1318	6' Trapz Foundation
1319	6' Trapz Foundation
1320	6' Trapz Foundation
1321	6' Trapz Foundation
1322	6' Trapz Foundation
1323	6' Trapz Foundation

Table 6: Solid Property Assignments

Solid	SolidProp
1324	6' Trapz Foundation
1325	6' Trapz Foundation
1326	6' Trapz Foundation
1327	6' Trapz Foundation
1328	6' Trapz Foundation
1329	6' Trapz Foundation
1330	6' Trapz Foundation
1331	6' Trapz Foundation
1332	6' Trapz Foundation
1333	6' Trapz Foundation
1334	6' Trapz Foundation
1335	6' Trapz Foundation
1336	6' Trapz Foundation
1337	6' Trapz Foundation
1338	6' Trapz Foundation
1339	6' Trapz Foundation
1340	6' Trapz Foundation
1341	6' Trapz Foundation
1342	6' Trapz Foundation
1343	6' Trapz Foundation
1344	6' Trapz Foundation
1345	6' Trapz Foundation
1346	6' Trapz Foundation
1347	6' Trapz Foundation
1348	6' Trapz Foundation
1349	6' Trapz Foundation
1350	6' Trapz Foundation
1351	6' Trapz Foundation
1352	6' Trapz Foundation
1353	6' Trapz Foundation
1354	6' Trapz Foundation
1355	6' Trapz Foundation
1356	6' Trapz Foundation
1357	6' Trapz Foundation
1358	6' Trapz Foundation
1359	6' Trapz Foundation
1360	6' Trapz Foundation
1361	6' Trapz Foundation
1362	6' Trapz Foundation

Table 6: Solid Property Assignments

Solid	SolidProp
1363	6' Trapz Foundation
1364	6' Trapz Foundation
1365	6' Trapz Foundation
1366	6' Trapz Foundation
1367	6' Trapz Foundation
1368	6' Trapz Foundation
1369	6' Trapz Foundation
1370	6' Trapz Foundation
1371	6' Trapz Foundation
1372	6' Trapz Foundation
1373	6' Trapz Foundation
1374	6' Trapz Foundation
1375	6' Trapz Foundation
1376	6' Trapz Foundation
1377	6' Trapz Foundation
1378	6' Trapz Foundation
1379	6' Trapz Foundation
1380	6' Trapz Foundation
1381	6' Trapz Foundation
1382	6' Trapz Foundation
1383	6' Trapz Foundation
1384	6' Trapz Foundation
1385	6' Trapz Foundation
1386	6' Trapz Foundation
1387	6' Trapz Foundation
1388	6' Trapz Foundation
1389	6' Trapz Foundation
1390	6' Trapz Foundation
1391	6' Trapz Foundation
1392	6' Trapz Foundation
1393	6' Trapz Foundation
1394	6' Trapz Foundation
1395	6' Trapz Foundation
1396	6' Trapz Foundation
1397	6' Trapz Foundation
1398	6' Trapz Foundation
1399	6' Trapz Foundation
1400	6' Trapz Foundation
1401	6' Trapz Foundation

Table 6: Solid Property Assignments

Solid	SolidProp
1402	6' Trapz Foundation
1403	6' Trapz Foundation
1404	6' Trapz Foundation
1405	6' Trapz Foundation
1406	6' Trapz Foundation
1407	6' Trapz Foundation
1408	6' Trapz Foundation
1409	6' Trapz Foundation
1410	6' Trapz Foundation
1411	6' Trapz Foundation
1412	6' Trapz Foundation
1413	6' Trapz Foundation
1414	6' Trapz Foundation
1415	6' Trapz Foundation
1416	6' Trapz Foundation
1417	6' Trapz Foundation
1418	6' Trapz Foundation
1419	6' Trapz Foundation
1420	6' Trapz Foundation
1421	6' Trapz Foundation
1422	6' Trapz Foundation
1423	6' Trapz Foundation
1424	6' Trapz Foundation
1425	6' Trapz Foundation
1426	6' Trapz Foundation
1427	6' Trapz Foundation
1428	6' Trapz Foundation
1429	6' Trapz Foundation
1430	6' Trapz Foundation
1431	6' Trapz Foundation
1432	6' Trapz Foundation
1433	6' Trapz Foundation
1434	6' Trapz Foundation
1435	6' Trapz Foundation
1436	6' Trapz Foundation
1437	6' Trapz Foundation
1438	6' Trapz Foundation
1439	6' Trapz Foundation
1440	6' Trapz Foundation

Table 6: Solid Property Assignments

Solid	SolidProp
1441	6' Trapz Foundation
1442	6' Trapz Foundation
1443	6' Trapz Foundation
1444	6' Trapz Foundation
1445	6' Trapz Foundation
1446	6' Trapz Foundation
1447	6' Trapz Foundation
1448	6' Trapz Foundation
1449	6' Trapz Foundation
1450	6' Trapz Foundation
1451	6' Trapz Foundation
1452	6' Trapz Foundation
1453	6' Trapz Foundation
1454	6' Trapz Foundation
1455	6' Trapz Foundation
1456	6' Trapz Foundation
1457	6' Trapz Foundation
1458	6' Trapz Foundation
1459	6' Trapz Foundation
1460	6' Trapz Foundation
1461	6' Trapz Foundation
1462	6' Trapz Foundation
1463	6' Trapz Foundation
1464	6' Trapz Foundation
1465	6' Trapz Foundation
1466	6' Trapz Foundation
1467	6' Trapz Foundation
1468	6' Trapz Foundation
1469	6' Trapz Foundation
1470	6' Trapz Foundation
1471	6' Trapz Foundation
1472	6' Trapz Foundation
1473	6' Trapz Foundation
1474	6' Trapz Foundation
1475	6' Trapz Foundation
1476	6' Trapz Foundation
1477	6' Trapz Foundation
1478	6' Trapz Foundation
1479	6' Trapz Foundation

Table 6: Solid Property Assignments

Solid	SolidProp
1480	6' Trapz Foundation
1481	6' Trapz Foundation
1482	6' Trapz Foundation
1483	6' Trapz Foundation
1484	6' Trapz Foundation
1485	6' Trapz Foundation
1486	6' Trapz Foundation
1487	6' Trapz Foundation
1488	6' Trapz Foundation
1489	6' Trapz Foundation
1490	6' Trapz Foundation
1491	6' Trapz Foundation
1492	6' Trapz Foundation
1493	6' Trapz Foundation
1494	6' Trapz Foundation
1495	6' Trapz Foundation
1496	6' Trapz Foundation
1497	6' Trapz Foundation
1498	6' Trapz Foundation
1499	6' Trapz Foundation
1500	6' Trapz Foundation
1501	6' Trapz Foundation
1502	6' Trapz Foundation
1503	6' Trapz Foundation
1504	6' Trapz Foundation
1505	6' Trapz Foundation
1506	6' Trapz Foundation
1507	6' Trapz Foundation
1508	6' Trapz Foundation
1509	6' Trapz Foundation
1510	6' Trapz Foundation
1511	6' Trapz Foundation
1512	6' Trapz Foundation
1513	6' Trapz Foundation
1514	6' Trapz Foundation
1515	6' Trapz Foundation
1516	6' Trapz Foundation
1517	6' Trapz Foundation
1518	6' Trapz Foundation

Table 6: Solid Property Assignments

Solid	SolidProp
1519	6' Trapz Foundation
1520	6' Trapz Foundation
1521	6' Trapz Foundation
1522	6' Trapz Foundation
1523	6' Trapz Foundation
1524	6' Trapz Foundation
1525	6' Trapz Foundation
1526	6' Trapz Foundation
1527	6' Trapz Foundation
1528	6' Trapz Foundation
1529	6' Trapz Foundation
1530	6' Trapz Foundation
1531	6' Trapz Foundation
1532	6' Trapz Foundation
1533	6' Trapz Foundation
1534	6' Trapz Foundation
1535	6' Trapz Foundation
1536	6' Trapz Foundation
1537	6' Trapz Foundation
1538	6' Trapz Foundation
1539	6' Trapz Foundation
1540	6' Trapz Foundation
1541	6' Trapz Foundation
1542	6' Trapz Foundation
1543	6' Trapz Foundation
1544	6' Trapz Foundation
1545	6' Trapz Foundation
1546	6' Trapz Foundation
1547	6' Trapz Foundation
1548	6' Trapz Foundation
1549	6' Trapz Foundation
1550	6' Trapz Foundation
1551	6' Trapz Foundation
1552	6' Trapz Foundation
1553	6' Trapz Foundation
1554	6' Trapz Foundation
1555	6' Trapz Foundation
1556	6' Trapz Foundation
1557	6' Trapz Foundation

Table 6: Solid Property Assignments

Solid	SolidProp
1558	6' Trapz Foundation
1559	6' Trapz Foundation
1560	6' Trapz Foundation
1561	6' Trapz Foundation
1562	6' Trapz Foundation
1563	6' Trapz Foundation
1564	6' Trapz Foundation
1565	6' Trapz Foundation
1566	6' Trapz Foundation
1567	6' Trapz Foundation
1568	6' Trapz Foundation
1569	6' Trapz Foundation
1570	6' Trapz Foundation
1571	6' Trapz Foundation
1572	6' Trapz Foundation
1573	6' Trapz Foundation
1574	6' Trapz Foundation
1575	6' Trapz Foundation
1576	6' Trapz Foundation
1577	6' Trapz Foundation
1578	6' Trapz Foundation
1579	6' Trapz Foundation
1580	6' Trapz Foundation
1581	6' Trapz Foundation
1582	6' Trapz Foundation
1583	6' Trapz Foundation
1584	6' Trapz Foundation
1585	6' Trapz Foundation
1586	6' Trapz Foundation
1587	6' Trapz Foundation
1588	6' Trapz Foundation
1589	6' Trapz Foundation
1590	6' Trapz Foundation
1591	6' Trapz Foundation
1592	6' Trapz Foundation
1593	6' Trapz Foundation
1594	6' Trapz Foundation
1595	6' Trapz Foundation
1596	6' Trapz Foundation

Table 6: Solid Property Assignments

Solid	SolidProp
1597	6' Trapz Foundation
1598	6' Trapz Foundation
1599	6' Trapz Foundation
1600	6' Trapz Foundation
1601	6' Trapz Foundation
1602	6' Trapz Foundation
1603	6' Trapz Foundation
1604	6' Trapz Foundation
1605	6' Trapz Foundation
1606	6' Trapz Foundation
1607	6' Trapz Foundation
1608	6' Trapz Foundation
1609	6' Trapz Foundation
1610	6' Trapz Foundation
1611	6' Trapz Foundation
1612	6' Trapz Foundation
1613	6' Trapz Foundation
1614	6' Trapz Foundation
1615	6' Trapz Foundation
1616	6' Trapz Foundation
1617	6' Trapz Foundation
1618	6' Trapz Foundation
1619	6' Trapz Foundation
1620	6' Trapz Foundation
1621	6' Trapz Foundation
1622	6' Trapz Foundation
1623	6' Trapz Foundation
1624	6' Trapz Foundation
1625	6' Trapz Foundation
1626	6' Trapz Foundation
1627	6' Trapz Foundation
1628	6' Trapz Foundation
1629	6' Trapz Foundation
1630	6' Trapz Foundation
1631	6' Trapz Foundation
1632	6' Trapz Foundation
1633	6' Trapz Foundation
1634	6' Trapz Foundation
1635	6' Trapz Foundation

Table 6: Solid Property Assignments

Solid	SolidProp
1636	6' Trapz Foundation
1637	6' Trapz Foundation
1638	6' Trapz Foundation
1639	6' Trapz Foundation
1640	6' Trapz Foundation
1641	6' Trapz Foundation
1642	6' Trapz Foundation
1643	6' Trapz Foundation
1644	6' Trapz Foundation
1645	6' Trapz Foundation
1646	6' Trapz Foundation
1647	6' Trapz Foundation
1648	6' Trapz Foundation
1649	6' Trapz Foundation
1650	6' Trapz Foundation
1651	6' Trapz Foundation
1652	6' Trapz Foundation
1653	6' Trapz Foundation
1654	6' Trapz Foundation
1655	6' Trapz Foundation
1656	6' Trapz Foundation
1657	6' Trapz Foundation
1658	6' Trapz Foundation
1659	6' Trapz Foundation
1660	6' Trapz Foundation
1661	6' Trapz Foundation
1662	6' Trapz Foundation
1663	6' Trapz Foundation
1664	6' Trapz Foundation
1665	6' Trapz Foundation

8-5-2 Material properties

This section provides material property information for materials used in the model.

Table 7: Material Properties 02 - Basic Mechanical Properties

Table 7: Material Properties 02 - Basic Mechanical Properties

Material	UnitWeight	UnitMass	E1	G12	U12	A1
	Kip/ft3	Kip-s2/ft4	Kip/ft2	Kip/ft2		1/F
3000Psi	1.5000E-01	4.6621E-03	449570.68	187321.12	0.200000	5.5000E-06
4000Psi	1.5000E-01	4.6621E-03	519119.50	216299.79	0.200000	5.5000E-06
A615Gr60	4.9000E-01	1.5230E-02	4176000.00			6.5000E-06
A992Fy50	4.9000E-01	1.5230E-02	4176000.00	1606153.85	0.300000	6.5000E-06
Timber	3.4320E-02	1.0667E-03	113760.00	43753.85	0.300000	6.5000E-06

Table 8: Material Properties 03a - Steel Data

Table 8: Material Properties 03a - Steel Data

Material	Fy	Fu	FinalSlope
	Kip/ft2	Kip/ft2	
A992Fy50	7200.00	9360.00	-0.100000

Table 9: Material Properties 03b - Concrete Data

Table 9: Material Properties 03b - Concrete Data

Material	Fc	FinalSlope
	Kip/ft2	
3000Psi	432.00	-0.100000
4000Psi	576.00	-0.100000

Table 10: Material Properties 03e - Rebar Data

Table 10: Material Properties 03e - Rebar Data

Material	Fy Kip/ft2	Fu Kip/ft2	FinalSlope
A615Gr60	8640.00	12960.00	-0.100000

8-5-3 Section properties

This section provides section property information for objects used in the model.

8-5-3-1 Frames

Table 11: Frame Section Properties 01 - General, Part 1 of 4

Table 11: Frame Section Properties 01 - General, Part 1 of 4

SectionName	Material	Shape	t3 ft	t2 ft	tf ft	tw ft	t2b ft	tfb ft
12" Timber_Batter	Timber	Circle	1.00000					
12" Timber_Grid	Timber	Circle	1.00000					
12" Timber_Off Grid	Timber	Circle	1.00000					
FSEC1	A992Fy50	I/Wide Flange	1.00000	0.41667	0.03167	0.02083	0.41667	0.03167
Half Foundation	4000Psi	SD Section						

Table 11: Frame Section Properties 01 - General, Part 2 of 4

Table 11: Frame Section Properties 01 - General, Part 2 of 4

SectionName	Area ft2	TorsConst ft4	I33 ft4	I22 ft4	AS2 ft2	AS3 ft2
12" Timber_Batter	0.7854	0.098175	0.049087	0.049087	0.7069	0.7069
12" Timber_Grid	0.7854	0.098175	0.049087	0.049087	0.7069	0.7069

Table 11: Frame Section Properties 01 - General, Part 2 of 4

SectionName	Area	TorsConst	I33	I22	AS2	AS3
	ft2	ft4	ft4	ft4	ft2	ft2
12" Timber_Off Grid	0.7854	0.098175	0.049087	0.049087	0.7069	0.7069
FSEC1	0.0459	0.000011	0.007615	0.000382	0.0208	0.0220
Half Foundation	2206.5400	581599.475	776663.309	215822.599	1931.5448	1597.151

Table 11: Frame Section Properties 01 - General, Part 3 of 4

Table 11: Frame Section Properties 01 - General, Part 3 of 4

SectionName	S33	S22	Z33	Z22	R33	R22
	ft3	ft3	ft3	ft3	ft	ft
12" Timber_Batter	0.09817	0.098175	0.166667	0.166667	0.25000	0.25000
12" Timber_Grid	0.09817	0.098175	0.166667	0.166667	0.25000	0.25000
12" Timber_Off Grid	0.09817	0.098175	0.166667	0.166667	0.25000	0.25000
FSEC1	0.01523	0.001836	0.017346	0.002850	0.40730	0.09128
Half Foundation	21278.4	10498.62415	35178.3663	18504.3294	18.76119	9.88991

Table 11: Frame Section Properties 01 - General, Part 4 of 4

Table 11: Frame Section Properties 01 - General, Part 4 of 4

SectionName	AMod	A2Mod	A3Mod	JMod	I2Mod	I3Mod	MMod	WMod
12" Timber_Batter	0.14600	1.00000	1.00000	1.00000	1.00000	1.00000	1.00000	1.00000
12" Timber_Grid	0.14600	1.00000	1.00000	1.00000	1.00000	1.00000	1.00000	1.00000
12" Timber_Off Grid	0.14600	1.00000	1.00000	1.00000	1.00000	1.00000	1.00000	1.00000
FSEC1	1.00000	1.00000	1.00000	1.00000	1.00000	1.00000	1.00000	1.00000
Half Foundation	1.00000	1.00000	1.00000	1.00000	1.00000	1.00000	1.00000	1.00000

8-5-3-2 Areas

Table 12: Area Section Properties, Part 1 of 3

Table 12: Area Section Properties, Part 1 of 3

Section	Material	AreaType	Type	DrillDOF	Thickness ft	BendThick ft	F11Mod
2' THK Slab	3000Psi	Shell	Shell-Thick	Yes	2.00000	2.00000	1.00000
8' FOUNDATION	3000Psi	Shell	Shell-Thick	Yes	8.00000	8.00000	1.00000

Table 12: Area Section Properties, Part 2 of 3

Table 12: Area Section Properties, Part 2 of 3

Section	F22Mod	F12Mod	M11Mod	M22Mod	M12Mod	V13Mod	V23Mod	MMod
2' THK Slab	1.0000	1.00000	1.000000	1.000000	1.000000	1.000000	1.000000	1.0000
8' FOUNDATION	1.0000	1.00000	1.000000	1.000000	1.000000	1.000000	1.000000	1.0000

Table 12: Area Section Properties, Part 3 of 3

Table 12: Area Section Properties, Part 3 of 3

Section	WMod
2' THK Slab	1.000000
8' FOUNDATION	1.000000

8-5-3-3 Solids

Table 13: Solid Property Definitions

Table 13: Solid Property Definitions

SolidProp	Material	MatAngle A Degrees	MatAngle B Degrees	MatAngle C Degrees
2' thk slab	3000Psi	0.000	0.000	0.000
6' Trapz Foundation	3000Psi	0.000	0.000	0.000

8-5-4 Load patterns

This section provides loading information as applied to the model.

8-5-4-1 Definitions

Table 14: Load Pattern Definitions

Table 14: Load Pattern Definitions

LoadPat	DesignType	SelfWtMult	AutoLoad
DEAD	DEAD	1.000000	
Live	LIVE	0.000000	
Wt of Soil	DEAD	0.000000	
DL Crane	OTHER	0.000000	
WL Y	OTHER	0.000000	
WL X	OTHER	0.000000	
EL X	OTHER	0.000000	
EL Y	OTHER	0.000000	
EL Z	OTHER	0.000000	
Test Lat	OTHER	0.000000	
test moment	OTHER	0.000000	

8-5-5 Load cases

This section provides load case information.

8-5-5-1 Definitions

Table 15: Load Case Definitions

Table 15: Load Case Definitions

Case	Type	InitialCond	ModalCase	BaseCase	DesActOpt	DesignAct
DEAD	LinStatic	Zero			Prog Det	Non-Composite
MODAL	LinModal	Zero			Prog Det	Other
Live	LinStatic	Zero			Prog Det	Short-Term Composite
Wt of Soil	LinStatic	Zero			Prog Det	Non-Composite
DL Crane	LinStatic	Zero			Prog Det	Other
WL +X	LinStatic	Zero			Prog Det	Other
WL +Y	LinStatic	Zero			Prog Det	Other
EL +X	LinStatic	Zero			Prog Det	Other
EL +Y	LinStatic	Zero			Prog Det	Other
EL Z	LinStatic	Zero			Prog Det	Other
Test Lat	LinStatic	Zero			Prog Det	Other
WL -X	LinStatic	Zero			Prog Det	Other
WL -Y	LinStatic	Zero			Prog Det	Other
EL -X	LinStatic	Zero			Prog Det	Other
EL -Y	LinStatic	Zero			Prog Det	Other
test moment	LinStatic	Zero			Prog Det	Other

8-5-5-2 Static case load assignments

Table 16: Case - Static 1 - Load Assignments

Table 16: Case - Static 1 - Load Assignments

Case	LoadType	LoadName	LoadSF
DEAD	Load pattern	DEAD	1.000000
Live	Load pattern	Live	1.000000
Wt of Soil	Load pattern	Wt of Soil	1.000000
DL Crane	Load pattern	DL Crane	1.000000
WL +X	Load pattern	WL X	1.000000
WL +Y	Load pattern	WL Y	1.000000
EL +X	Load pattern	EL X	1.000000
EL +Y	Load pattern	EL Y	1.000000
EL Z	Load pattern	EL Z	1.000000
Test Lat	Load pattern	Test Lat	1.000000
WL -X	Load pattern	WL X	-1.000000
WL -Y	Load pattern	WL Y	-1.000000
EL -X	Load pattern	EL X	-1.000000
EL -Y	Load pattern	EL Y	-1.000000
test moment	Load pattern	test moment	1.000000

8-5-5-3 Response spectrum case load assignments

Table 17: Function - Response Spectrum - User

Table 17: Function - Response Spectrum - User

Name	Period Sec	Accel	FuncDamp
UNIFRS	0.000000	1.000000	0.050000
UNIFRS	1.000000	1.000000	

8-5-6 Load combinations

This section provides load combination information.

Table 18: Combination Definitions

Table 18: Combination Definitions

ComboName	ComboType	CaseName	ScaleFactor
LC1	Linear Add	DEAD	1.400000
LC1		DL Crane	1.400000
LC1		Wt of Soil	1.400000
LC2-1 +X Dir.	Linear Add	DEAD	1.200000
LC2-1 +X Dir.		DL Crane	1.200000
LC2-1 +X Dir.		Wt of Soil	1.200000
LC2-1 +X Dir.		WL +X	1.600000
LC2-2 +Y Dir.	Linear Add	DEAD	1.200000
LC2-2 +Y Dir.		DL Crane	1.200000
LC2-2 +Y Dir.		Wt of Soil	1.200000
LC2-2 +Y Dir.		WL +Y	1.600000
LC3-1 +X Dir.	Linear Add	DEAD	1.200000
LC3-1 +X Dir.		DL Crane	1.200000
LC3-1 +X Dir.		Wt of Soil	1.200000
LC3-1 +X Dir.		EL +X	1.000000
LC3-1 +X Dir.		EL Z	1.000000
LC3-2 +Y Dir.	Linear Add	DEAD	1.200000
LC3-2 +Y Dir.		DL Crane	1.200000
LC3-2 +Y Dir.		Wt of Soil	1.200000
LC3-2 +Y Dir.		EL +Y	1.000000
LC3-2 +Y Dir.		EL Z	1.000000
LC4-1 +X Dir.	Linear Add	DEAD	0.900000
LC4-1 +X Dir.		DL Crane	0.900000
LC4-1 +X Dir.		Wt of Soil	0.900000
LC4-1 +X Dir.		WL +X	1.600000
LC4-2 +Y Dir.	Linear Add	DEAD	0.900000
LC4-2 +Y Dir.		DL Crane	0.900000
LC4-2 +Y Dir.		Wt of Soil	0.900000
LC4-2 +Y Dir.		WL +Y	1.600000
LC5-1 +X Dir.	Linear Add	DEAD	0.900000
LC5-1 +X Dir.		DL Crane	0.900000

Table 18: Combination Definitions

ComboName	ComboType	CaseName	ScaleFactor
LC5-1 +X Dir.		Wt of Soil	0.900000
LC5-1 +X Dir.		EL +X	1.000000
LC5-1 +X Dir.		EL Z	-1.000000
LC5-2 +Y Dir.	Linear Add	DEAD	0.900000
LC5-2 +Y Dir.		DL Crane	0.900000
LC5-2 +Y Dir.		Wt of Soil	0.900000
LC5-2 +Y Dir.		EL +Y	1.000000
LC5-2 +Y Dir.		EL Z	-1.000000
SC-1	Linear Add	DEAD	1.000000
SC-1		DL Crane	1.000000
SC-1		Wt of Soil	1.000000
SC2-1 +X Dir.	Linear Add	DEAD	1.000000
SC2-1 +X Dir.		DL Crane	1.000000
SC2-1 +X Dir.		Wt of Soil	1.000000
SC2-1 +X Dir.		WL +X	1.000000
SC2-2 +Y Dir.	Linear Add	DEAD	1.000000
SC2-2 +Y Dir.		DL Crane	1.000000
SC2-2 +Y Dir.		Wt of Soil	1.000000
SC2-2 +Y Dir.		WL +Y	1.000000
SC3-1 +X Dir.	Linear Add	DEAD	1.000000
SC3-1 +X Dir.		DL Crane	1.000000
SC3-1 +X Dir.		Wt of Soil	1.000000
SC3-1 +X Dir.		EL +X	0.700000
SC3-1 +X Dir.		EL Z	0.700000
SC3-2 +Y Dir.	Linear Add	DEAD	1.000000
SC3-2 +Y Dir.		DL Crane	1.000000
SC3-2 +Y Dir.		Wt of Soil	1.000000
SC3-2 +Y Dir.		EL +Y	0.700000
SC3-2 +Y Dir.		EL Z	0.700000
SC4-1 +X Dir.	Linear Add	DEAD	0.600000
SC4-1 +X Dir.		DL Crane	0.600000
SC4-1 +X Dir.		Wt of Soil	0.600000
SC4-1 +X Dir.		WL +X	1.000000
SC4-2 +Y Dir.	Linear Add	DEAD	0.600000
SC4-2 +Y Dir.		DL Crane	0.600000
SC4-2 +Y Dir.		Wt of Soil	0.600000
SC4-2 +Y Dir.		WL +Y	1.000000

Table 18: Combination Definitions

ComboName	ComboType	CaseName	ScaleFactor
SC5-1 +X Dir.	Linear Add	DEAD	0.600000
SC5-1 +X Dir.		DL Crane	0.600000
SC5-1 +X Dir.		Wt of Soil	0.600000
SC5-1 +X Dir.		EL +X	0.700000
SC5-1 +X Dir.		EL Z	-0.700000
SC5-2 +Y Dir.	Linear Add	DEAD	0.600000
SC5-2 +Y Dir.		DL Crane	0.600000
SC5-2 +Y Dir.		Wt of Soil	0.600000
SC5-2 +Y Dir.		EL +Y	0.700000
SC5-2 +Y Dir.		EL Z	-0.700000
LC2-1 -X Dir.	Linear Add	DEAD	1.200000
LC2-1 -X Dir.		DL Crane	1.200000
LC2-1 -X Dir.		Wt of Soil	1.200000
LC2-1 -X Dir.		WL -X	1.600000
LC2-2 -Y Dir.	Linear Add	DEAD	1.200000
LC2-2 -Y Dir.		DL Crane	1.200000
LC2-2 -Y Dir.		Wt of Soil	1.200000
LC2-2 -Y Dir.		WL -Y	1.600000
LC3-1 -X Dir.	Linear Add	DEAD	1.200000
LC3-1 -X Dir.		DL Crane	1.200000
LC3-1 -X Dir.		Wt of Soil	1.200000
LC3-1 -X Dir.		EL -X	1.000000
LC3-1 -X Dir.		EL Z	1.000000
LC3-2 -Y Dir.	Linear Add	DEAD	1.200000
LC3-2 -Y Dir.		DL Crane	1.200000
LC3-2 -Y Dir.		Wt of Soil	1.200000
LC3-2 -Y Dir.		EL -Y	1.000000
LC3-2 -Y Dir.		EL Z	1.000000
LC4-1 -X Dir.	Linear Add	DEAD	0.900000
LC4-1 -X Dir.		DL Crane	0.900000
LC4-1 -X Dir.		Wt of Soil	0.900000
LC4-1 -X Dir.		WL -X	1.600000
LC4-2 -Y Dir.	Linear Add	DEAD	0.900000
LC4-2 -Y Dir.		DL Crane	0.900000
LC4-2 -Y Dir.		Wt of Soil	0.900000
LC4-2 -Y Dir.		WL -Y	1.600000
LC5-1 -X Dir.	Linear Add	DEAD	0.900000

Table 18: Combination Definitions

ComboName	ComboType	CaseName	ScaleFactor
LC5-1 -X Dir.		DL Crane	0.900000
LC5-1 -X Dir.		Wt of Soil	0.900000
LC5-1 -X Dir.		EL -X	1.000000
LC5-1 -X Dir.		EL Z	-1.000000
LC5-2 -Y Dir.	Linear Add	DEAD	0.900000
LC5-2 -Y Dir.		DL Crane	0.900000
LC5-2 -Y Dir.		Wt of Soil	0.900000
LC5-2 -Y Dir.		EL -Y	1.000000
LC5-2 -Y Dir.		EL Z	-1.000000
SC2-1 -X Dir.	Linear Add	DEAD	1.000000
SC2-1 -X Dir.		DL Crane	1.000000
SC2-1 -X Dir.		Wt of Soil	1.000000
SC2-1 -X Dir.		WL -X	1.000000
SC2-2 -Y Dir.	Linear Add	DEAD	1.000000
SC2-2 -Y Dir.		DL Crane	1.000000
SC2-2 -Y Dir.		Wt of Soil	1.000000
SC2-2 -Y Dir.		WL -Y	1.000000
SC3-1 -X Dir.	Linear Add	DEAD	1.000000
SC3-1 -X Dir.		DL Crane	1.000000
SC3-1 -X Dir.		Wt of Soil	1.000000
SC3-1 -X Dir.		EL -X	0.700000
SC3-1 -X Dir.		EL Z	0.700000
SC3-2 -Y Dir.	Linear Add	DEAD	1.000000
SC3-2 -Y Dir.		DL Crane	1.000000
SC3-2 -Y Dir.		Wt of Soil	1.000000
SC3-2 -Y Dir.		EL -Y	0.700000
SC3-2 -Y Dir.		EL Z	0.700000
SC4-1 -X Dir.	Linear Add	DEAD	0.600000
SC4-1 -X Dir.		DL Crane	0.600000
SC4-1 -X Dir.		Wt of Soil	0.600000
SC4-1 -X Dir.		WL -X	1.000000
SC4-2 -Y Dir.	Linear Add	DEAD	0.600000
SC4-2 -Y Dir.		DL Crane	0.600000
SC4-2 -Y Dir.		Wt of Soil	0.600000
SC4-2 -Y Dir.		WL -Y	1.000000
SC5-1 -X Dir.	Linear Add	DEAD	0.600000
SC5-1 -X Dir.		DL Crane	0.600000

Table 18: Combination Definitions

ComboName	ComboType	CaseName	ScaleFactor
SC5-1 -X Dir.		Wt of Soil	0.600000
SC5-1 -X Dir.		EL -X	0.700000
SC5-1 -X Dir.		EL Z	-0.700000
SC5-2 -Y Dir.	Linear Add	DEAD	0.600000
SC5-2 -Y Dir.		↕ ⁚↕ ⁝↕ ⁚↕ ¼	0.600000
SC5-2 -Y Dir.		Wt of Soil	0.600000
SC5-2 -Y Dir.		EL -Y	0.700000
SC5-2 -Y Dir.		EL Z	-0.700000

8-5-7 Material take-off

This section provides a material take-off.

Table 19: Material List 2 - By Section Property

Table 19: Material List 2 - By Section Property

Section	ObjectType	NumPieces	TotalLength ft	TotalWeight Kip
12" Timber_Grid	Frame	155	697.5000	18.801
12" Timber_Off Grid	Frame	300	1350.0000	36.389
12" Timber_Batter	Frame	36	175.5000	4.731
6' Trapz Foundation	Solid			1633.481
2' thk slab	Solid			1263.900

8-5-8 Design preferences

This section provides the design preferences for each type of design, which typically include material reduction factors, framing type, stress ratio limit, deflection limits, and other code specific items.

8-5-8-1 Steel design

Table 20: Preferences - Steel Design - AISC360-05-IBC2006, Part 1 of 3

Table 20: Preferences - Steel Design - AISC360-05-IBC2006, Part 1 of 3

FrameType	PatLLF	SRatioLimit	SDC	ImpFactor	SystemRho	SystemSds	SystemR	SystemCd
SMF	0.750000	0.950000	D	1.000000	1.000000	0.500000	8.000000	5.5000

Table 20: Preferences - Steel Design - AISC360-05-IBC2006, Part 2 of 3

Table 20: Preferences - Steel Design - AISC360-05-IBC2006, Part 2 of 3

Omega0	NLCoeff	PhiB	PhiC	PhiTY	PhiTF	PhiV	PhiVRolledI	PhiVT
3.00000	0.00200	0.9000	0.900	0.9000	0.7500	0.9000	1.00000	0.90000

Table 20: Preferences - Steel Design - AISC360-05-IBC2006, Part 3 of 3

Table 20: Preferences - Steel Design - AISC360-05-IBC2006, Part 3 of 3

PlugWeld	HSSWelding	HSSReduceT	DLRat	SDLAndLLRat	LLRat	TotalRat	NetRat
Yes	ERW	No	120.00	120.000000	360.00	240.000	240.00

8-5-8-2 Concrete design

Table 21: Preferences - Concrete Design - ACI 318-05/IBC2003, Part 1 of 2

Table 21: Preferences - Concrete Design - ACI 318-05/IBC2003, Part 1 of 2

MinEccen	PatLLF	UFLimit	SeisCat	PhiT
Yes	0.750000	0.950000	D	0.900000

Table 21: Preferences - Concrete Design - ACI 318-05/IBC2003, Part 2 of 2

Table 21: Preferences - Concrete Design - ACI 318-05/IBC2003, Part 2 of 2

PhiCTied	PhiCSpiral	PhiV	PhiVSeismic	PhiVJoint
0.650000	0.700000	0.750000	0.600000	0.850000

8-5-8-3 Aluminum design

Table 22: Preferences - Aluminum Design - AA-ASD 2000

Table 22: Preferences - Aluminum Design - AA-ASD 2000

FrameType	SRatioLimit	LatFact	UseLatFact
Moment Frame	1.000000	1.333333	No

8-5-8-4 Cold formed design

Table 23: Preferences - Cold Formed Design - AISI-ASD96

Table 23: Preferences - Cold Formed Design - AISI-ASD96

FrameType	SRatioLimit	OmegaBS	OmegaBUS	OmegaBLTB	OmegaVS	OmegaVNS	OmegaT	OmegaC
Braced Frame	1.000000	1.670000	1.670000	1.670000	1.670000	1.500000	1.670000	1.800000

8-6
Foundation Model Used for Capping Beam Analysis

License #20D19

SAP2000 Analysis Report

Prepared by
Moffatt & Nichol

Model Name: Cap Beam Analysis-7897-02-20130214-V00_0.sdb

18 February 2013

8-6-1 Model geometry

This section provides model geometry information, including items such as joint coordinates, joint restraints, and element connectivity.

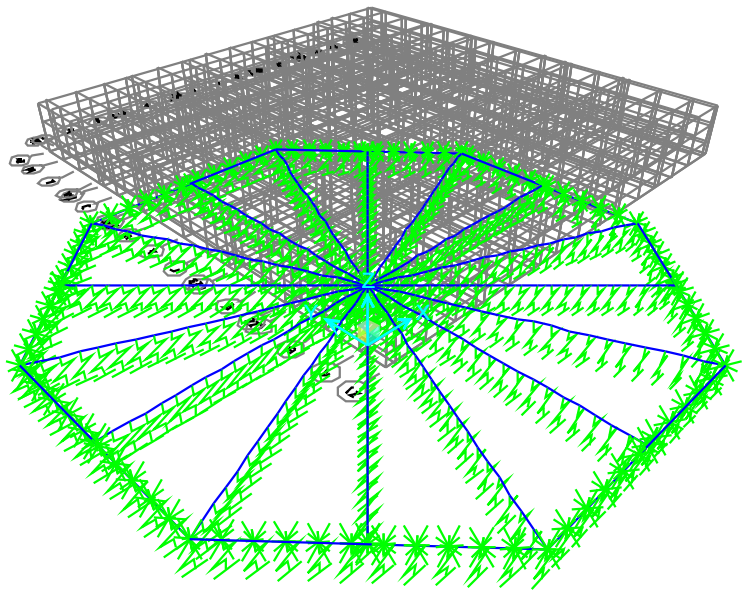

Figure 1: Finite element model

8-6-1-1 Joint coordinates

Table 1: Joint Coordinates

Table 1: Joint Coordinates

Joint	CoordSys	CoordType	GlobalX ft	GlobalY ft	GlobalZ ft
9	GLOBAL	Cartesian	-22.3666	22.3011	8.0000
10	GLOBAL	Cartesian	0.0000	31.4725	8.0000
11	GLOBAL	Cartesian	22.3666	22.3011	8.0000
12	GLOBAL	Cartesian	30.9209	0.0000	8.0000
13	GLOBAL	Cartesian	22.3666	-22.3011	8.0000
14	GLOBAL	Cartesian	0.0000	-31.4725	8.0000
15	GLOBAL	Cartesian	-30.9209	0.0000	8.0000
16	GLOBAL	Cartesian	-22.3666	-22.3011	8.0000
17	GLOBAL	Cartesian	0.0000	0.0000	8.0000
18	GLOBAL	Cartesian	-11.3123	-31.4725	8.0000

Table 1: Joint Coordinates

Joint	CoordSys	CoordType	GlobalX ft	GlobalY ft	GlobalZ ft
19	GLOBAL	Cartesian	-8.8123	-31.4725	8.0000
20	GLOBAL	Cartesian	-6.3123	-31.4725	8.0000
21	GLOBAL	Cartesian	-3.8123	-31.4725	8.0000
22	GLOBAL	Cartesian	-1.3123	-31.4725	8.0000
30	GLOBAL	Cartesian	1.1877	-31.4725	8.0000
31	GLOBAL	Cartesian	3.6877	-31.4725	8.0000
32	GLOBAL	Cartesian	6.1877	-31.4725	8.0000
33	GLOBAL	Cartesian	8.6877	-31.4725	8.0000
34	GLOBAL	Cartesian	11.1877	-31.4725	8.0000
45	GLOBAL	Cartesian	-11.3123	31.4725	8.0000
46	GLOBAL	Cartesian	-8.8123	31.4725	8.0000
47	GLOBAL	Cartesian	-6.3123	31.4725	8.0000
48	GLOBAL	Cartesian	-3.8123	31.4725	8.0000
49	GLOBAL	Cartesian	-1.3123	31.4725	8.0000
50	GLOBAL	Cartesian	1.1877	31.4725	8.0000
51	GLOBAL	Cartesian	3.6877	31.4725	8.0000
52	GLOBAL	Cartesian	6.1877	31.4725	8.0000
53	GLOBAL	Cartesian	8.6877	31.4725	8.0000
54	GLOBAL	Cartesian	11.1877	31.4725	8.0000
55	GLOBAL	Cartesian	-30.9209	-10.6297	8.0000
56	GLOBAL	Cartesian	-30.9209	-8.1297	8.0000
57	GLOBAL	Cartesian	-30.9209	-5.6297	8.0000
58	GLOBAL	Cartesian	-30.9209	-3.1297	8.0000
59	GLOBAL	Cartesian	-30.9209	-0.6297	8.0000
60	GLOBAL	Cartesian	-30.9209	1.8703	8.0000
61	GLOBAL	Cartesian	-30.9209	4.3703	8.0000
62	GLOBAL	Cartesian	-30.9209	6.8703	8.0000
63	GLOBAL	Cartesian	-30.9209	9.3703	8.0000
64	GLOBAL	Cartesian	-30.9209	11.8703	8.0000
65	GLOBAL	Cartesian	30.9209	-10.6297	8.0000
66	GLOBAL	Cartesian	30.9209	-8.1297	8.0000
67	GLOBAL	Cartesian	30.9209	-5.6297	8.0000
68	GLOBAL	Cartesian	30.9209	-3.1297	8.0000
69	GLOBAL	Cartesian	30.9209	-0.6297	8.0000
70	GLOBAL	Cartesian	30.9209	1.8703	8.0000
71	GLOBAL	Cartesian	30.9209	4.3703	8.0000
72	GLOBAL	Cartesian	30.9209	6.8703	8.0000
73	GLOBAL	Cartesian	30.9209	9.3703	8.0000
74	GLOBAL	Cartesian	30.9209	11.8703	8.0000
75	GLOBAL	Cartesian	-29.3656	-14.7972	8.0000
76	GLOBAL	Cartesian	-27.8102	-16.4648	8.0000
77	GLOBAL	Cartesian	-26.2549	-18.1323	8.0000

Table 1: Joint Coordinates

Joint	CoordSys	CoordType	GlobalX ft	GlobalY ft	GlobalZ ft
78	GLOBAL	Cartesian	-24.6996	-19.7998	8.0000
79	GLOBAL	Cartesian	-23.1443	-21.4673	8.0000
80	GLOBAL	Cartesian	-21.5889	-23.1349	8.0000
81	GLOBAL	Cartesian	-20.0336	-24.8024	8.0000
82	GLOBAL	Cartesian	-18.4783	-26.4699	8.0000
83	GLOBAL	Cartesian	-16.9230	-28.1374	8.0000
84	GLOBAL	Cartesian	-15.3676	-29.8050	8.0000
85	GLOBAL	Cartesian	-29.3656	14.7972	8.0000
86	GLOBAL	Cartesian	-27.8102	16.4648	8.0000
87	GLOBAL	Cartesian	-26.2549	18.1323	8.0000
88	GLOBAL	Cartesian	-24.6996	19.7998	8.0000
89	GLOBAL	Cartesian	-23.1443	21.4673	8.0000
90	GLOBAL	Cartesian	-21.5889	23.1349	8.0000
91	GLOBAL	Cartesian	-20.0336	24.8024	8.0000
92	GLOBAL	Cartesian	-18.4783	26.4699	8.0000
93	GLOBAL	Cartesian	-16.9230	28.1374	8.0000
94	GLOBAL	Cartesian	-15.3676	29.8050	8.0000
95	GLOBAL	Cartesian	15.3676	29.8050	8.0000
96	GLOBAL	Cartesian	16.9230	28.1374	8.0000
97	GLOBAL	Cartesian	18.4783	26.4699	8.0000
98	GLOBAL	Cartesian	20.0336	24.8024	8.0000
99	GLOBAL	Cartesian	21.5889	23.1349	8.0000
C1	GLOBAL	Cartesian	13.8123	-31.4725	8.0000
C2	GLOBAL	Cartesian	-13.8123	-31.4725	8.0000
C3	GLOBAL	Cartesian	-30.9209	-13.1297	8.0000
C4	GLOBAL	Cartesian	-30.9209	13.1297	8.0000
C5	GLOBAL	Cartesian	-13.8123	31.4725	8.0000
C6	GLOBAL	Cartesian	13.8123	31.4725	8.0000
C7	GLOBAL	Cartesian	30.9209	13.1297	8.0000
C8	GLOBAL	Cartesian	30.9209	-13.1297	8.0000
100	GLOBAL	Cartesian	23.1443	21.4673	8.0000
101	GLOBAL	Cartesian	24.6996	19.7998	8.0000
102	GLOBAL	Cartesian	26.2549	18.1323	8.0000
103	GLOBAL	Cartesian	27.8102	16.4648	8.0000
104	GLOBAL	Cartesian	29.3656	14.7972	8.0000
105	GLOBAL	Cartesian	29.3656	-14.7972	8.0000
106	GLOBAL	Cartesian	27.8102	-16.4648	8.0000
107	GLOBAL	Cartesian	26.2549	-18.1323	8.0000
108	GLOBAL	Cartesian	24.6996	-19.7998	8.0000
109	GLOBAL	Cartesian	23.1443	-21.4673	8.0000
110	GLOBAL	Cartesian	21.5889	-23.1349	8.0000
111	GLOBAL	Cartesian	20.0336	-24.8024	8.0000

Table 1: Joint Coordinates

Joint	CoordSys	CoordType	GlobalX ft	GlobalY ft	GlobalZ ft
112	GLOBAL	Cartesian	18.4783	-26.4699	8.0000
113	GLOBAL	Cartesian	16.9230	-28.1374	8.0000
114	GLOBAL	Cartesian	15.3676	-29.8050	8.0000
115	GLOBAL	Cartesian	13.1217	29.8989	8.0000
116	GLOBAL	Cartesian	12.4311	28.3253	8.0000
117	GLOBAL	Cartesian	11.7405	26.7516	8.0000
118	GLOBAL	Cartesian	11.0498	25.1780	8.0000
119	GLOBAL	Cartesian	10.3592	23.6044	8.0000
120	GLOBAL	Cartesian	9.6686	22.0308	8.0000
121	GLOBAL	Cartesian	8.9780	20.4571	8.0000
122	GLOBAL	Cartesian	8.2874	18.8835	8.0000
123	GLOBAL	Cartesian	7.5968	17.3099	8.0000
124	GLOBAL	Cartesian	6.9062	15.7363	8.0000
125	GLOBAL	Cartesian	6.2155	14.1626	8.0000
126	GLOBAL	Cartesian	5.5249	12.5890	8.0000
127	GLOBAL	Cartesian	4.8343	11.0154	8.0000
128	GLOBAL	Cartesian	4.1437	9.4418	8.0000
129	GLOBAL	Cartesian	3.4531	7.8681	8.0000
130	GLOBAL	Cartesian	2.7625	6.2945	8.0000
131	GLOBAL	Cartesian	2.0718	4.7209	8.0000
132	GLOBAL	Cartesian	1.3812	3.1472	8.0000
133	GLOBAL	Cartesian	0.6906	1.5736	8.0000
134	GLOBAL	Cartesian	-0.6906	-1.5736	8.0000
135	GLOBAL	Cartesian	-1.3812	-3.1473	8.0000
136	GLOBAL	Cartesian	-2.0718	-4.7209	8.0000
137	GLOBAL	Cartesian	-2.7625	-6.2945	8.0000
138	GLOBAL	Cartesian	-3.4531	-7.8681	8.0000
139	GLOBAL	Cartesian	-4.1437	-9.4418	8.0000
140	GLOBAL	Cartesian	-4.8343	-11.0154	8.0000
141	GLOBAL	Cartesian	-5.5249	-12.5890	8.0000
142	GLOBAL	Cartesian	-6.2155	-14.1626	8.0000
143	GLOBAL	Cartesian	-6.9062	-15.7363	8.0000
144	GLOBAL	Cartesian	-7.5968	-17.3099	8.0000
145	GLOBAL	Cartesian	-8.2874	-18.8835	8.0000
146	GLOBAL	Cartesian	-8.9780	-20.4571	8.0000
147	GLOBAL	Cartesian	-9.6686	-22.0308	8.0000
148	GLOBAL	Cartesian	-10.3592	-23.6044	8.0000
149	GLOBAL	Cartesian	-11.0498	-25.1780	8.0000
150	GLOBAL	Cartesian	-11.7405	-26.7516	8.0000
151	GLOBAL	Cartesian	-12.4311	-28.3253	8.0000
152	GLOBAL	Cartesian	-13.1217	-29.8989	8.0000
153	GLOBAL	Cartesian	-13.1217	29.8989	8.0000

Table 1: Joint Coordinates

Joint	CoordSys	CoordType	GlobalX ft	GlobalY ft	GlobalZ ft
154	GLOBAL	Cartesian	-12.4311	28.3253	8.0000
155	GLOBAL	Cartesian	-11.7405	26.7516	8.0000
156	GLOBAL	Cartesian	-11.0498	25.1780	8.0000
157	GLOBAL	Cartesian	-10.3592	23.6044	8.0000
158	GLOBAL	Cartesian	-9.6686	22.0308	8.0000
159	GLOBAL	Cartesian	-8.9780	20.4571	8.0000
160	GLOBAL	Cartesian	-8.2874	18.8835	8.0000
161	GLOBAL	Cartesian	-7.5968	17.3099	8.0000
162	GLOBAL	Cartesian	-6.9062	15.7363	8.0000
163	GLOBAL	Cartesian	-6.2155	14.1626	8.0000
164	GLOBAL	Cartesian	-5.5249	12.5890	8.0000
165	GLOBAL	Cartesian	-4.8343	11.0154	8.0000
166	GLOBAL	Cartesian	-4.1437	9.4418	8.0000
167	GLOBAL	Cartesian	-3.4531	7.8681	8.0000
168	GLOBAL	Cartesian	-2.7625	6.2945	8.0000
169	GLOBAL	Cartesian	-2.0718	4.7209	8.0000
170	GLOBAL	Cartesian	-1.3812	3.1472	8.0000
171	GLOBAL	Cartesian	-0.6906	1.5736	8.0000
172	GLOBAL	Cartesian	0.6906	-1.5736	8.0000
173	GLOBAL	Cartesian	1.3812	-3.1473	8.0000
174	GLOBAL	Cartesian	2.0718	-4.7209	8.0000
175	GLOBAL	Cartesian	2.7625	-6.2945	8.0000
176	GLOBAL	Cartesian	3.4531	-7.8681	8.0000
177	GLOBAL	Cartesian	4.1437	-9.4418	8.0000
178	GLOBAL	Cartesian	4.8343	-11.0154	8.0000
179	GLOBAL	Cartesian	5.5249	-12.5890	8.0000
180	GLOBAL	Cartesian	6.2155	-14.1626	8.0000
181	GLOBAL	Cartesian	6.9062	-15.7363	8.0000
182	GLOBAL	Cartesian	7.5968	-17.3099	8.0000
183	GLOBAL	Cartesian	8.2874	-18.8835	8.0000
184	GLOBAL	Cartesian	8.9780	-20.4571	8.0000
185	GLOBAL	Cartesian	9.6686	-22.0308	8.0000
186	GLOBAL	Cartesian	10.3592	-23.6044	8.0000
187	GLOBAL	Cartesian	11.0498	-25.1780	8.0000
188	GLOBAL	Cartesian	11.7405	-26.7516	8.0000
189	GLOBAL	Cartesian	12.4311	-28.3253	8.0000
190	GLOBAL	Cartesian	13.1217	-29.8989	8.0000
191	GLOBAL	Cartesian	29.3749	12.4732	8.0000
192	GLOBAL	Cartesian	27.8288	11.8167	8.0000
193	GLOBAL	Cartesian	26.2828	11.1602	8.0000
194	GLOBAL	Cartesian	24.7367	10.5038	8.0000
195	GLOBAL	Cartesian	23.1907	9.8473	8.0000

Table 1: Joint Coordinates

Joint	CoordSys	CoordType	GlobalX ft	GlobalY ft	GlobalZ ft
196	GLOBAL	Cartesian	21.6446	9.1908	8.0000
197	GLOBAL	Cartesian	20.0986	8.5343	8.0000
198	GLOBAL	Cartesian	18.5525	7.8778	8.0000
199	GLOBAL	Cartesian	17.0065	7.2213	8.0000
200	GLOBAL	Cartesian	15.4605	6.5649	8.0000
201	GLOBAL	Cartesian	13.9144	5.9084	8.0000
202	GLOBAL	Cartesian	12.3684	5.2519	8.0000
203	GLOBAL	Cartesian	10.8223	4.5954	8.0000
204	GLOBAL	Cartesian	9.2763	3.9389	8.0000
205	GLOBAL	Cartesian	7.7302	3.2824	8.0000
206	GLOBAL	Cartesian	6.1842	2.6259	8.0000
207	GLOBAL	Cartesian	4.6381	1.9695	8.0000
208	GLOBAL	Cartesian	3.0921	1.3130	8.0000
209	GLOBAL	Cartesian	1.5460	0.6565	8.0000
210	GLOBAL	Cartesian	-1.5460	-0.6565	8.0000
211	GLOBAL	Cartesian	-3.0921	-1.3130	8.0000
212	GLOBAL	Cartesian	-4.6381	-1.9695	8.0000
213	GLOBAL	Cartesian	-6.1842	-2.6259	8.0000
214	GLOBAL	Cartesian	-7.7302	-3.2824	8.0000
215	GLOBAL	Cartesian	-9.2763	-3.9389	8.0000
216	GLOBAL	Cartesian	-10.8223	-4.5954	8.0000
217	GLOBAL	Cartesian	-12.3684	-5.2519	8.0000
218	GLOBAL	Cartesian	-13.9144	-5.9084	8.0000
219	GLOBAL	Cartesian	-15.4605	-6.5649	8.0000
220	GLOBAL	Cartesian	-17.0065	-7.2213	8.0000
221	GLOBAL	Cartesian	-18.5525	-7.8778	8.0000
222	GLOBAL	Cartesian	-20.0986	-8.5343	8.0000
223	GLOBAL	Cartesian	-21.6446	-9.1908	8.0000
224	GLOBAL	Cartesian	-23.1907	-9.8473	8.0000
225	GLOBAL	Cartesian	-24.7367	-10.5038	8.0000
226	GLOBAL	Cartesian	-26.2828	-11.1602	8.0000
227	GLOBAL	Cartesian	-27.8288	-11.8167	8.0000
228	GLOBAL	Cartesian	-29.3749	-12.4732	8.0000
229	GLOBAL	Cartesian	29.3749	-12.4732	8.0000
230	GLOBAL	Cartesian	27.8288	-11.8167	8.0000
231	GLOBAL	Cartesian	26.2828	-11.1602	8.0000
232	GLOBAL	Cartesian	24.7367	-10.5038	8.0000
233	GLOBAL	Cartesian	23.1907	-9.8473	8.0000
234	GLOBAL	Cartesian	21.6446	-9.1908	8.0000
235	GLOBAL	Cartesian	20.0986	-8.5343	8.0000
236	GLOBAL	Cartesian	18.5525	-7.8778	8.0000
237	GLOBAL	Cartesian	17.0065	-7.2213	8.0000

Table 1: Joint Coordinates

Joint	CoordSys	CoordType	GlobalX ft	GlobalY ft	GlobalZ ft
238	GLOBAL	Cartesian	15.4605	-6.5649	8.0000
239	GLOBAL	Cartesian	13.9144	-5.9084	8.0000
240	GLOBAL	Cartesian	12.3684	-5.2519	8.0000
241	GLOBAL	Cartesian	10.8223	-4.5954	8.0000
242	GLOBAL	Cartesian	9.2763	-3.9389	8.0000
243	GLOBAL	Cartesian	7.7302	-3.2824	8.0000
244	GLOBAL	Cartesian	6.1842	-2.6259	8.0000
245	GLOBAL	Cartesian	4.6381	-1.9695	8.0000
246	GLOBAL	Cartesian	3.0921	-1.3130	8.0000
247	GLOBAL	Cartesian	1.5460	-0.6565	8.0000
248	GLOBAL	Cartesian	-1.5460	0.6565	8.0000
249	GLOBAL	Cartesian	-3.0921	1.3130	8.0000
250	GLOBAL	Cartesian	-4.6381	1.9695	8.0000
251	GLOBAL	Cartesian	-6.1842	2.6259	8.0000
252	GLOBAL	Cartesian	-7.7302	3.2824	8.0000
253	GLOBAL	Cartesian	-9.2763	3.9389	8.0000
254	GLOBAL	Cartesian	-10.8223	4.5954	8.0000
255	GLOBAL	Cartesian	-12.3684	5.2519	8.0000
256	GLOBAL	Cartesian	-13.9144	5.9084	8.0000
257	GLOBAL	Cartesian	-15.4605	6.5649	8.0000
258	GLOBAL	Cartesian	-17.0065	7.2213	8.0000
259	GLOBAL	Cartesian	-18.5525	7.8778	8.0000
260	GLOBAL	Cartesian	-20.0986	8.5343	8.0000
261	GLOBAL	Cartesian	-21.6446	9.1908	8.0000
262	GLOBAL	Cartesian	-23.1907	9.8473	8.0000
263	GLOBAL	Cartesian	-24.7367	10.5038	8.0000
264	GLOBAL	Cartesian	-26.2828	11.1602	8.0000
265	GLOBAL	Cartesian	-27.8288	11.8167	8.0000
266	GLOBAL	Cartesian	-29.3749	12.4732	8.0000
267	GLOBAL	Cartesian	21.2483	21.1860	8.0000
268	GLOBAL	Cartesian	20.1299	20.0710	8.0000
269	GLOBAL	Cartesian	19.0116	18.9559	8.0000
270	GLOBAL	Cartesian	17.8933	17.8409	8.0000
271	GLOBAL	Cartesian	16.7750	16.7258	8.0000
272	GLOBAL	Cartesian	15.6566	15.6108	8.0000
273	GLOBAL	Cartesian	14.5383	14.4957	8.0000
274	GLOBAL	Cartesian	13.4200	13.3807	8.0000
275	GLOBAL	Cartesian	12.3016	12.2656	8.0000
276	GLOBAL	Cartesian	11.1833	11.1506	8.0000
277	GLOBAL	Cartesian	10.0650	10.0355	8.0000
278	GLOBAL	Cartesian	8.9466	8.9204	8.0000
279	GLOBAL	Cartesian	7.8283	7.8054	8.0000

Table 1: Joint Coordinates

Joint	CoordSys	CoordType	GlobalX ft	GlobalY ft	GlobalZ ft
280	GLOBAL	Cartesian	6.7100	6.6903	8.0000
281	GLOBAL	Cartesian	5.5917	5.5753	8.0000
282	GLOBAL	Cartesian	4.4733	4.4602	8.0000
283	GLOBAL	Cartesian	3.3550	3.3452	8.0000
284	GLOBAL	Cartesian	2.2367	2.2301	8.0000
285	GLOBAL	Cartesian	1.1183	1.1151	8.0000
286	GLOBAL	Cartesian	-1.1183	-1.1151	8.0000
287	GLOBAL	Cartesian	-2.2367	-2.2301	8.0000
288	GLOBAL	Cartesian	-3.3550	-3.3452	8.0000
289	GLOBAL	Cartesian	-4.4733	-4.4602	8.0000
290	GLOBAL	Cartesian	-5.5917	-5.5753	8.0000
291	GLOBAL	Cartesian	-6.7100	-6.6903	8.0000
292	GLOBAL	Cartesian	-7.8283	-7.8054	8.0000
293	GLOBAL	Cartesian	-8.9466	-8.9204	8.0000
294	GLOBAL	Cartesian	-10.0650	-10.0355	8.0000
295	GLOBAL	Cartesian	-11.1833	-11.1506	8.0000
296	GLOBAL	Cartesian	-12.3016	-12.2656	8.0000
297	GLOBAL	Cartesian	-13.4200	-13.3807	8.0000
298	GLOBAL	Cartesian	-14.5383	-14.4957	8.0000
299	GLOBAL	Cartesian	-15.6566	-15.6108	8.0000
300	GLOBAL	Cartesian	-16.7750	-16.7258	8.0000
301	GLOBAL	Cartesian	-17.8933	-17.8409	8.0000
302	GLOBAL	Cartesian	-19.0116	-18.9559	8.0000
303	GLOBAL	Cartesian	-20.1299	-20.0710	8.0000
304	GLOBAL	Cartesian	-21.2483	-21.1860	8.0000
305	GLOBAL	Cartesian	29.3749	0.0000	8.0000
306	GLOBAL	Cartesian	27.8288	0.0000	8.0000
307	GLOBAL	Cartesian	26.2828	0.0000	8.0000
308	GLOBAL	Cartesian	24.7367	0.0000	8.0000
309	GLOBAL	Cartesian	23.1907	0.0000	8.0000
310	GLOBAL	Cartesian	21.6446	0.0000	8.0000
311	GLOBAL	Cartesian	20.0986	0.0000	8.0000
312	GLOBAL	Cartesian	18.5525	0.0000	8.0000
313	GLOBAL	Cartesian	17.0065	0.0000	8.0000
314	GLOBAL	Cartesian	15.4605	0.0000	8.0000
315	GLOBAL	Cartesian	13.9144	0.0000	8.0000
316	GLOBAL	Cartesian	12.3684	0.0000	8.0000
317	GLOBAL	Cartesian	10.8223	0.0000	8.0000
318	GLOBAL	Cartesian	9.2763	0.0000	8.0000
319	GLOBAL	Cartesian	7.7302	0.0000	8.0000
320	GLOBAL	Cartesian	6.1842	0.0000	8.0000
321	GLOBAL	Cartesian	4.6381	0.0000	8.0000

Table 1: Joint Coordinates

Joint	CoordSys	CoordType	GlobalX ft	GlobalY ft	GlobalZ ft
322	GLOBAL	Cartesian	3.0921	0.0000	8.0000
323	GLOBAL	Cartesian	1.5460	0.0000	8.0000
324	GLOBAL	Cartesian	-1.5460	0.0000	8.0000
325	GLOBAL	Cartesian	-3.0921	0.0000	8.0000
326	GLOBAL	Cartesian	-4.6381	0.0000	8.0000
327	GLOBAL	Cartesian	-6.1842	0.0000	8.0000
328	GLOBAL	Cartesian	-7.7302	0.0000	8.0000
329	GLOBAL	Cartesian	-9.2763	0.0000	8.0000
330	GLOBAL	Cartesian	-10.8223	0.0000	8.0000
331	GLOBAL	Cartesian	-12.3684	0.0000	8.0000
332	GLOBAL	Cartesian	-13.9144	0.0000	8.0000
333	GLOBAL	Cartesian	-15.4605	0.0000	8.0000
334	GLOBAL	Cartesian	-17.0065	0.0000	8.0000
335	GLOBAL	Cartesian	-18.5525	0.0000	8.0000
336	GLOBAL	Cartesian	-20.0986	0.0000	8.0000
337	GLOBAL	Cartesian	-21.6446	0.0000	8.0000
338	GLOBAL	Cartesian	-23.1907	0.0000	8.0000
339	GLOBAL	Cartesian	-24.7367	0.0000	8.0000
340	GLOBAL	Cartesian	-26.2828	0.0000	8.0000
341	GLOBAL	Cartesian	-27.8288	0.0000	8.0000
342	GLOBAL	Cartesian	-29.3749	0.0000	8.0000
343	GLOBAL	Cartesian	21.2483	-21.1860	8.0000
344	GLOBAL	Cartesian	20.1299	-20.0710	8.0000
345	GLOBAL	Cartesian	19.0116	-18.9559	8.0000
346	GLOBAL	Cartesian	17.8933	-17.8409	8.0000
347	GLOBAL	Cartesian	16.7750	-16.7258	8.0000
348	GLOBAL	Cartesian	15.6566	-15.6108	8.0000
349	GLOBAL	Cartesian	14.5383	-14.4957	8.0000
350	GLOBAL	Cartesian	13.4200	-13.3807	8.0000
351	GLOBAL	Cartesian	12.3016	-12.2656	8.0000
352	GLOBAL	Cartesian	11.1833	-11.1506	8.0000
353	GLOBAL	Cartesian	10.0650	-10.0355	8.0000
354	GLOBAL	Cartesian	8.9466	-8.9204	8.0000
355	GLOBAL	Cartesian	7.8283	-7.8054	8.0000
356	GLOBAL	Cartesian	6.7100	-6.6903	8.0000
357	GLOBAL	Cartesian	5.5917	-5.5753	8.0000
358	GLOBAL	Cartesian	4.4733	-4.4602	8.0000
359	GLOBAL	Cartesian	3.3550	-3.3452	8.0000
360	GLOBAL	Cartesian	2.2367	-2.2301	8.0000
361	GLOBAL	Cartesian	1.1183	-1.1151	8.0000
362	GLOBAL	Cartesian	-1.1183	1.1151	8.0000
363	GLOBAL	Cartesian	-2.2367	2.2301	8.0000

Table 1: Joint Coordinates

Joint	CoordSys	CoordType	GlobalX ft	GlobalY ft	GlobalZ ft
364	GLOBAL	Cartesian	-3.3550	3.3452	8.0000
365	GLOBAL	Cartesian	-4.4733	4.4602	8.0000
366	GLOBAL	Cartesian	-5.5917	5.5753	8.0000
367	GLOBAL	Cartesian	-6.7100	6.6903	8.0000
368	GLOBAL	Cartesian	-7.8283	7.8054	8.0000
369	GLOBAL	Cartesian	-8.9466	8.9204	8.0000
370	GLOBAL	Cartesian	-10.0650	10.0355	8.0000
371	GLOBAL	Cartesian	-11.1833	11.1506	8.0000
372	GLOBAL	Cartesian	-12.3016	12.2656	8.0000
373	GLOBAL	Cartesian	-13.4200	13.3807	8.0000
374	GLOBAL	Cartesian	-14.5383	14.4957	8.0000
375	GLOBAL	Cartesian	-15.6566	15.6108	8.0000
376	GLOBAL	Cartesian	-16.7750	16.7258	8.0000
377	GLOBAL	Cartesian	-17.8933	17.8409	8.0000
378	GLOBAL	Cartesian	-19.0116	18.9559	8.0000
379	GLOBAL	Cartesian	-20.1299	20.0710	8.0000
380	GLOBAL	Cartesian	-21.2483	21.1860	8.0000
381	GLOBAL	Cartesian	0.0000	29.8989	8.0000
382	GLOBAL	Cartesian	0.0000	28.3253	8.0000
383	GLOBAL	Cartesian	0.0000	26.7516	8.0000
384	GLOBAL	Cartesian	0.0000	25.1780	8.0000
385	GLOBAL	Cartesian	0.0000	23.6044	8.0000
386	GLOBAL	Cartesian	0.0000	22.0308	8.0000
387	GLOBAL	Cartesian	0.0000	20.4571	8.0000
388	GLOBAL	Cartesian	0.0000	18.8835	8.0000
389	GLOBAL	Cartesian	0.0000	17.3099	8.0000
390	GLOBAL	Cartesian	0.0000	15.7363	8.0000
391	GLOBAL	Cartesian	0.0000	14.1626	8.0000
392	GLOBAL	Cartesian	0.0000	12.5890	8.0000
393	GLOBAL	Cartesian	0.0000	11.0154	8.0000
394	GLOBAL	Cartesian	0.0000	9.4418	8.0000
395	GLOBAL	Cartesian	0.0000	7.8681	8.0000
396	GLOBAL	Cartesian	0.0000	6.2945	8.0000
397	GLOBAL	Cartesian	0.0000	4.7209	8.0000
398	GLOBAL	Cartesian	0.0000	3.1472	8.0000
399	GLOBAL	Cartesian	0.0000	1.5736	8.0000
400	GLOBAL	Cartesian	0.0000	-1.5736	8.0000
401	GLOBAL	Cartesian	0.0000	-3.1473	8.0000
402	GLOBAL	Cartesian	0.0000	-4.7209	8.0000
403	GLOBAL	Cartesian	0.0000	-6.2945	8.0000
404	GLOBAL	Cartesian	0.0000	-7.8681	8.0000
405	GLOBAL	Cartesian	0.0000	-9.4418	8.0000

Table 1: Joint Coordinates

Joint	CoordSys	CoordType	GlobalX ft	GlobalY ft	GlobalZ ft
406	GLOBAL	Cartesian	0.0000	-11.0154	8.0000
407	GLOBAL	Cartesian	0.0000	-12.5890	8.0000
408	GLOBAL	Cartesian	0.0000	-14.1626	8.0000
409	GLOBAL	Cartesian	0.0000	-15.7363	8.0000
410	GLOBAL	Cartesian	0.0000	-17.3099	8.0000
411	GLOBAL	Cartesian	0.0000	-18.8835	8.0000
412	GLOBAL	Cartesian	0.0000	-20.4571	8.0000
413	GLOBAL	Cartesian	0.0000	-22.0308	8.0000
414	GLOBAL	Cartesian	0.0000	-23.6044	8.0000
415	GLOBAL	Cartesian	0.0000	-25.1780	8.0000
416	GLOBAL	Cartesian	0.0000	-26.7516	8.0000
417	GLOBAL	Cartesian	0.0000	-28.3253	8.0000
418	GLOBAL	Cartesian	0.0000	-29.8989	8.0000

8-6-1-2 Joint restraints

Table 2: Joint Restraint Assignments

Table 2: Joint Restraint Assignments

Joint	U1	U2	U3	R1	R2	R3
9	Yes	Yes	No	No	No	No
10	Yes	Yes	No	No	No	No
11	Yes	Yes	No	No	No	No
12	Yes	Yes	No	No	No	No
13	Yes	Yes	No	No	No	No
14	Yes	Yes	No	No	No	No
15	Yes	Yes	No	No	No	No
16	Yes	Yes	No	No	No	No
17	Yes	Yes	No	No	No	No
18	Yes	Yes	No	No	No	No
19	Yes	Yes	No	No	No	No
20	Yes	Yes	No	No	No	No
21	Yes	Yes	No	No	No	No
22	Yes	Yes	No	No	No	No
30	Yes	Yes	No	No	No	No
31	Yes	Yes	No	No	No	No
32	Yes	Yes	No	No	No	No

Table 2: Joint Restraint Assignments

Joint	U1	U2	U3	R1	R2	R3
33	Yes	Yes	No	No	No	No
34	Yes	Yes	No	No	No	No
45	Yes	Yes	No	No	No	No
46	Yes	Yes	No	No	No	No
47	Yes	Yes	No	No	No	No
48	Yes	Yes	No	No	No	No
49	Yes	Yes	No	No	No	No
50	Yes	Yes	No	No	No	No
51	Yes	Yes	No	No	No	No
52	Yes	Yes	No	No	No	No
53	Yes	Yes	No	No	No	No
54	Yes	Yes	No	No	No	No
55	Yes	Yes	No	No	No	No
56	Yes	Yes	No	No	No	No
57	Yes	Yes	No	No	No	No
58	Yes	Yes	No	No	No	No
59	Yes	Yes	No	No	No	No
60	Yes	Yes	No	No	No	No
61	Yes	Yes	No	No	No	No
62	Yes	Yes	No	No	No	No
63	Yes	Yes	No	No	No	No
64	Yes	Yes	No	No	No	No
65	Yes	Yes	No	No	No	No
66	Yes	Yes	No	No	No	No
67	Yes	Yes	No	No	No	No
68	Yes	Yes	No	No	No	No
69	Yes	Yes	No	No	No	No
70	Yes	Yes	No	No	No	No
71	Yes	Yes	No	No	No	No
72	Yes	Yes	No	No	No	No
73	Yes	Yes	No	No	No	No
74	Yes	Yes	No	No	No	No
75	Yes	Yes	No	No	No	No
76	Yes	Yes	No	No	No	No
77	Yes	Yes	No	No	No	No
78	Yes	Yes	No	No	No	No
79	Yes	Yes	No	No	No	No
80	Yes	Yes	No	No	No	No
81	Yes	Yes	No	No	No	No
82	Yes	Yes	No	No	No	No
83	Yes	Yes	No	No	No	No
84	Yes	Yes	No	No	No	No

Table 2: Joint Restraint Assignments

Joint	U1	U2	U3	R1	R2	R3
85	Yes	Yes	No	No	No	No
86	Yes	Yes	No	No	No	No
87	Yes	Yes	No	No	No	No
88	Yes	Yes	No	No	No	No
89	Yes	Yes	No	No	No	No
90	Yes	Yes	No	No	No	No
91	Yes	Yes	No	No	No	No
92	Yes	Yes	No	No	No	No
93	Yes	Yes	No	No	No	No
94	Yes	Yes	No	No	No	No
95	Yes	Yes	No	No	No	No
96	Yes	Yes	No	No	No	No
97	Yes	Yes	No	No	No	No
98	Yes	Yes	No	No	No	No
99	Yes	Yes	No	No	No	No
C1	Yes	Yes	No	No	No	No
C2	Yes	Yes	No	No	No	No
C3	Yes	Yes	No	No	No	No
C4	Yes	Yes	No	No	No	No
C5	Yes	Yes	No	No	No	No
C6	Yes	Yes	No	No	No	No
C7	Yes	Yes	No	No	No	No
C8	Yes	Yes	No	No	No	No
100	Yes	Yes	No	No	No	No
101	Yes	Yes	No	No	No	No
102	Yes	Yes	No	No	No	No
103	Yes	Yes	No	No	No	No
104	Yes	Yes	No	No	No	No
105	Yes	Yes	No	No	No	No
106	Yes	Yes	No	No	No	No
107	Yes	Yes	No	No	No	No
108	Yes	Yes	No	No	No	No
109	Yes	Yes	No	No	No	No
110	Yes	Yes	No	No	No	No
111	Yes	Yes	No	No	No	No
112	Yes	Yes	No	No	No	No
113	Yes	Yes	No	No	No	No
114	Yes	Yes	No	No	No	No

8-6-1-3 Element connectivity

Table 3: Connectivity - Frame

Table 3: Connectivity - Frame

Frame	JointI	JointJ	Length ft
120	C6	115	1.7185
121	115	116	1.7185
122	116	117	1.7185
123	117	118	1.7185
124	118	119	1.7185
125	119	120	1.7185
126	120	121	1.7185
127	121	122	1.7185
128	122	123	1.7185
129	123	124	1.7185
130	124	125	1.7185
131	125	126	1.7185
132	126	127	1.7185
133	127	128	1.7185
134	128	129	1.7185
135	129	130	1.7185
136	130	131	1.7185
137	131	132	1.7185
138	132	133	1.7185
139	133	17	1.7185
140	17	134	1.7185
141	134	135	1.7185
142	135	136	1.7185
143	136	137	1.7185
144	137	138	1.7185
145	138	139	1.7185
146	139	140	1.7185
147	140	141	1.7185
148	141	142	1.7185
149	142	143	1.7185
150	143	144	1.7185
151	144	145	1.7185
152	145	146	1.7185
153	146	147	1.7185
154	147	148	1.7185
155	148	149	1.7185
156	149	150	1.7185
157	150	151	1.7185

Table 3: Connectivity - Frame

Frame	JointI	JointJ	Length ft
158	151	152	1.7185
159	152	C2	1.7185
160	C5	153	1.7185
161	153	154	1.7185
162	154	155	1.7185
163	155	156	1.7185
164	156	157	1.7185
165	157	158	1.7185
166	158	159	1.7185
167	159	160	1.7185
168	160	161	1.7185
169	161	162	1.7185
170	162	163	1.7185
171	163	164	1.7185
172	164	165	1.7185
173	165	166	1.7185
174	166	167	1.7185
175	167	168	1.7185
176	168	169	1.7185
177	169	170	1.7185
178	170	171	1.7185
179	171	17	1.7185
180	17	172	1.7185
181	172	173	1.7185
182	173	174	1.7185
183	174	175	1.7185
184	175	176	1.7185
185	176	177	1.7185
186	177	178	1.7185
187	178	179	1.7185
188	179	180	1.7185
189	180	181	1.7185
190	181	182	1.7185
191	182	183	1.7185
192	183	184	1.7185
193	184	185	1.7185
194	185	186	1.7185
195	186	187	1.7185
196	187	188	1.7185
197	188	189	1.7185
198	189	190	1.7185
199	190	C1	1.7185

Table 3: Connectivity - Frame

Frame	JointI	JointJ	Length ft
200	C7	191	1.6797
201	191	192	1.6797
202	192	193	1.6797
203	193	194	1.6797
204	194	195	1.6797
205	195	196	1.6797
206	196	197	1.6797
207	197	198	1.6797
208	198	199	1.6797
209	199	200	1.6797
210	200	201	1.6797
211	201	202	1.6797
212	202	203	1.6797
213	203	204	1.6797
214	204	205	1.6797
215	205	206	1.6797
216	206	207	1.6797
217	207	208	1.6797
218	208	209	1.6797
219	209	17	1.6797
220	17	210	1.6797
221	210	211	1.6797
222	211	212	1.6797
223	212	213	1.6797
224	213	214	1.6797
225	214	215	1.6797
226	215	216	1.6797
227	216	217	1.6797
228	217	218	1.6797
229	218	219	1.6797
230	219	220	1.6797
231	220	221	1.6797
232	221	222	1.6797
233	222	223	1.6797
234	223	224	1.6797
235	224	225	1.6797
236	225	226	1.6797
237	226	227	1.6797
238	227	228	1.6797
239	228	C3	1.6797
240	C8	229	1.6797
241	229	230	1.6797

Table 3: Connectivity - Frame

Frame	JointI	JointJ	Length ft
242	230	231	1.6797
243	231	232	1.6797
244	232	233	1.6797
245	233	234	1.6797
246	234	235	1.6797
247	235	236	1.6797
248	236	237	1.6797
249	237	238	1.6797
250	238	239	1.6797
251	239	240	1.6797
252	240	241	1.6797
253	241	242	1.6797
254	242	243	1.6797
255	243	244	1.6797
256	244	245	1.6797
257	245	246	1.6797
258	246	247	1.6797
259	247	17	1.6797
260	17	248	1.6797
261	248	249	1.6797
262	249	250	1.6797
263	250	251	1.6797
264	251	252	1.6797
265	252	253	1.6797
266	253	254	1.6797
267	254	255	1.6797
268	255	256	1.6797
269	256	257	1.6797
270	257	258	1.6797
271	258	259	1.6797
272	259	260	1.6797
273	260	261	1.6797
274	261	262	1.6797
275	262	263	1.6797
276	263	264	1.6797
277	264	265	1.6797
278	265	266	1.6797
279	266	C4	1.6797
280	11	267	1.5792
281	267	268	1.5792
282	268	269	1.5792
283	269	270	1.5792

Table 3: Connectivity - Frame

Frame	JointI	JointJ	Length ft
284	270	271	1.5792
285	271	272	1.5792
286	272	273	1.5792
287	273	274	1.5792
288	274	275	1.5792
289	275	276	1.5792
290	276	277	1.5792
291	277	278	1.5792
292	278	279	1.5792
293	279	280	1.5792
294	280	281	1.5792
295	281	282	1.5792
296	282	283	1.5792
297	283	284	1.5792
298	284	285	1.5792
299	285	17	1.5792
300	17	286	1.5792
301	286	287	1.5792
302	287	288	1.5792
303	288	289	1.5792
304	289	290	1.5792
305	290	291	1.5792
306	291	292	1.5792
307	292	293	1.5792
308	293	294	1.5792
309	294	295	1.5792
310	295	296	1.5792
311	296	297	1.5792
312	297	298	1.5792
313	298	299	1.5792
314	299	300	1.5792
315	300	301	1.5792
316	301	302	1.5792
317	302	303	1.5792
318	303	304	1.5792
319	304	16	1.5792
320	12	305	1.5460
321	305	306	1.5460
322	306	307	1.5460
323	307	308	1.5460
324	308	309	1.5460
325	309	310	1.5460

Table 3: Connectivity - Frame

Frame	JointI	JointJ	Length ft
326	310	311	1.5460
327	311	312	1.5460
328	312	313	1.5460
329	313	314	1.5460
330	314	315	1.5460
331	315	316	1.5460
332	316	317	1.5460
333	317	318	1.5460
334	318	319	1.5460
335	319	320	1.5460
336	320	321	1.5460
337	321	322	1.5460
338	322	323	1.5460
339	323	17	1.5460
340	17	324	1.5460
341	324	325	1.5460
342	325	326	1.5460
343	326	327	1.5460
344	327	328	1.5460
345	328	329	1.5460
346	329	330	1.5460
347	330	331	1.5460
348	331	332	1.5460
349	332	333	1.5460
350	333	334	1.5460
351	334	335	1.5460
352	335	336	1.5460
353	336	337	1.5460
354	337	338	1.5460
355	338	339	1.5460
356	339	340	1.5460
357	340	341	1.5460
358	341	342	1.5460
359	342	15	1.5460
360	13	343	1.5792
361	343	344	1.5792
362	344	345	1.5792
363	345	346	1.5792
364	346	347	1.5792
365	347	348	1.5792
366	348	349	1.5792
367	349	350	1.5792

Table 3: Connectivity - Frame

Frame	JointI	JointJ	Length ft
368	350	351	1.5792
369	351	352	1.5792
370	352	353	1.5792
371	353	354	1.5792
372	354	355	1.5792
373	355	356	1.5792
374	356	357	1.5792
375	357	358	1.5792
376	358	359	1.5792
377	359	360	1.5792
378	360	361	1.5792
379	361	17	1.5792
380	17	362	1.5792
381	362	363	1.5792
382	363	364	1.5792
383	364	365	1.5792
384	365	366	1.5792
385	366	367	1.5792
386	367	368	1.5792
387	368	369	1.5792
388	369	370	1.5792
389	370	371	1.5792
390	371	372	1.5792
391	372	373	1.5792
392	373	374	1.5792
393	374	375	1.5792
394	375	376	1.5792
395	376	377	1.5792
396	377	378	1.5792
397	378	379	1.5792
398	379	380	1.5792
399	380	9	1.5792
400	10	381	1.5736
401	381	382	1.5736
402	382	383	1.5736
403	383	384	1.5736
404	384	385	1.5736
405	385	386	1.5736
406	386	387	1.5736
407	387	388	1.5736
408	388	389	1.5736
409	389	390	1.5736

Table 3: Connectivity - Frame

Frame	JointI	JointJ	Length ft
410	390	391	1.5736
411	391	392	1.5736
412	392	393	1.5736
413	393	394	1.5736
414	394	395	1.5736
415	395	396	1.5736
416	396	397	1.5736
417	397	398	1.5736
418	398	399	1.5736
419	399	17	1.5736
420	17	400	1.5736
421	400	401	1.5736
422	401	402	1.5736
423	402	403	1.5736
424	403	404	1.5736
425	404	405	1.5736
426	405	406	1.5736
427	406	407	1.5736
428	407	408	1.5736
429	408	409	1.5736
430	409	410	1.5736
431	410	411	1.5736
432	411	412	1.5736
433	412	413	1.5736
434	413	414	1.5736
435	414	415	1.5736
436	415	416	1.5736
437	416	417	1.5736
438	417	418	1.5736
439	418	14	1.5736
C1-C2	C1	C2	27.6246
C2-C3	C2	C3	25.0831
C3-C4	C3	C4	26.2594
C4-C5	C4	C5	25.0831
C5-C6	C5	C6	27.6246
C6-C7	C6	C7	25.0831
C7-C8	C7	C8	26.2594
C8-C1	C8	C1	25.0831

Table 4: Frame Section Assignments

Note: “MatProp” item in Table 4 is either Default, or the name of a Material. Default means that the material property for the frame object is taken from the material property designated for the frame section that is assigned to the frame object.

Table 4: Frame Section Assignments

Frame	AnalSect	DesignSect	MatProp
120	Inter. Beams	Inter. Beams	Default
121	Inter. Beams	Inter. Beams	Default
122	Inter. Beams	Inter. Beams	Default
123	Inter. Beams	Inter. Beams	Default
124	Inter. Beams	Inter. Beams	Default
125	Inter. Beams	Inter. Beams	Default
126	Inter. Beams	Inter. Beams	Default
127	Inter. Beams	Inter. Beams	Default
128	Inter. Beams	Inter. Beams	Default
129	Inter. Beams	Inter. Beams	Default
130	Inter. Beams	Inter. Beams	Default
131	Inter. Beams	Inter. Beams	Default
132	Inter. Beams	Inter. Beams	Default
133	Inter. Beams	Inter. Beams	Default
134	Inter. Beams	Inter. Beams	Default
135	Inter. Beams	Inter. Beams	Default
136	Inter. Beams	Inter. Beams	Default
137	Inter. Beams	Inter. Beams	Default
138	Inter. Beams	Inter. Beams	Default
139	Inter. Beams	Inter. Beams	Default
140	Inter. Beams	Inter. Beams	Default
141	Inter. Beams	Inter. Beams	Default
142	Inter. Beams	Inter. Beams	Default
143	Inter. Beams	Inter. Beams	Default
144	Inter. Beams	Inter. Beams	Default
145	Inter. Beams	Inter. Beams	Default
146	Inter. Beams	Inter. Beams	Default
147	Inter. Beams	Inter. Beams	Default
148	Inter. Beams	Inter. Beams	Default
149	Inter. Beams	Inter. Beams	Default
150	Inter. Beams	Inter. Beams	Default
151	Inter. Beams	Inter. Beams	Default
152	Inter. Beams	Inter. Beams	Default
153	Inter. Beams	Inter. Beams	Default
154	Inter. Beams	Inter. Beams	Default
155	Inter. Beams	Inter. Beams	Default

Table 4: Frame Section Assignments

Frame	AnalSect	DesignSect	MatProp
156	Inter. Beams	Inter. Beams	Default
157	Inter. Beams	Inter. Beams	Default
158	Inter. Beams	Inter. Beams	Default
159	Inter. Beams	Inter. Beams	Default
160	Inter. Beams	Inter. Beams	Default
161	Inter. Beams	Inter. Beams	Default
162	Inter. Beams	Inter. Beams	Default
163	Inter. Beams	Inter. Beams	Default
164	Inter. Beams	Inter. Beams	Default
165	Inter. Beams	Inter. Beams	Default
166	Inter. Beams	Inter. Beams	Default
167	Inter. Beams	Inter. Beams	Default
168	Inter. Beams	Inter. Beams	Default
169	Inter. Beams	Inter. Beams	Default
170	Inter. Beams	Inter. Beams	Default
171	Inter. Beams	Inter. Beams	Default
172	Inter. Beams	Inter. Beams	Default
173	Inter. Beams	Inter. Beams	Default
174	Inter. Beams	Inter. Beams	Default
175	Inter. Beams	Inter. Beams	Default
176	Inter. Beams	Inter. Beams	Default
177	Inter. Beams	Inter. Beams	Default
178	Inter. Beams	Inter. Beams	Default
179	Inter. Beams	Inter. Beams	Default
180	Inter. Beams	Inter. Beams	Default
181	Inter. Beams	Inter. Beams	Default
182	Inter. Beams	Inter. Beams	Default
183	Inter. Beams	Inter. Beams	Default
184	Inter. Beams	Inter. Beams	Default
185	Inter. Beams	Inter. Beams	Default
186	Inter. Beams	Inter. Beams	Default
187	Inter. Beams	Inter. Beams	Default
188	Inter. Beams	Inter. Beams	Default
189	Inter. Beams	Inter. Beams	Default
190	Inter. Beams	Inter. Beams	Default
191	Inter. Beams	Inter. Beams	Default
192	Inter. Beams	Inter. Beams	Default
193	Inter. Beams	Inter. Beams	Default
194	Inter. Beams	Inter. Beams	Default
195	Inter. Beams	Inter. Beams	Default
196	Inter. Beams	Inter. Beams	Default
197	Inter. Beams	Inter. Beams	Default

Table 4: Frame Section Assignments

Frame	AnalSect	DesignSect	MatProp
198	Inter. Beams	Inter. Beams	Default
199	Inter. Beams	Inter. Beams	Default
200	Inter. Beams	Inter. Beams	Default
201	Inter. Beams	Inter. Beams	Default
202	Inter. Beams	Inter. Beams	Default
203	Inter. Beams	Inter. Beams	Default
204	Inter. Beams	Inter. Beams	Default
205	Inter. Beams	Inter. Beams	Default
206	Inter. Beams	Inter. Beams	Default
207	Inter. Beams	Inter. Beams	Default
208	Inter. Beams	Inter. Beams	Default
209	Inter. Beams	Inter. Beams	Default
210	Inter. Beams	Inter. Beams	Default
211	Inter. Beams	Inter. Beams	Default
212	Inter. Beams	Inter. Beams	Default
213	Inter. Beams	Inter. Beams	Default
214	Inter. Beams	Inter. Beams	Default
215	Inter. Beams	Inter. Beams	Default
216	Inter. Beams	Inter. Beams	Default
217	Inter. Beams	Inter. Beams	Default
218	Inter. Beams	Inter. Beams	Default
219	Inter. Beams	Inter. Beams	Default
220	Inter. Beams	Inter. Beams	Default
221	Inter. Beams	Inter. Beams	Default
222	Inter. Beams	Inter. Beams	Default
223	Inter. Beams	Inter. Beams	Default
224	Inter. Beams	Inter. Beams	Default
225	Inter. Beams	Inter. Beams	Default
226	Inter. Beams	Inter. Beams	Default
227	Inter. Beams	Inter. Beams	Default
228	Inter. Beams	Inter. Beams	Default
229	Inter. Beams	Inter. Beams	Default
230	Inter. Beams	Inter. Beams	Default
231	Inter. Beams	Inter. Beams	Default
232	Inter. Beams	Inter. Beams	Default
233	Inter. Beams	Inter. Beams	Default
234	Inter. Beams	Inter. Beams	Default
235	Inter. Beams	Inter. Beams	Default
236	Inter. Beams	Inter. Beams	Default
237	Inter. Beams	Inter. Beams	Default
238	Inter. Beams	Inter. Beams	Default
239	Inter. Beams	Inter. Beams	Default

Table 4: Frame Section Assignments

Frame	AnalSect	DesignSect	MatProp
240	Inter. Beams	Inter. Beams	Default
241	Inter. Beams	Inter. Beams	Default
242	Inter. Beams	Inter. Beams	Default
243	Inter. Beams	Inter. Beams	Default
244	Inter. Beams	Inter. Beams	Default
245	Inter. Beams	Inter. Beams	Default
246	Inter. Beams	Inter. Beams	Default
247	Inter. Beams	Inter. Beams	Default
248	Inter. Beams	Inter. Beams	Default
249	Inter. Beams	Inter. Beams	Default
250	Inter. Beams	Inter. Beams	Default
251	Inter. Beams	Inter. Beams	Default
252	Inter. Beams	Inter. Beams	Default
253	Inter. Beams	Inter. Beams	Default
254	Inter. Beams	Inter. Beams	Default
255	Inter. Beams	Inter. Beams	Default
256	Inter. Beams	Inter. Beams	Default
257	Inter. Beams	Inter. Beams	Default
258	Inter. Beams	Inter. Beams	Default
259	Inter. Beams	Inter. Beams	Default
260	Inter. Beams	Inter. Beams	Default
261	Inter. Beams	Inter. Beams	Default
262	Inter. Beams	Inter. Beams	Default
263	Inter. Beams	Inter. Beams	Default
264	Inter. Beams	Inter. Beams	Default
265	Inter. Beams	Inter. Beams	Default
266	Inter. Beams	Inter. Beams	Default
267	Inter. Beams	Inter. Beams	Default
268	Inter. Beams	Inter. Beams	Default
269	Inter. Beams	Inter. Beams	Default
270	Inter. Beams	Inter. Beams	Default
271	Inter. Beams	Inter. Beams	Default
272	Inter. Beams	Inter. Beams	Default
273	Inter. Beams	Inter. Beams	Default
274	Inter. Beams	Inter. Beams	Default
275	Inter. Beams	Inter. Beams	Default
276	Inter. Beams	Inter. Beams	Default
277	Inter. Beams	Inter. Beams	Default
278	Inter. Beams	Inter. Beams	Default
279	Inter. Beams	Inter. Beams	Default
280	Inter. Beams	Inter. Beams	Default
281	Inter. Beams	Inter. Beams	Default

Table 4: Frame Section Assignments

Frame	AnalSect	DesignSect	MatProp
282	Inter. Beams	Inter. Beams	Default
283	Inter. Beams	Inter. Beams	Default
284	Inter. Beams	Inter. Beams	Default
285	Inter. Beams	Inter. Beams	Default
286	Inter. Beams	Inter. Beams	Default
287	Inter. Beams	Inter. Beams	Default
288	Inter. Beams	Inter. Beams	Default
289	Inter. Beams	Inter. Beams	Default
290	Inter. Beams	Inter. Beams	Default
291	Inter. Beams	Inter. Beams	Default
292	Inter. Beams	Inter. Beams	Default
293	Inter. Beams	Inter. Beams	Default
294	Inter. Beams	Inter. Beams	Default
295	Inter. Beams	Inter. Beams	Default
296	Inter. Beams	Inter. Beams	Default
297	Inter. Beams	Inter. Beams	Default
298	Inter. Beams	Inter. Beams	Default
299	Inter. Beams	Inter. Beams	Default
300	Inter. Beams	Inter. Beams	Default
301	Inter. Beams	Inter. Beams	Default
302	Inter. Beams	Inter. Beams	Default
303	Inter. Beams	Inter. Beams	Default
304	Inter. Beams	Inter. Beams	Default
305	Inter. Beams	Inter. Beams	Default
306	Inter. Beams	Inter. Beams	Default
307	Inter. Beams	Inter. Beams	Default
308	Inter. Beams	Inter. Beams	Default
309	Inter. Beams	Inter. Beams	Default
310	Inter. Beams	Inter. Beams	Default
311	Inter. Beams	Inter. Beams	Default
312	Inter. Beams	Inter. Beams	Default
313	Inter. Beams	Inter. Beams	Default
314	Inter. Beams	Inter. Beams	Default
315	Inter. Beams	Inter. Beams	Default
316	Inter. Beams	Inter. Beams	Default
317	Inter. Beams	Inter. Beams	Default
318	Inter. Beams	Inter. Beams	Default
319	Inter. Beams	Inter. Beams	Default
320	Inter. Beams	Inter. Beams	Default
321	Inter. Beams	Inter. Beams	Default
322	Inter. Beams	Inter. Beams	Default
323	Inter. Beams	Inter. Beams	Default

Table 4: Frame Section Assignments

Frame	AnalSect	DesignSect	MatProp
324	Inter. Beams	Inter. Beams	Default
325	Inter. Beams	Inter. Beams	Default
326	Inter. Beams	Inter. Beams	Default
327	Inter. Beams	Inter. Beams	Default
328	Inter. Beams	Inter. Beams	Default
329	Inter. Beams	Inter. Beams	Default
330	Inter. Beams	Inter. Beams	Default
331	Inter. Beams	Inter. Beams	Default
332	Inter. Beams	Inter. Beams	Default
333	Inter. Beams	Inter. Beams	Default
334	Inter. Beams	Inter. Beams	Default
335	Inter. Beams	Inter. Beams	Default
336	Inter. Beams	Inter. Beams	Default
337	Inter. Beams	Inter. Beams	Default
338	Inter. Beams	Inter. Beams	Default
339	Inter. Beams	Inter. Beams	Default
340	Inter. Beams	Inter. Beams	Default
341	Inter. Beams	Inter. Beams	Default
342	Inter. Beams	Inter. Beams	Default
343	Inter. Beams	Inter. Beams	Default
344	Inter. Beams	Inter. Beams	Default
345	Inter. Beams	Inter. Beams	Default
346	Inter. Beams	Inter. Beams	Default
347	Inter. Beams	Inter. Beams	Default
348	Inter. Beams	Inter. Beams	Default
349	Inter. Beams	Inter. Beams	Default
350	Inter. Beams	Inter. Beams	Default
351	Inter. Beams	Inter. Beams	Default
352	Inter. Beams	Inter. Beams	Default
353	Inter. Beams	Inter. Beams	Default
354	Inter. Beams	Inter. Beams	Default
355	Inter. Beams	Inter. Beams	Default
356	Inter. Beams	Inter. Beams	Default
357	Inter. Beams	Inter. Beams	Default
358	Inter. Beams	Inter. Beams	Default
359	Inter. Beams	Inter. Beams	Default
360	Inter. Beams	Inter. Beams	Default
361	Inter. Beams	Inter. Beams	Default
362	Inter. Beams	Inter. Beams	Default
363	Inter. Beams	Inter. Beams	Default
364	Inter. Beams	Inter. Beams	Default
365	Inter. Beams	Inter. Beams	Default

Table 4: Frame Section Assignments

Frame	AnalSect	DesignSect	MatProp
366	Inter. Beams	Inter. Beams	Default
367	Inter. Beams	Inter. Beams	Default
368	Inter. Beams	Inter. Beams	Default
369	Inter. Beams	Inter. Beams	Default
370	Inter. Beams	Inter. Beams	Default
371	Inter. Beams	Inter. Beams	Default
372	Inter. Beams	Inter. Beams	Default
373	Inter. Beams	Inter. Beams	Default
374	Inter. Beams	Inter. Beams	Default
375	Inter. Beams	Inter. Beams	Default
376	Inter. Beams	Inter. Beams	Default
377	Inter. Beams	Inter. Beams	Default
378	Inter. Beams	Inter. Beams	Default
379	Inter. Beams	Inter. Beams	Default
380	Inter. Beams	Inter. Beams	Default
381	Inter. Beams	Inter. Beams	Default
382	Inter. Beams	Inter. Beams	Default
383	Inter. Beams	Inter. Beams	Default
384	Inter. Beams	Inter. Beams	Default
385	Inter. Beams	Inter. Beams	Default
386	Inter. Beams	Inter. Beams	Default
387	Inter. Beams	Inter. Beams	Default
388	Inter. Beams	Inter. Beams	Default
389	Inter. Beams	Inter. Beams	Default
390	Inter. Beams	Inter. Beams	Default
391	Inter. Beams	Inter. Beams	Default
392	Inter. Beams	Inter. Beams	Default
393	Inter. Beams	Inter. Beams	Default
394	Inter. Beams	Inter. Beams	Default
395	Inter. Beams	Inter. Beams	Default
396	Inter. Beams	Inter. Beams	Default
397	Inter. Beams	Inter. Beams	Default
398	Inter. Beams	Inter. Beams	Default
399	Inter. Beams	Inter. Beams	Default
400	Inter. Beams	Inter. Beams	Default
401	Inter. Beams	Inter. Beams	Default
402	Inter. Beams	Inter. Beams	Default
403	Inter. Beams	Inter. Beams	Default
404	Inter. Beams	Inter. Beams	Default
405	Inter. Beams	Inter. Beams	Default
406	Inter. Beams	Inter. Beams	Default
407	Inter. Beams	Inter. Beams	Default

Table 4: Frame Section Assignments

Frame	AnalSect	DesignSect	MatProp
408	Inter. Beams	Inter. Beams	Default
409	Inter. Beams	Inter. Beams	Default
410	Inter. Beams	Inter. Beams	Default
411	Inter. Beams	Inter. Beams	Default
412	Inter. Beams	Inter. Beams	Default
413	Inter. Beams	Inter. Beams	Default
414	Inter. Beams	Inter. Beams	Default
415	Inter. Beams	Inter. Beams	Default
416	Inter. Beams	Inter. Beams	Default
417	Inter. Beams	Inter. Beams	Default
418	Inter. Beams	Inter. Beams	Default
419	Inter. Beams	Inter. Beams	Default
420	Inter. Beams	Inter. Beams	Default
421	Inter. Beams	Inter. Beams	Default
422	Inter. Beams	Inter. Beams	Default
423	Inter. Beams	Inter. Beams	Default
424	Inter. Beams	Inter. Beams	Default
425	Inter. Beams	Inter. Beams	Default
426	Inter. Beams	Inter. Beams	Default
427	Inter. Beams	Inter. Beams	Default
428	Inter. Beams	Inter. Beams	Default
429	Inter. Beams	Inter. Beams	Default
430	Inter. Beams	Inter. Beams	Default
431	Inter. Beams	Inter. Beams	Default
432	Inter. Beams	Inter. Beams	Default
433	Inter. Beams	Inter. Beams	Default
434	Inter. Beams	Inter. Beams	Default
435	Inter. Beams	Inter. Beams	Default
436	Inter. Beams	Inter. Beams	Default
437	Inter. Beams	Inter. Beams	Default
438	Inter. Beams	Inter. Beams	Default
439	Inter. Beams	Inter. Beams	Default
C1-C2	Capping Beam	N.A.	Default
C2-C3	Capping Beam	N.A.	Default
C3-C4	Capping Beam	N.A.	Default
C4-C5	Capping Beam	N.A.	Default
C5-C6	Capping Beam	N.A.	Default
C6-C7	Capping Beam	N.A.	Default
C7-C8	Capping Beam	N.A.	Default
C8-C1	Capping Beam	N.A.	Default

8-6-2 Material properties

This section provides material property information for materials used in the model.

Table 5: Material Properties 02 - Basic Mechanical Properties

Table 5: Material Properties 02 - Basic Mechanical Properties

Material	UnitWeight Kip/ft3	UnitMass Kip-s2/ft4	E1 Kip/ft2	G12 Kip/ft2	U12	A1 1/F
3000Psi	1.5000E-01	4.6621E-03	449570.68	187321.12	0.200000	5.5000E-06
4000Psi	1.5000E-01	4.6621E-03	519119.50	216299.79	0.200000	5.5000E-06
A615Gr60	4.9000E-01	1.5230E-02	4176000.00			6.5000E-06
A992Fy50	4.9000E-01	1.5230E-02	4176000.00	1606153.85	0.300000	6.5000E-06
Timber	3.4320E-02	1.0667E-03	113760.00	43753.85	0.300000	6.5000E-06

Table 6: Material Properties 03a - Steel Data

Table 6: Material Properties 03a - Steel Data

Material	Fy Kip/ft2	Fu Kip/ft2	FinalSlope
A992Fy50	7200.00	9360.00	-0.100000

Table 7: Material Properties 03b - Concrete Data

Table 7: Material Properties 03b - Concrete Data

Material	Fc Kip/ft2	FinalSlope
3000Psi	432.00	-0.100000
4000Psi	576.00	-0.100000

Table 8: Material Properties 03e - Rebar Data

Table 8: Material Properties 03e - Rebar Data

Material	Fy Kip/ft2	Fu Kip/ft2	FinalSlope
A615Gr60	8640.00	12960.00	-0.100000

8-6-2-1 Section properties

This section provides section property information for objects used in the model.

8-6-2-1-1 Frames

Table 9: Frame Section Properties 01 - General, Part 1 of 4

Table 9: Frame Section Properties 01 - General, Part 1 of 4

SectionName	Material	Shape	t3 ft	t2 ft	Area ft2	TorsConst ft4	I33 ft4	I22 ft4
Capping Beam	3000Psi	SD Section			96.030	1223.2870	714.00529	906.04
Inter. Beams	3000Psi	Rectangular	2.00000	2.00000	4.0000	2.253333	1.333333	1.3333

Table 9: Frame Section Properties 01 - General, Part 2 of 4

Table 9: Frame Section Properties 01 - General, Part 2 of 4

SectionName	AS2 ft2	AS3 ft2
Capping Beam	64.2535	82.0332
Inter. Beams	3.3333	3.3333

Table 9: Frame Section Properties 01 - General, Part 3 of 4

Table 9: Frame Section Properties 01 - General, Part 3 of 4

SectionName	S33 ft3	S22 ft3	Z33 ft3	Z22 ft3	R33 ft	R22 ft
Capping Beam	130.129830	131.310587	224.059023	249.969000	2.72676	3.07164
Inter. Beams	1.333333	1.333333	2.000000	2.000000	0.57735	0.57735

Table 9: Frame Section Properties 01 - General, Part 4 of 4

Table 9: Frame Section Properties 01 - General, Part 4 of 4

SectionName	AMod	A2Mod	A3Mod	JMod	I2Mod	I3Mod	MMod	WMod
Capping Beam	1.000000	1.000000	1.000000	1.000000	1.000000	1.000000	1.000000	1.00000
Inter. Beams	1.000000	2.000000	2.000000	2.000000	2.000000	2.000000	1.000000	1.00000

Table 10: Frame Section Properties 02 - Concrete Column, Part 1 of 2

Table 10: Frame Section Properties 02 - Concrete Column, Part 1 of 2

SectionName	RebarMatL	RebarMatC	ReinfConfig	LatReinf	Cover	NumBars 3Dir	NumBars 2Dir
					ft		
Inter. Beams	A615Gr60	A615Gr60	Rectangular	Ties	0.125	3	3

Table 10: Frame Section Properties 02 - Concrete Column, Part 2 of 2

Table 10: Frame Section Properties 02 - Concrete Column, Part 2 of 2

SectionName	BarSizeL	BarSizeC	SpacingC	NumCBars 2	NumCBars 3
			ft		
Inter. Beams	#9	#4	0.50000	3	3

8-6-2-1-2 Areas

Table 11: Area Section Properties, Part 1 of 3

Table 11: Area Section Properties, Part 1 of 3

Section	Material	AreaType	Type	DrillDOF	Thickness	BendThick	F11Mod
					ft	ft	
2' THK Slab	3000Psi	Shell	Shell-Thick	Yes	2.00000	2.00000	1.000000
8' FOUNDATION	3000Psi	Shell	Shell-Thick	Yes	8.00000	8.00000	1.000000

Table 11: Area Section Properties, Part 2 of 3

Table 11: Area Section Properties, Part 2 of 3

Section	F22 Mod	F12 Mod	M11 Mod	M22 Mod	M12 Mod	V13 Mod	V23 Mod	M Mod
2' THK Slab	1.00	1.00	1.00	1.00	1.00	1.00	1.00	1.00
8' FOUNDATION	1.00	1.00	1.00	1.00	1.00	1.00	1.00	1.00

Table 11: Area Section Properties, Part 3 of 3

Table 11: Area Section Properties, Part 3 of 3

Section	WMod
2' THK Slab	1.000000
8' FOUNDATION	1.000000

8-6-2-1-3 Solids

Table 12: Solid Property Definitions

Table 12: Solid Property Definitions

SolidProp	Material	MatAngleA Degrees	MatAngleB Degrees	MatAngleC Degrees
2' thk slab	3000Psi	0.000	0.000	0.000
6' Trapz Foundation	3000Psi	0.000	0.000	0.000

8-6-3 Load patterns

This section provides loading information as applied to the model.

8-6-3-1 Definitions

Table 13: Load Pattern Definitions

Table 13: Load Pattern Definitions

LoadPat	DesignType	SelfWtMult	AutoLoad
DEAD	DEAD	1.000000	
DL Crane	OTHER	0.000000	
WL Y	OTHER	0.000000	
WL X	OTHER	0.000000	
EL X	OTHER	0.000000	
EL Y	OTHER	0.000000	
EL Z	OTHER	0.000000	

8-6-4 Load cases

This section provides load case information.

8-6-4-1 Definitions

Table 14: Load Case Definitions

Table 14: Load Case Definitions

Case	Type	InitialCond	ModalCase	BaseCase	DesActOpt	DesignAct
DEAD	LinStatic	Zero			Prog Det	Non-Composite
MODAL	LinModal	Zero			Prog Det	Other
DL Crane	LinStatic	Zero			Prog Det	Other
WL +X	LinStatic	Zero			Prog Det	Other
WL +Y	LinStatic	Zero			Prog Det	Other
EL +X	LinStatic	Zero			Prog Det	Other
EL +Y	LinStatic	Zero			Prog Det	Other
WL -X	LinStatic	Zero			Prog Det	Other
WL -Y	LinStatic	Zero			Prog Det	Other
EL -X	LinStatic	Zero			Prog Det	Other

Table 14: Load Case Definitions

Case	Type	InitialCond	ModalCase	BaseCase	DesActOpt	DesignAct
EL -Y	LinStatic	Zero			Prog Det	Other
EL Z	LinStatic	Zero			Prog Det	Other

8-6-4-2 Static case load assignments

Table 15: Case - Static 1 - Load Assignments

Table 15: Case - Static 1 - Load Assignments

Case	LoadType	LoadName	LoadSF
DEAD	Load pattern	DEAD	1.000000
DL Crane	Load pattern	DL Crane	1.000000
WL +X	Load pattern	WL X	1.000000
WL +Y	Load pattern	WL Y	1.000000
EL +X	Load pattern	EL X	1.000000
EL +Y	Load pattern	EL Y	1.000000
WL -X	Load pattern	WL X	-1.000000
WL -Y	Load pattern	WL Y	-1.000000
EL -X	Load pattern	EL X	-1.000000
EL -Y	Load pattern	EL Y	-1.000000
EL Z	Load pattern	EL Z	1.000000

8-6-4-3 Response spectrum case load assignments

Table 16: Function - Response Spectrum - User

Table 16: Function - Response Spectrum - User

Name	Period Sec	Accel	FuncDamp
UNIFRS	0.000000	1.000000	0.050000
UNIFRS	1.000000	1.000000	

8-6-5 Load combinations

This section provides load combination information.

Table 17: Combination Definitions

Table 17: Combination Definitions

ComboName	ComboType	CaseName	ScaleFactor
LC1	Linear Add	DEAD	1.400000
LC1		DL Crane	1.400000
LC2-1 +X Dir.	Linear Add	DEAD	1.200000
LC2-1 +X Dir.		DL Crane	1.200000
LC2-1 +X Dir.		WL +X	1.600000
LC2-2 +Y Dir.	Linear Add	DEAD	1.200000
LC2-2 +Y Dir.		DL Crane	1.200000
LC2-2 +Y Dir.		WL +Y	1.600000
LC3-1 +X Dir.	Linear Add	DEAD	1.200000
LC3-1 +X Dir.		DL Crane	1.200000
LC3-1 +X Dir.		EL +X	1.000000
LC3-1 +X Dir.		EL Z	1.000000
LC3-2 +Y Dir.	Linear Add	DEAD	1.200000
LC3-2 +Y Dir.		DL Crane	1.200000
LC3-2 +Y Dir.		EL +Y	1.000000
LC3-2 +Y Dir.		EL Z	1.000000
LC4-1 +X Dir.	Linear Add	DEAD	0.900000
LC4-1 +X Dir.		DL Crane	0.900000
LC4-1 +X Dir.		WL +X	1.600000
LC4-2 +Y Dir.	Linear Add	DEAD	0.900000
LC4-2 +Y Dir.		DL Crane	0.900000
LC4-2 +Y Dir.		WL +Y	1.600000
LC5-1 +X Dir.	Linear Add	DEAD	0.900000
LC5-1 +X Dir.		DL Crane	0.900000
LC5-1 +X Dir.		EL +X	1.000000
LC5-1 +X Dir.		EL Z	-1.000000
LC5-2 +Y Dir.	Linear Add	DEAD	0.900000
LC5-2 +Y Dir.		DL Crane	0.900000
LC5-2 +Y Dir.		EL +Y	1.000000
LC5-2 +Y Dir.		EL Z	-1.000000
LC2-1 -X Dir.	Linear Add	DEAD	1.200000
LC2-1 -X Dir.		DL Crane	1.200000
LC2-1 -X Dir.		WL -X	1.600000
LC2-2 -Y Dir.	Linear Add	DEAD	1.200000
LC2-2 -Y Dir.		DL Crane	1.200000
LC2-2 -Y Dir.		WL -Y	1.600000
LC3-1 -X Dir.	Linear Add	DEAD	1.200000

Table 17: Combination Definitions

ComboName	ComboType	CaseName	ScaleFactor
LC3-1 -X Dir.		DL Crane	1.200000
LC3-1 -X Dir.		EL -X	1.000000
LC3-1 -X Dir.		EL Z	1.000000
LC3-2 -Y Dir.	Linear Add	DEAD	1.200000
LC3-2 -Y Dir.		DL Crane	1.200000
LC3-2 -Y Dir.		EL -Y	1.000000
LC3-2 -Y Dir.		EL Z	1.000000
LC4-1 -X Dir.	Linear Add	DEAD	0.900000
LC4-1 -X Dir.		DL Crane	0.900000
LC4-1 -X Dir.		WL -X	1.600000
LC4-2 -Y Dir.	Linear Add	DEAD	0.900000
LC4-2 -Y Dir.		DL Crane	0.900000
LC4-2 -Y Dir.		WL -Y	1.600000
LC5-1 -X Dir.	Linear Add	DEAD	0.900000
LC5-1 -X Dir.		DL Crane	0.900000
LC5-1 -X Dir.		EL -X	1.000000
LC5-1 -X Dir.		EL Z	-1.000000
LC5-2 -Y Dir.	Linear Add	DEAD	0.900000
LC5-2 -Y Dir.		DL Crane	0.900000
LC5-2 -Y Dir.		EL -Y	1.000000
LC5-2 -Y Dir.		EL Z	-1.000000

8-6-6 Material take-off

This section provides a material take-off.

Table 18: Material List 2 - By Section Property

Table 18: Material List 2 - By Section Property

Section	ObjectType	NumPieces	TotalLength ft	TotalWeight Kip
Capping Beam	Frame	8	208.1004	2997.583
Inter. Beams	Frame	320	522.9784	313.787
Edges	Link	88		0.000
Interm.	Link	306		0.000

8-6-7 Design preferences

This section provides the design preferences for each type of design, which typically include material reduction factors, framing type, stress ratio limit, deflection limits, and other code specific items.

8-6-7-1 Steel design

Table 19: Preferences - Steel Design - AISC360-05-IBC2006, Part 1 of 3

Table 19: Preferences - Steel Design - AISC360-05-IBC2006, Part 1 of 3

FrameType	PatLLF	SRatio Limit	SDC	ImpFactor	SystemRho	SystemSds	SystemR	SystemCd
SMF	0.75000	0.9500	D	1.000000	1.000000	0.500000	8.000000	5.500000

Table 19: Preferences - Steel Design - AISC360-05-IBC2006, Part 2 of 3

Table 19: Preferences - Steel Design - AISC360-05-IBC2006, Part 2 of 3

Omega0	NLCoeff	PhiB	PhiC	PhiTY	PhiTF	PhiV	PhiVRolledI	PhiVT
3.000000	0.002000	0.900000	0.900000	0.900000	0.750000	0.900000	1.000000	0.900000

Table 19: Preferences - Steel Design - AISC360-05-IBC2006, Part 3 of 3

Table 19: Preferences - Steel Design - AISC360-05-IBC2006, Part 3 of 3

PlugWeld	HSSWelding	HSSReduceT	DLRat	SDLAndLLRat	LLRat	TotalRat	NetRat
Yes	ERW	No	120.000000	120.000000	360.000000	240.000000	240.000000

8-6-7-2 Concrete design

Table 20: Preferences - Concrete Design - ACI 318-05/IBC2003, Part 1 of 2

Table 20: Preferences - Concrete Design - ACI 318-05/IBC2003, Part 1 of 2

MinEccen	PatLLF	UFLimit	SeisCat	PhiT
Yes	0.750000	0.950000	D	0.900000

Table 20: Preferences - Concrete Design - ACI 318-05/IBC2003, Part 2 of 2

Table 20: Preferences - Concrete Design - ACI 318-05/IBC2003, Part 2 of 2

PhiCTied	PhiCSpiral	PhiV	PhiVSeismic	PhiVJoint
0.650000	0.700000	0.750000	0.600000	0.850000

8-6-7-3 Aluminum design

Table 21: Preferences - Aluminum Design - AA-ASD 2000

Table 21: Preferences - Aluminum Design - AA-ASD 2000

FrameType	SRatioLimit	LatFact	UseLatFact
Moment Frame	1.000000	1.333333	No

8-6-7-4 Cold formed design

Table 22: Preferences - Cold Formed Design - AISI-ASD96

Table 22: Preferences - Cold Formed Design - AISI-ASD96

FrameType	SRatio Limit	Omega BS	Omega BUS	Omega BLTB	Omega VS	Omega VNS	OmegaT	OmegaC
Braced Frame	1.0000	1.67000	1.67000	1.67000	1.6700	1.5000	1.67000	1.800000

ATTACHMENT 9
15 Long Ton Crane

ATTACHMENT

Table of Contents

Attachment 9 – 15 Long Ton Crane

- 9-1 – Analysis Summary
- 9-2 – Reference Drawings
- 9-3 – Loads
- 9-4 – Base Reactions and Stability
- 9-5 – Translate Spud Lock Assembly Evaluation
- 9-6 – Rotate Spud Lock Assesmbly Evaluation
- 9-7 – King Pin Assembly Evaluation

9-1
Analysis Summary

15LT Crane Analysis

Objective

Evaluate the crane structure for the mothball condition, in accordance with the review criteria in Attachment 3.

Some structural components meet the review criteria by inspection and were not considered in these calculations, e.g., boom structure, rope connections, and lift machinery connections.

References

References used for this evaluation are listed in Attachment 3 – Detailed Basis of Analysis. The original American Bridge design calculations and drawings are the primary reference used and include information about the original design loads and analysis.

Analytical Method

Strengths are evaluated using the AISC ASD approach. Stability is evaluated using the AISC LRFD approach.

Manual and spreadsheet calculations are used.

Results

These calculations indicate the following:

1. Overview

   - The strength of the primary structure meets the review criteria; no overstressed locations were identified.

   - The stability of the rotor does not meet the review criteria. The rotor has an unacceptable risk of being blown over the back of the crane base during a design storm event. The front of the rotor should be lashed to the crane base.

   - Other than stability of the rotor, the risk of failure is acceptable.

   - The hurricane design wind loading results in the most severe stresses and instability.

   - Member with largest calculated stress: Spud of rotate spud lock.

     - Calculated nominal unfactored stress: 17.7 ksi (Comb 5W-ASD)
     - Allowable stress: 19.8 ksi
     - DCR = 0.89

2. A description of the analysis results by component or issue follows.

Component	**DCR**	**Comment**
Primary crane structure (e.g., boom structure, rope connections, lift machinery connections)	<1.0 by inspection	For member and connection strengths, the operating loading on the crane structure is more severe than the mothball condition and loading..
Translate Spud Lock	0.52 = (10.3/19.8 ksi)	Calculations indicate that the largest nominal stresses will occur in the channels that make up the spud. The calculations for this component are conservative because they ignore the contribution of the mechanical system and rail brakes in resisting the loading
Rotate Spud Lock	0.89 = (17.7/19.8 ksi)	Calculations indicate that the largest nominal stress will occur in the S8x17.5 section that makes up the spud.
King Pin Assembly	<0.15	Calculations indicate that the largest nominal stresses will occur in the cross beams of the base structure that hold the king pin housing. .
Overall Rotor Stability	>1.0	Refer to Attachment 9-4.

9-2
Reference Drawings

1A

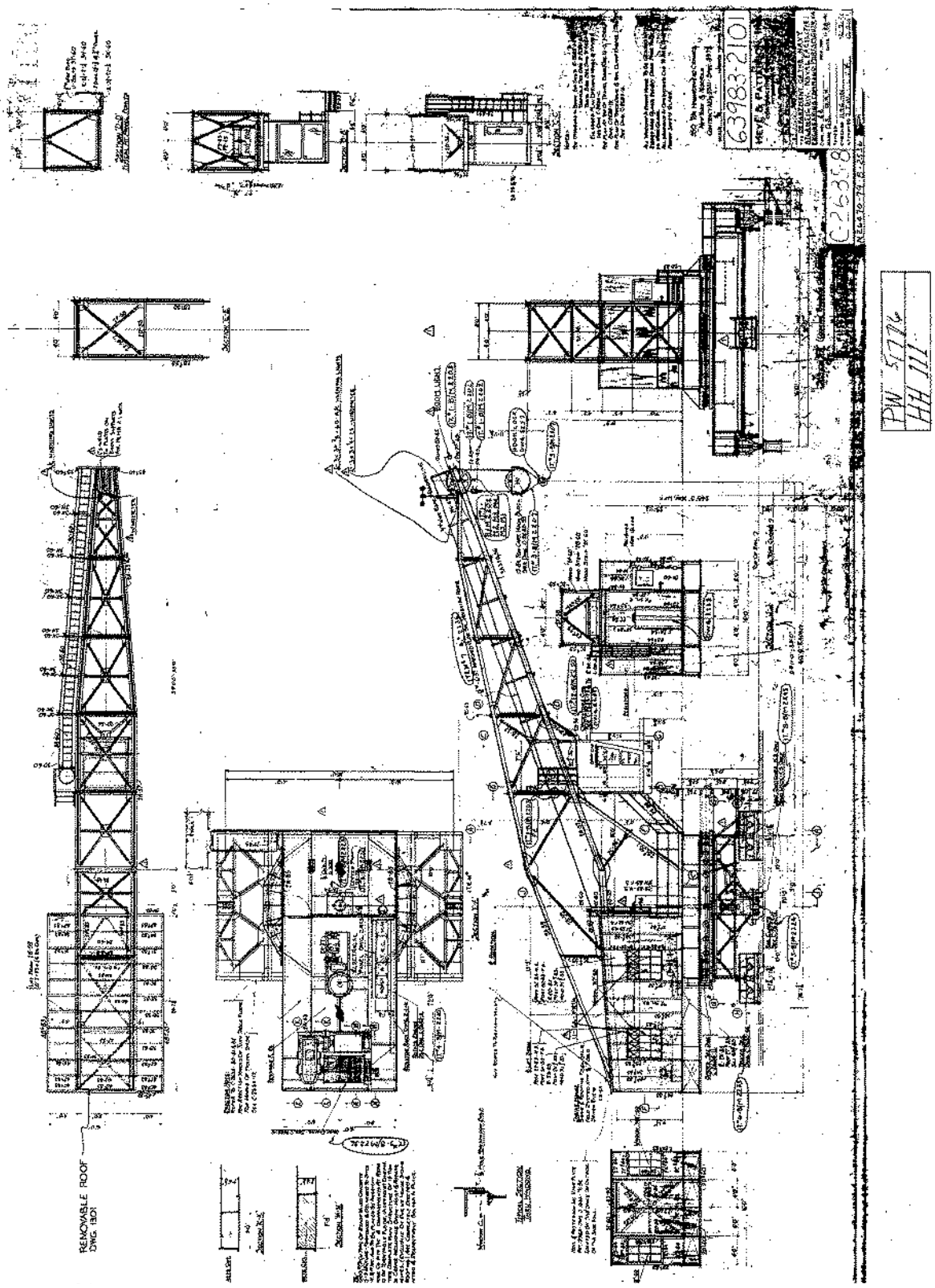

1B

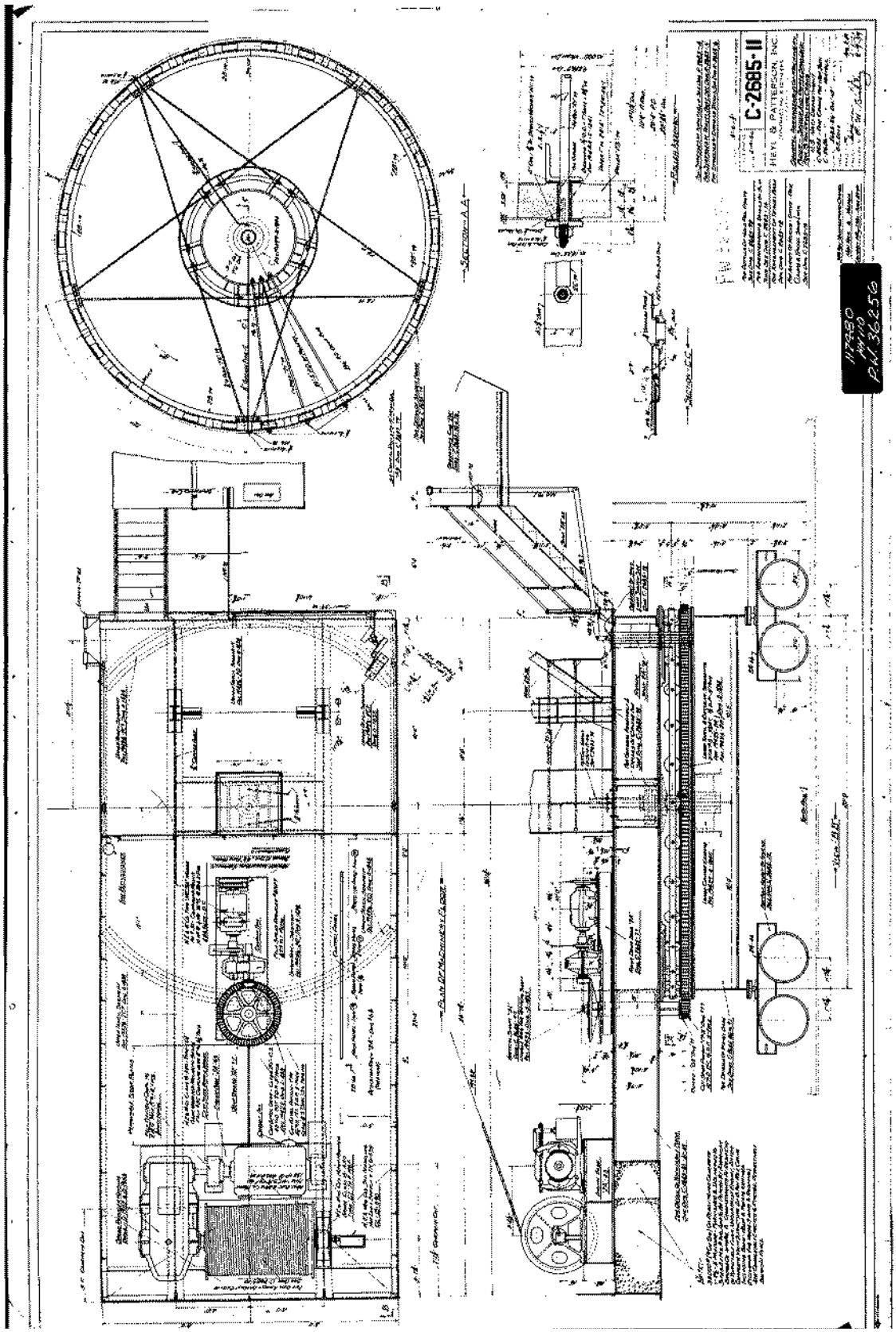

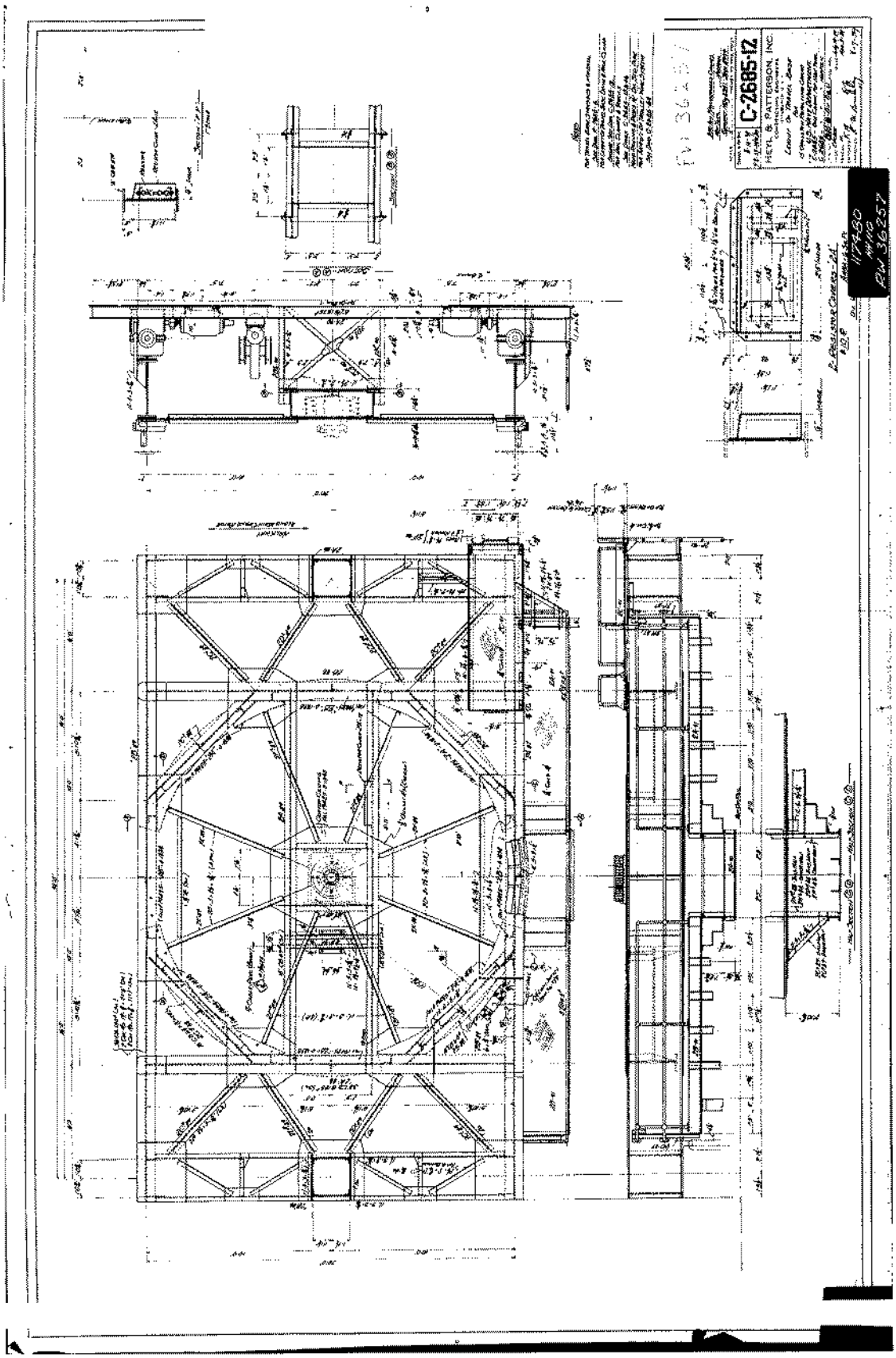
C-2685-12
HEYL & PATTERSON, INC
CONTRACTORS
PW 36257

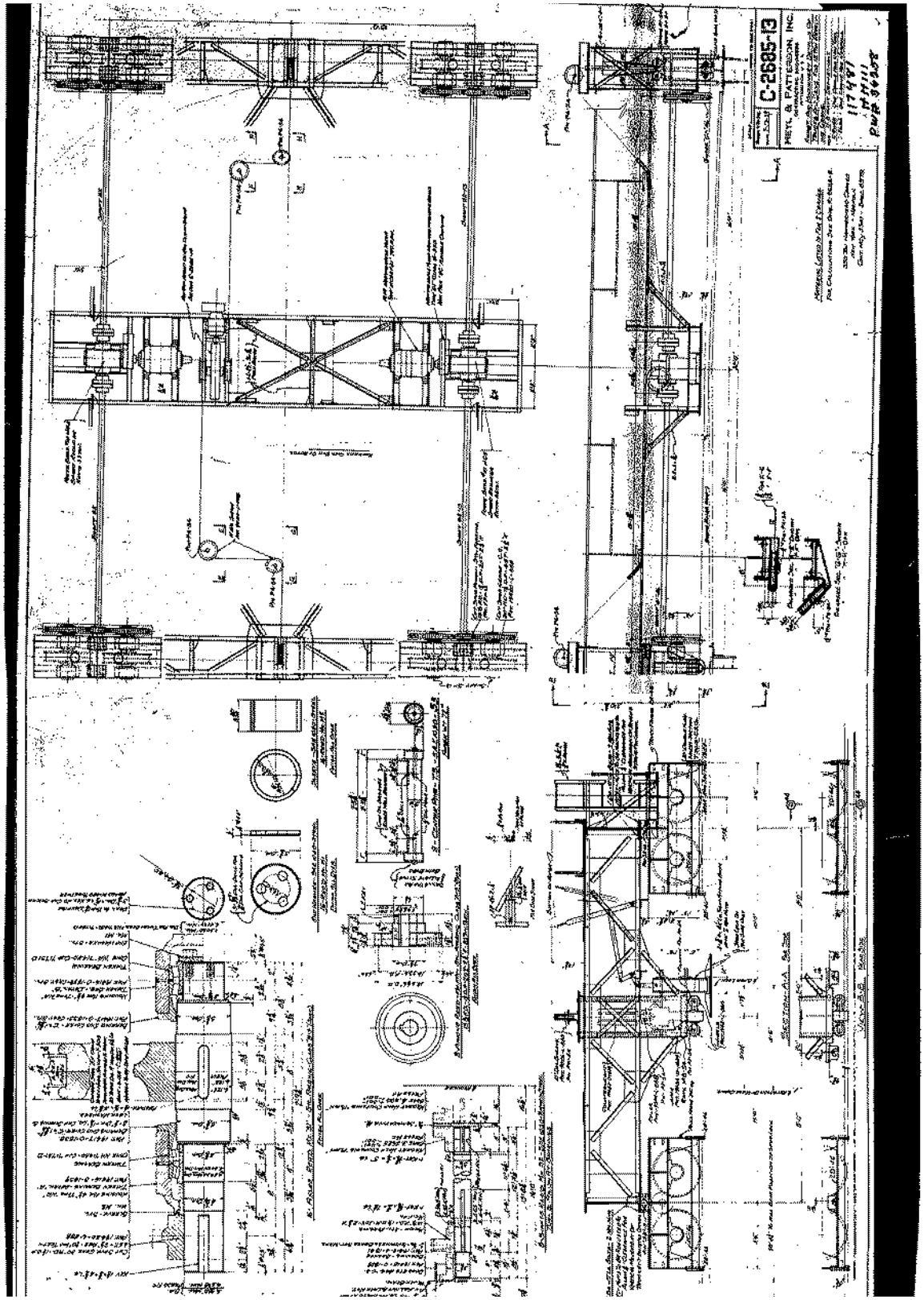
C-2685-13
RIETL & PATTERSON, INC.

9-3
Loads

15LT Crane Assessment

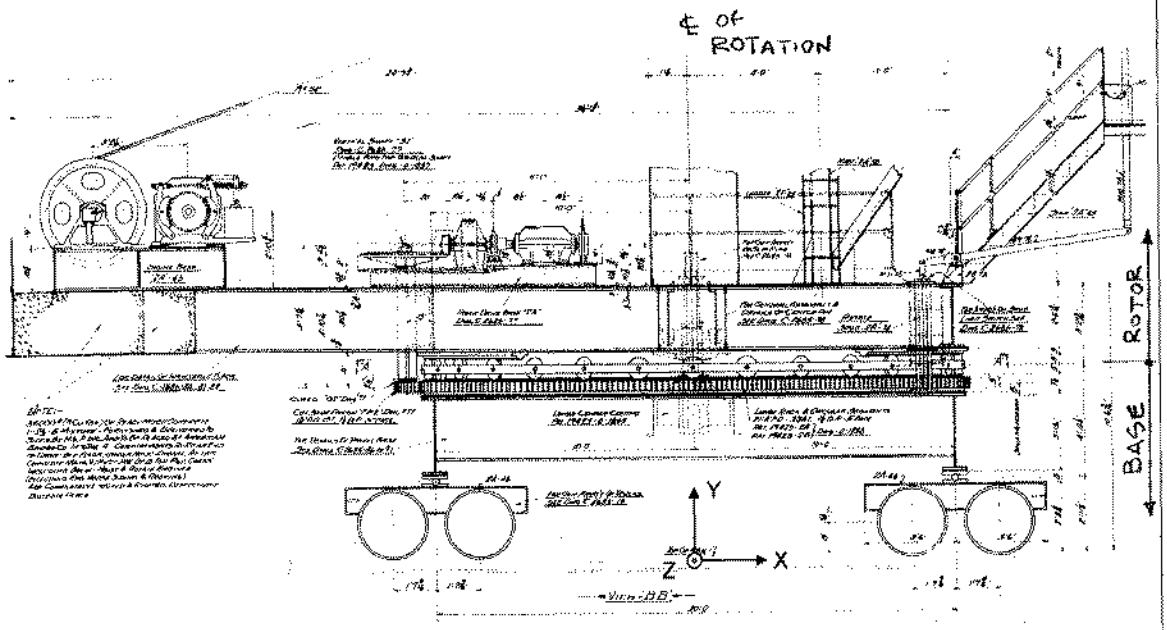

ROTOR WEIGHTS & CENTERS OF GRAVITY

DESCRIPTION	WEIGHT	LOCATION * FORWARD	LOCATION * BACKWARD
BOOM (INCLUDES BOOM OR ROOF)	31,000#	15.80	
ENGINE HOUSE	68,500#		13.07
TURNTABLE	36,500#		6.77
HOIST ENGINE	22,000#		21.22
ROTATE ENGINE	4,800#		8.95
RESISTORS & PANELS	4,500#		8.75
CWT	35,000#		23.01
HOOK BLOCK	2,150#	60.00	
ROPE (ON DRUM)	1200#		23.00
ROPE (PAID OUT)		60.00	
TOTAL D.L. ROTOR**	146,000#		7.85
15 GR TON L.L.	33,600#	60.00	
TOTAL D.L. + L.L.	179,600#	5.40	
25% L.L. IMP.	8,400#	60.00	
TOTAL D.L. + 25% L.L.	188,000#	7.85	

SEE DWG PW# 36239

TRAVEL BASE-WEIGHTS & CENTERS OF GRAVITY

DESCRIPTION	WEIGHT	LOCATION * FORWARD	LOCATION * BACKWARD
STRUCT. STEEL FOR COMPLETE BASE INCL. WALKS & R. CLIMBER SUPP.	40,500#	.80'	
SPIDER & 30 ROLLERS	6,000#	ON CENTER	
CENTER CASTING PIN SLIP RING	4,000#	" "	
TRUCKS & DRIVE GEARS WITH MOTORS	30,000#	" "	
LOWER TRACK & GEAR RING	13,000#	" "	
COMPL. R. CLIMBER MECH. & DRIVE	6,000#		1.15'
COLLECTOR SHOES & WIRING JUNCTION BOX & CABLE REEL	2,500#	3.25'	
TOTAL D.L. OF TRAVEL BASE	102,000#	.33'	

D.L. OF COMPLETE ROTOR ..... 146,000#
D.L. OF COMPLETE BASE ..... 102,000#
D.L. OF COMPLETE CRANE ..... 248,000#

* HORIZONTAL ARMS ARE TAKEN FROM ℄ OF ROTATION FORWARD (TOWARD BOOM) BACKWARD (TOWARD HOUSE)

** EXCLUSIVE ROLLERS & SPIDER WEIGHT

2

File: I:\s1968\calcs\grids-visio\[15lt_crane-misc.xlsx]sheet1
By: djl
Date: 12/19/2012

15LT Crane Loads

Units: k, ft
File Printed: 01/24/13

SEE PREV. PAGE & FIGURE BELOW

Component	Force	Center of Force X	Y	Z	Notes
	k	ft	ft	ft	
Dead Load					
Rotor					
Boom	31.0	15.8	31.5	0	APPROX. (SCALED)
House	6.9	-13.1	15.3	0	
Turntable	36.5	-6.8	9.1	0	
Hoist Engine	24.0	-21.2	13.5	0	SEE TABLES ON PREVIOUS PAGE
Rotate Engine	4.8	-9.0	12.5	0	
Electrical	4.5	-8.8	13.0	0	
Counterweight	35.0	-23.0	9.0	0	
Hook Block	2.2	60.0	42.0	0	
Misc (Rope on drum)	1.2	-23.0	13.0	0	
Rotor Total	146.1	-7.8	15.6	0	
Base					
Structure	40.5	0.8	5.0	0	
Spider, rollers, & hardware	59.0	0.0	7.0	0	
Misc	2.5	3.3	5.0	0	
Base Total	102.0	0.4	6.2	0	
Total	248.1	-4.4	11.7	0	
Wind Load - X-Dir (End Wind)					
Rotor	11.2	-	22.5	0	350 SF SEE (A) ON NEXT PAGE
Base	6.1	-	3.0	0	192 SF = 32*6'
Total	17.3	-	15.6	0	
Wind Load - Z-Dir (Side Wind)					
Rotor	15.2	9.1	22.5	-	475 SF ← SEE (B) ON NEXT PAGE
Base	3.8	0.0	3.0	-	120 SF = 20*6'
Total	19.0	7.2	~~22.5~~ 18.6'	-	

Notes

1. Origin is at center of rotation at the top of rail, SEE PREV PAGE & FIG. BELOW
2. Loads are based on original design calculations. Refer to Heyl & Patterson calculation dwg R-2685-2 (PW#36237) for load information.
3. Wind loads are based on a wind pressure of 32 PSF. Refer to Review Criteria.

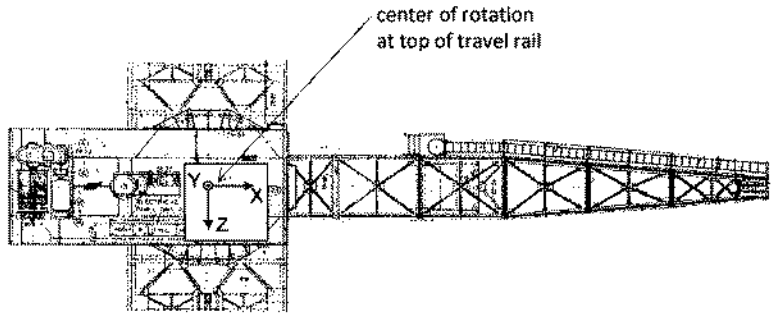

Analysis Coordinate System

3

15LT Crane Assessment

Original Rotor Calcs.

REF. ORIGINAL CALCS.

D.L. Structure	28,000
D.L. Engine Room (Siding & Doors)	7,000
1.25 Hook Load	46,000
Total	81,000

Longitudinal Load = 10% = 8000#

5000	×	21.35	= 106,900
1000	×	21.75	= 21,750
1500	×	8.51	= 12,765
500	×	0	= 0
8000			192,615 Ft. Lbs.

Reactions $\frac{192,615}{31}$ = 6200#

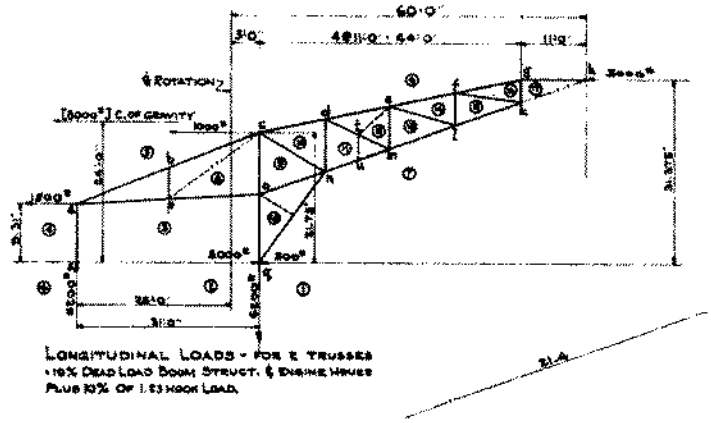

Longitudinal Loads - For 2 Trusses
= 10% Dead Load Boom Struct. & Engine House
Plus 10% of 1.25 Hook Load.

500	×	0	= 0
1600	×	9.31	= 14,896
750	×	21.75	= 16,313
350	×	21.35	= 10,593
3300#			42,192 Ft. Lbs.

Reactions $\frac{42,192}{31}$ = 1350#

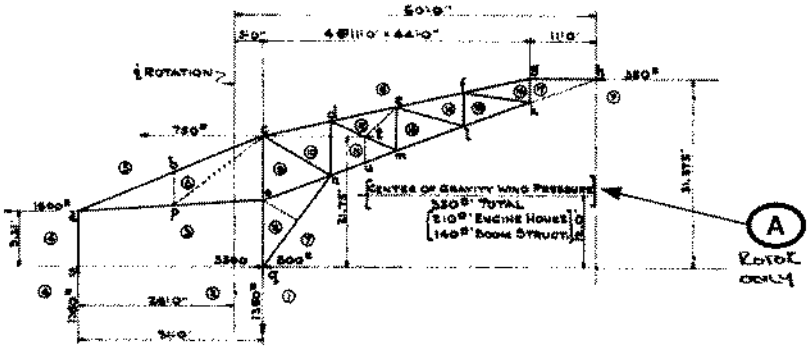

10#/Sq. Ft. End Wind Loads
For 2 Trusses

4750# / 10 PSF = 475 SF (B) Rotor only

200	×	86.	= 17,200
300	×	73.	= 22,200
300	×	64.	= 19,200
600	×	53.	= 31,800
700	×	42.	= 29,400
900	×	31.	= 27,900
340	×	24.38	= 12,150
660	×	5.25	= 3,460
350	×	0.	= 0
4750#			166,600 Ft. Lbs.

R. Reaction $\frac{166,600}{31}$ = 5370#

or $\frac{4750 \times 35.06}{31}$ = 5370#

L. Reaction = 5370 − 4750 = 620#

Center of Gravity Wind Pressure $\frac{166,600}{4750}$ = 35.06

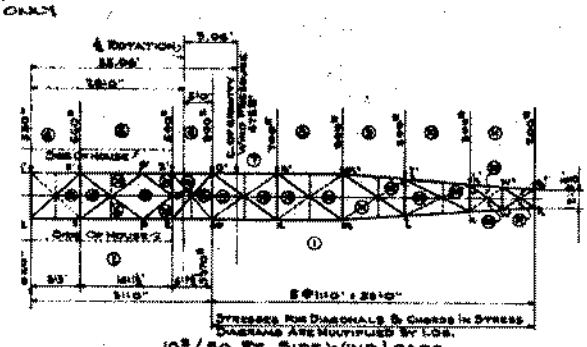

10#/Sq. Ft. Side Wind Loads
Bottom Chord Carries Total Load.

9-4
Base Reactions and Stability

4A

15LT CRANE

CRANE STABILITY

SIDE VIEW

See "15LT Crane Loads" for Loads

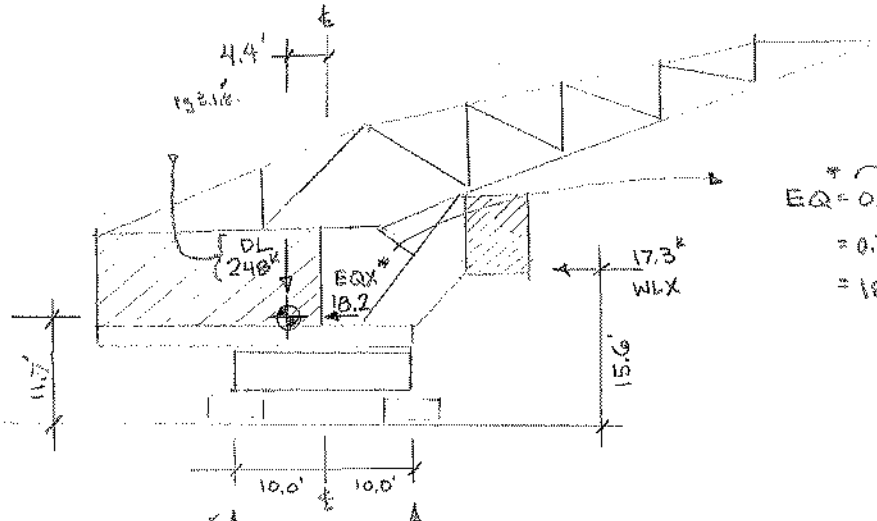

$EQ^* = 0.7 \times R \times \overbrace{(0.035\ W)}^{.0735}$

$= 0.7 \times 3.0 \times (.035 \times 248)$

$= 18.2^k$

179^k ↑ DL ↑ 69^k/SIDE

13.5^k ↑ WLX ↓ 13.5^k/SIDE $= 17.3^k \times \left(\frac{15.6'}{20.0'}\right)$

10.4 ↑ EQX* ↓ 10.4^k/SIDE $= 18.2^k \times \left(\frac{11.7}{20.0}\right)$

(DOES NOT CONTROL)

$P_{min} = 0.9 \times 69^k - 1.6 \times 13.5^k$

$= 40.5^k$ ∴ NO UPLIFT

END VIEW

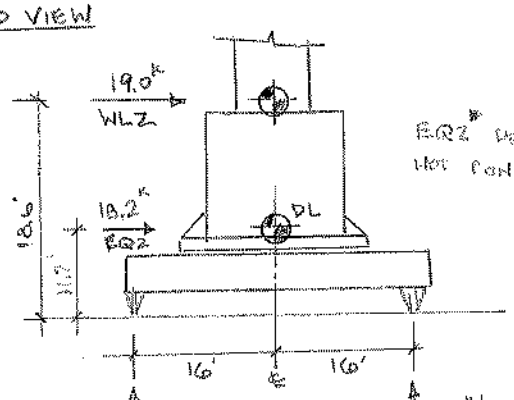

EQZ* DOES NOT CONTROL

$P_{min} \geq 0$ ∴ NO UPLIFT

124 ↑ DL ↑ 124^k/SIDE

11.0 ↓ WLZ ↑ 11.0^k/SIDE $= 19.0 \times \left(\frac{18.6'}{32.0'}\right)$

4B

Refer to "15LT Crane Loads" for Loads

ONLY ROTOR PORTION OF LOAD IS USED.

15LT CRANE

ROTOR STABILITY

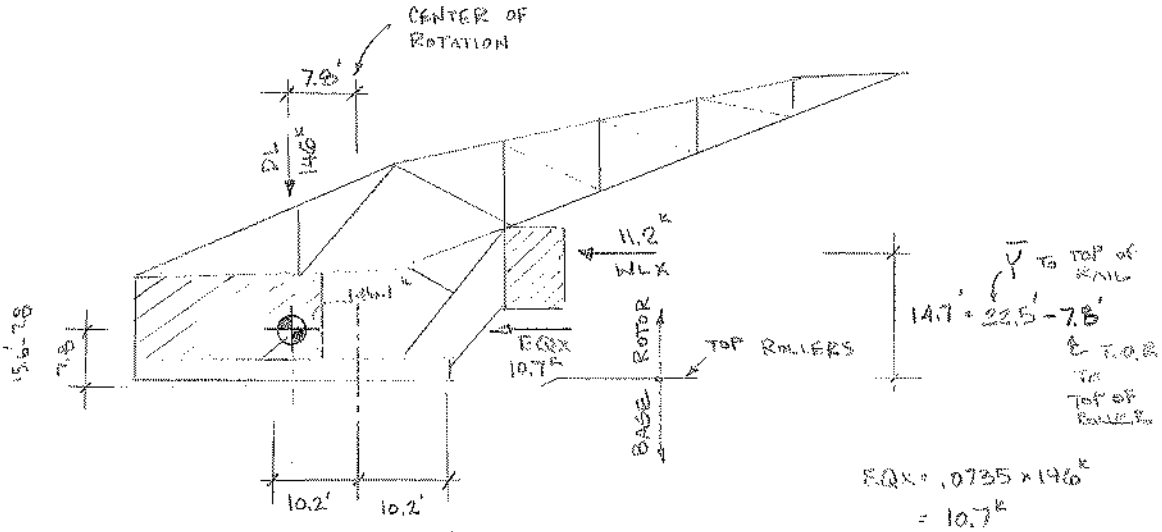

EQX = .0735 × 146K
= 10.7K
DOES NOT CONTROL

DL 1139 K-FT = 146K × 7.8'
146K

WLX 165 K-FT = 11.2K × 14.7'
11.2K

COMBINED LOAD 0.9 DL + 1.6 WLX

1405 K-FT = 1.0 × 1139 K-FT + 1.6 × 165 K-FT
11.2
131K = 0.9 × 146K

$X = \frac{1405 \text{ K-FT}}{131 \text{ K}} = 10.7' > 10.2' = \frac{20'-4''}{2}$ SUPPORT RING DIAM.

∴ ROTOR IS UNSTABLE
PROVIDE RESTRAINT

9-5
Translate Spud Lock Assembly Evaluation

5

15LT Crane Assessment

Translate Spud Lock

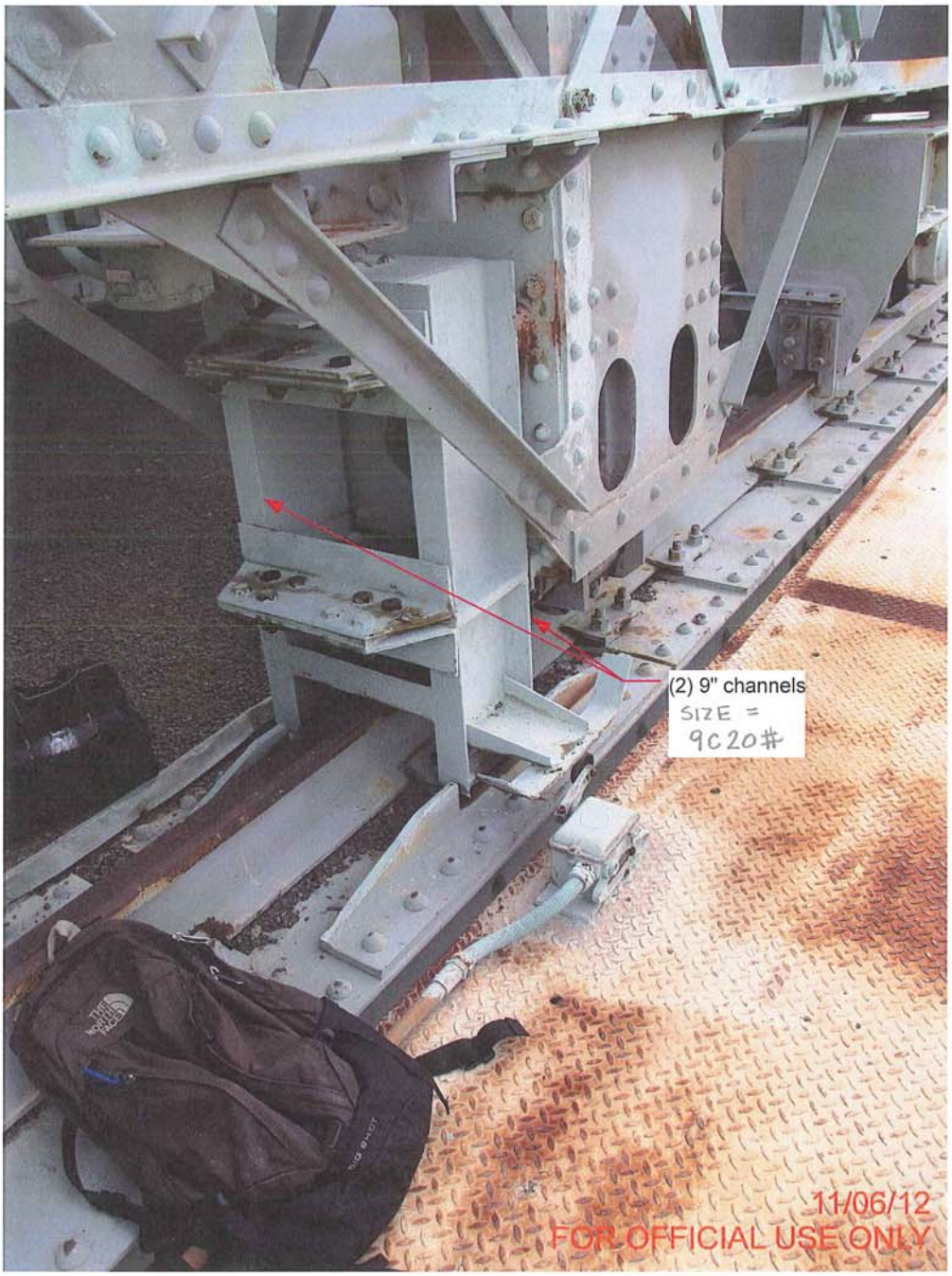

6A

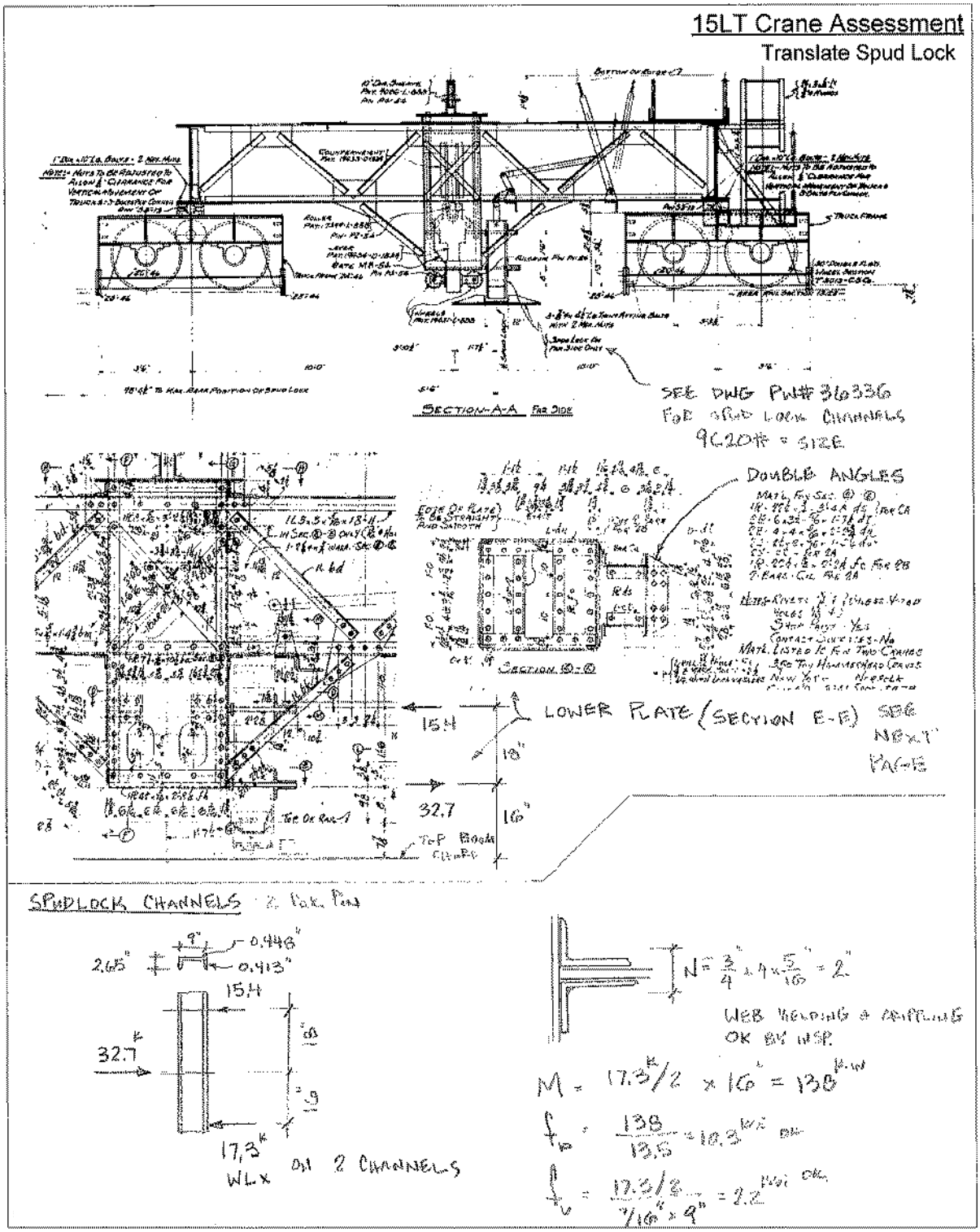
15LT Crane Assessment
Translate Spud Lock
SECTION-A-A
SEE DWG PW# 36336
FOR SPUD LOCK CHANNELS
9C20# = SIZE
DOUBLE ANGLES
LOWER PLATE (SECTION E-E) SEE NEXT PAGE
15.4
32.7
16"
SPUDLOCK CHANNELS
2.65"
0.448"
0.413"
17.3K
WLX ON 2 CHANNELS
N = 3/4 + 4 x 5/16 = 2"
WEB WELDING & CRIPPLING OK BY WSP.
M = 17.3K/2 x 16" = 138 K-in
f_b = 138/13.5 = 10.3 KSI OK
f_v = 17.3/2 / 5/16" x 9" = 2.2 KSI OK

GB

LOWER PLATE

TRANSLAGE STOP LOCK

- Not all rivets are shown.
- Tension case shown. Comp. case OK.

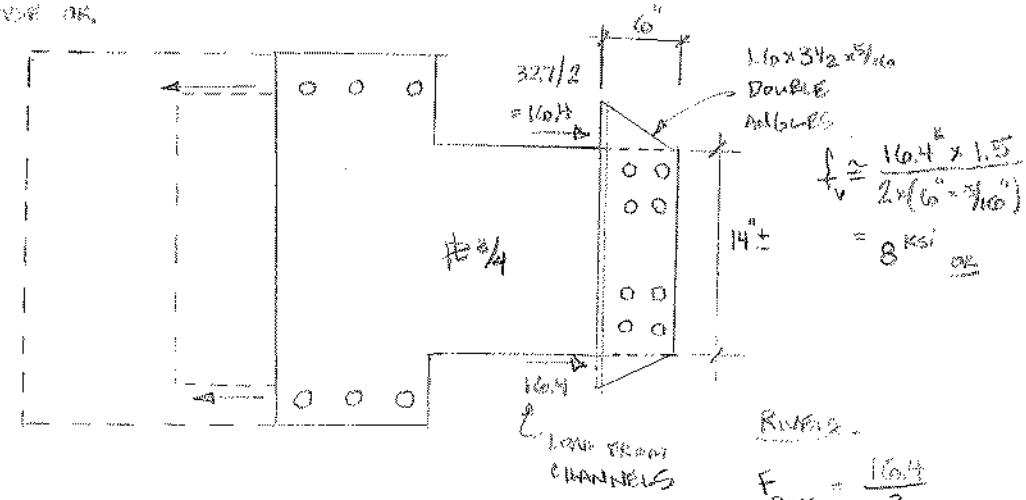

$$f_v \cong \frac{16.4^k \times 1.5}{2 \times (6" - 3/16")} = 8^{ksi}$$ OK

Rivets.

$$F_{rivet} = \frac{16.4}{3} = 5.5^k$$ < Des. shear capy of rivet

Tension in plate

$$f_A = \frac{16.4^k}{3/4" \times 7"} = 3.1^{ksi}$$ Shear & bearing OK for rivet

9-6
Rotate Spud Lock Assembly Evaluation

7A

Hammerhead Crane **Max. Rotate Spud Lock and King Pin Loads**

L:\S1988\Calcs\Grids-Visio\[EQ and Wind Angle for Max Pin Loads.xlsx]Wind-15LT_Crane

Date:

WLX = 11.2 k
WLZ = 15.2 k at 9.1 ft from Center of Rotation

Spud Lock Distance 11.25 ft
Spud Lock Angle 40 degrees

	Wind		Rotate Spud Lock			King Pin			TOTAL		
Angle	Wx	Wz	S_X	S_Z	S_R	P_X	P_Z	P_R	ΣP_X	ΣP_Z	ΣP_R
0	11.2	0.0	0.0	0.0	0.0	11.2	0.0	11.2	11.2	0.0	11.2
5	11.2	1.3	0.7	0.8	1.1	11.8	-0.5	11.9	11.2	1.3	11.2
10	11.0	2.6	1.4	1.6	2.1	12.4	-1.0	12.4	11.0	2.6	11.3
15	10.8	3.9	2.0	2.4	3.2	12.9	-1.5	13.0	10.8	3.9	11.5
20	10.5	5.2	2.7	3.2	4.2	13.2	-2.0	13.4	10.5	5.2	11.7
25	10.2	6.4	3.3	4.0	5.2	13.5	-2.4	13.7	10.2	6.4	12.0
30	9.7	7.6	4.0	4.7	6.1	13.7	-2.9	14.0	9.7	7.6	12.3
35	9.2	8.7	4.5	5.4	7.1	13.7	-3.3	14.1	9.2	8.7	12.7
40	8.6	9.8	5.1	6.1	7.9	13.7	-3.7	14.2	8.6	9.8	13.0
45	7.9	10.7	5.6	6.7	8.7	13.5	-4.1	14.1	7.9	10.7	13.4
50	7.2	11.6	6.1	7.2	9.4	13.3	-4.4	14.0	7.2	11.6	13.7
55	6.4	12.5	6.5	7.7	10.1	12.9	-4.7	13.7	6.4	12.5	14.0
60	5.6	13.2	6.8	8.2	10.6	12.4	-5.0	13.4	5.6	13.2	14.3
65	4.7	13.8	7.2	8.5	11.1	11.9	-5.2	13.0	4.7	13.8	14.6
70	3.8	14.3	7.4	8.9	11.6	11.3	-5.4	12.5	3.8	14.3	14.8
75	2.9	14.7	7.6	9.1	11.9	10.5	-5.6	11.9	2.9	14.7	15.0
80	1.9	15.0	7.8	9.3	12.1	9.7	-5.7	11.3	1.9	15.0	15.1
85	1.0	15.1	7.9	9.4	12.2	8.8	-5.8	10.6	1.0	15.1	15.2
90	0.0	15.2	7.9	9.4	12.3	7.9	-5.8	9.8	0.0	15.2	15.2

MAX SPUD LOCK AND KING PIN LOADS OCCUR AT A WIND ANGLE OF 90 DEGREES (Z-DIRECTION).

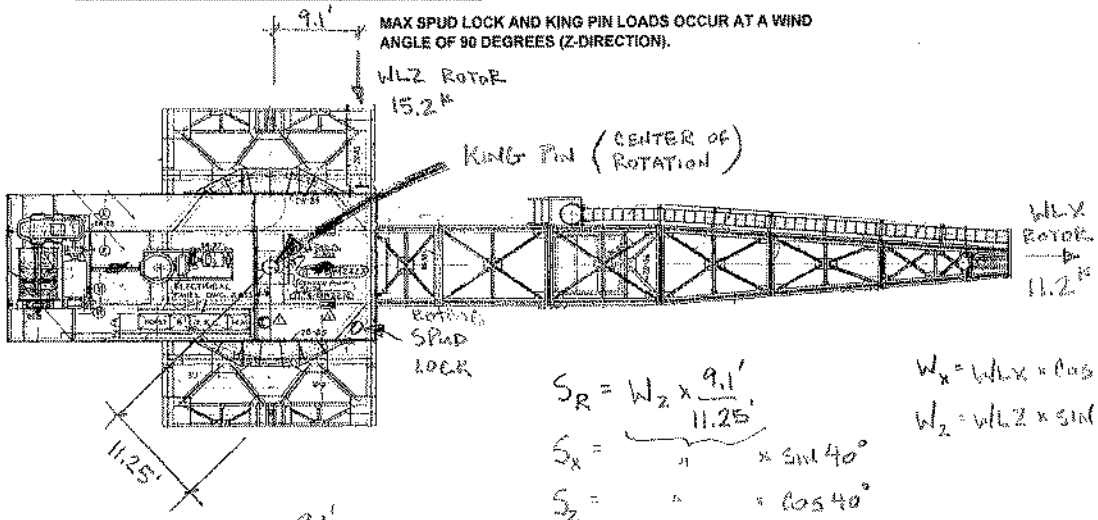

$$S_R = W_Z \times \frac{9.1'}{11.25'}$$

$$S_X = \underbrace{\quad}_{''} \times \sin 40^\circ$$

$$S_Z = \quad '' \quad \times \cos 40^\circ$$

$$W_X = WLX \times \cos\theta$$

$$W_Z = WLZ \times \sin\theta$$

$$P_X = W_X + S_X$$

$$P_Z = W_Z - S_Z$$

$$P_R = \sqrt{P_X^2 + P_Z^2}$$

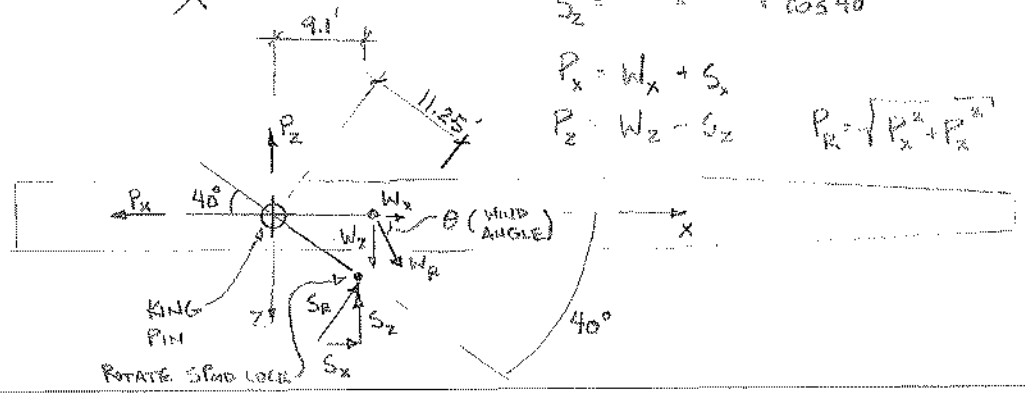

78

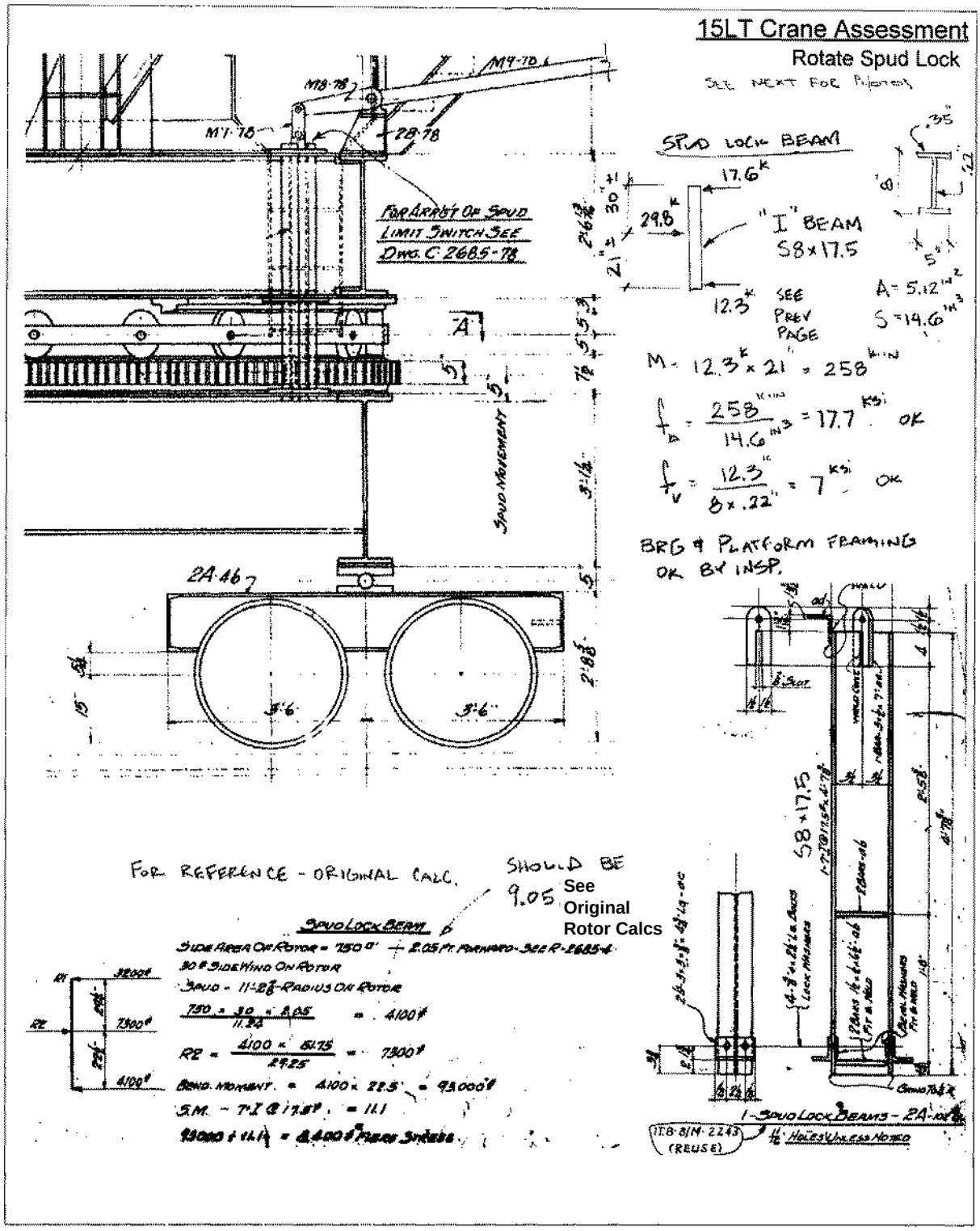
15LT Crane Assessment
Rotate Spud Lock
SPUD LOCK BEAM
17.6k
29.8k
12.3k
"I" BEAM
S8x17.5
SEE PREV PAGE
A = 5.12 in²
S = 14.6 in³
M = 12.3k x 21" = 258 k-in
fb = 258 k-in / 14.6 in³ = 17.7 ksi OK
fv = 12.3k / 8 x .22" = 7 ksi OK
BRG & PLATFORM FRAMING OK BY INSP.
FOR ARRAY OF SPUD LIMIT SWITCH SEE DWG. C 2685-78
SPUD MOVEMENT
2A-46
3'-6"
3'-6"
FOR REFERENCE - ORIGINAL CALC.
SHOULD BE 9.05
See Original Rotor Calcs
SPUD LOCK BEAM
SIDE AREA OF ROTOR = 750 □' + 2.05 ft FORWARD - SEE R-2685-4
30# SIDE WIND ON ROTOR
SPUD - 11'-2 1/8" RADIUS ON ROTOR
750 x 30 x 2.05 / 11.24 = 4100#
RE = 4100 x 15.75 / 29.25 = 7300#
BEND. MOMENT = 4100 x 22.5 = 93000#
S.M. = 7.1 @ 17.5# = 11.1
93000 ÷ 11.1 = 8400# PRACT. STRESS
S8x17.5
1-SPUD LOCK BEAMS - 2A-10
(REUSE)
1/2" HOLES UNLESS NOTED

7c

15LT Crane Assessment

Rotate Spud Lock

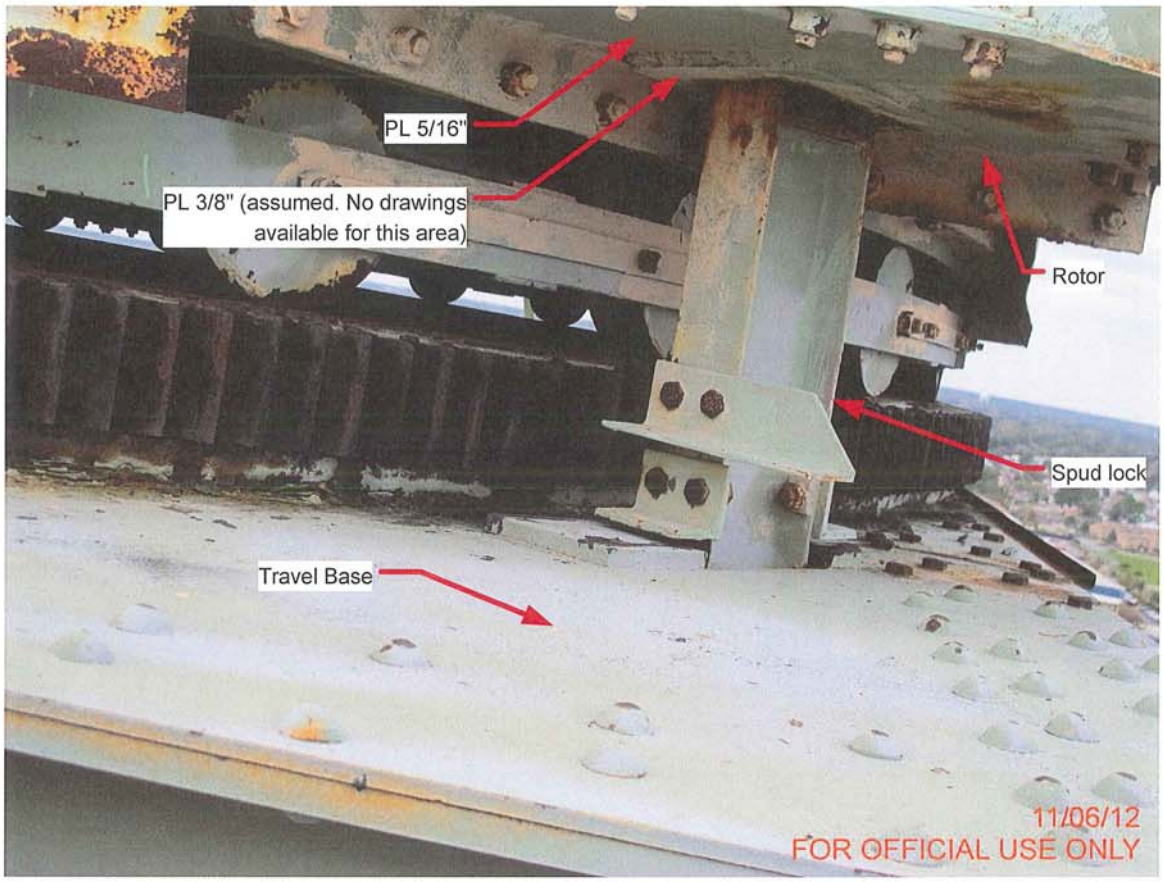

15LT Crane Assessment

Rotate Spud Lock

SOCKET AT ROTOR FRAME

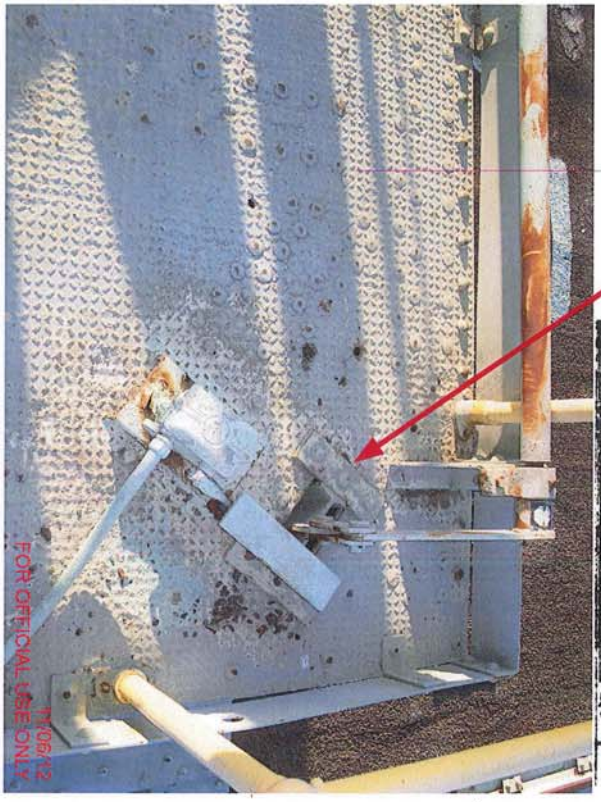

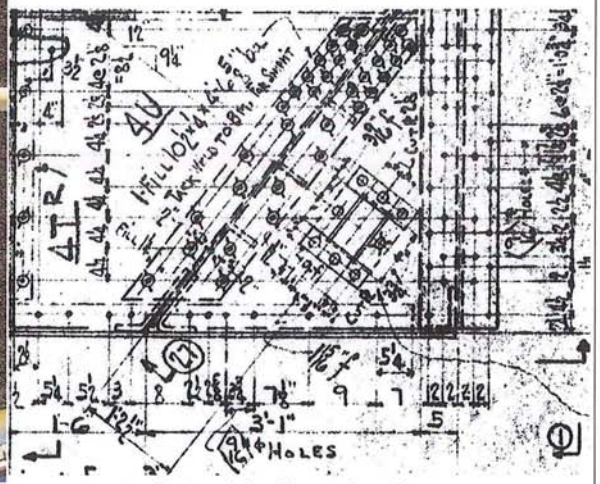

Rotor – Top Flange Level
(H&P dwg C-2685-80;
PW#36325)

BOTTOM ROTOR FLANGE LEVEL

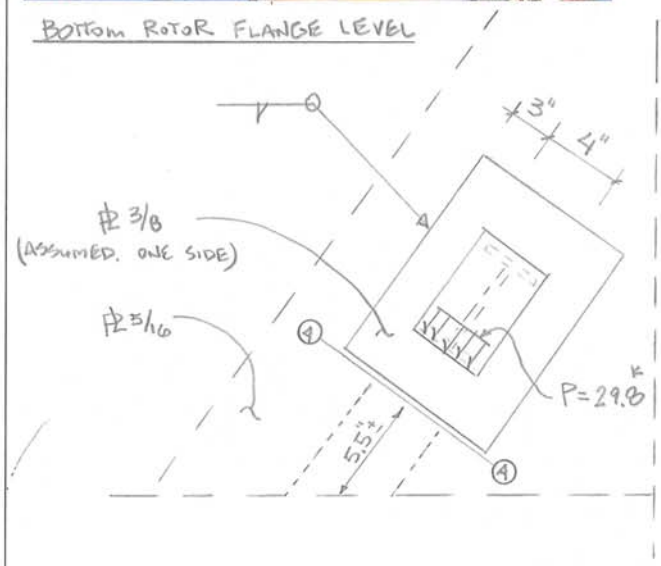

SECTION A-A

$$f_a = \frac{29.8^k}{5/16" \times 10"} = 9.5^{ksi}$$

$$\frac{kl}{r} = \frac{1.0 \times 5.5"}{5/16/\sqrt{12}} = 61$$

$F_a = 16.3^{ksi}$ (FOR $\frac{kl}{r} = 61$) PLATE BUCKLING OK

REINF PL, WELD, & RIVETS OK BY INSP. TOP FLANGE LEVEL IS SIMILAR W/ SMALLER LOADS. OK

9

15LT Crane Assessment

Rotate Spud Lock

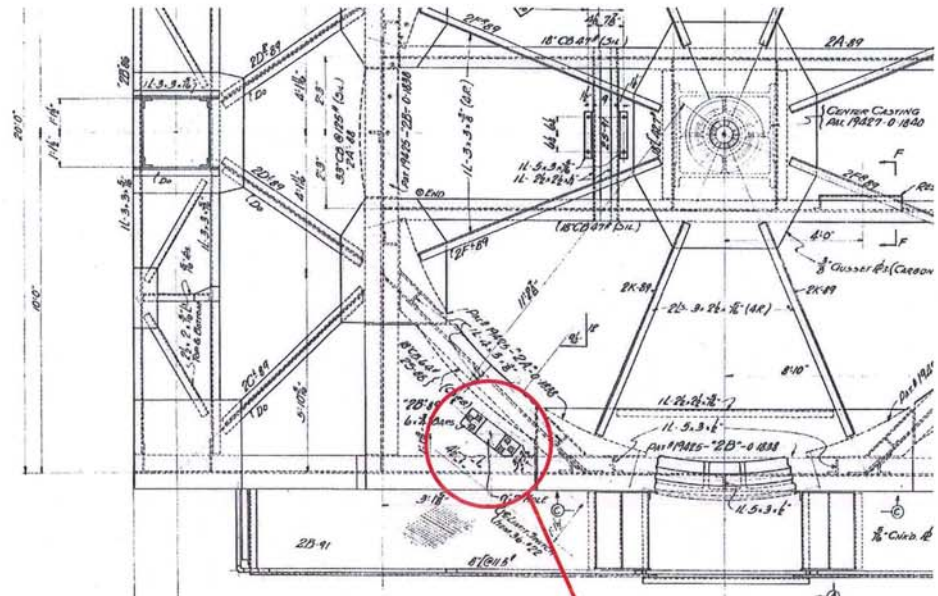

Travel Base Frame

SEC A-A

$f_A = \frac{12.3^k}{3/8" \times (7" + 2 \times 6")} = 1.7^{KSI}$

OK

PLATE 2B
$t = 3/8"$
(DWG PW# 36334)

RIVETS OK BY INSP.

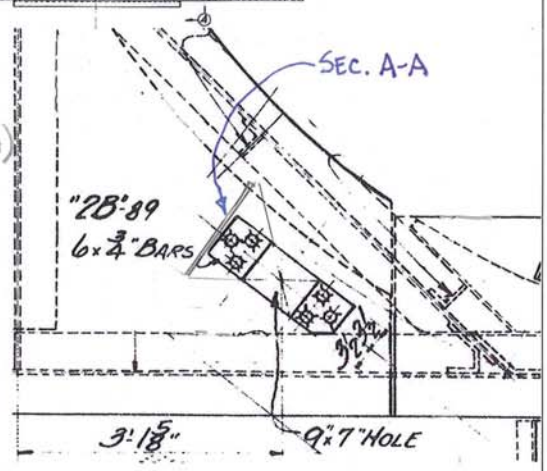

Travel Base Frame

8" BEAMS

REFERENCES, SEE COLUMN (1) AND PAGE 4

3	11	14	17	22	1, 6, 9, 10, 19, 23, 24
S3-1909	C1913	C1927	C1928	CB81, 8X5¼	See Page 79
S4-1911	C1915	16	C1929	C1934	8
S12-1922	12	C1927	C1930	IL1934	See Page 79
S15-1924	C1916	C1928	21	8WFCB81, 8X5¼	
5	C1917	C1929	CB81, 8X5¼	CIL1940	
S16-1925	C1920	C1930	C1934	CIL1946	
S18-1926	13	C1931	IL1934	CIL1948	
7	C1921	C1933	8WFCB81, 8X5¼	US1950	
S40-1931	C1923		CIL1940		

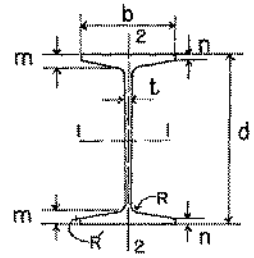

*Computed

SECT. NO. OR NOM. SIZE	COL. (1)	WEIGHT PER FOOT Lb.	AREA Sq. In.	DEPTH d In.	FLANGE WIDTH b In.	WEB THICK t In.	DIMENSIONS m In.	n In.	R In.	R' In.	SLOPE INSIDE FLANGE %	AXIS 1—1 I In.⁴	S In.³	r In.	AXIS 2—2 I In.⁴	S In.³	r In.
8WF 8X5¼	24	22.5	6.61	8.000	5.395	.375	.352†		–	–	10.5	68.3	17.1	3.23	7.5	2.8	1.08
B8	1	21.25	6.25	8.000	5.370	.360	.493	.180	.28	0	12.5*	64.7	16.2	3.22	6.8	2.53*	1.05
B8	7	21.0	6.20	8.190	5.275	.260	.504	.296	.30	0	8⅓*	73.5	17.9	3.44	8.59	3.26	1.18
8WF B8 8X5¼	8	21.0	6.18	8.190	5.272	.252	.403†		.30	0	5.0	73.8	18.0	3.45	9.13	3.5	1.22
8WF CB81 8X5¼	21	21.0	6.18	8.190	5.272	.252	.403	.403	.32	0	0	73.8	18.0	3.45	9.13	3.5	1.22
B39	16	21.0	6.17	8.000	5.110	.360	.446	.238	.25	0	8¾*	63.4	15.9	3.21	6.6	2.6	1.03
8WF B8 8X5¼	10	20.0	5.88	8.140	5.268	.248	.378†		.30	0	5.0	69.2	17.0	3.43	8.5	3.2	1.20
8WF CB81 8X5¼	23	20.0	5.88	8.140	5.268	.248	.378	.378	.32	0	0	69.2	17.0	3.43	8.5	3.2	1.20
B8	3	19.5	5.78	8.000	5.325	.325	.430	.205	.30	0	9.0*	60.6	15.1	3.24	6.7	2.51	1.08
B8	6	19.0	5.68	8.060	5.270	.270	.448	.240	.30	0	8⅓*	63.7	15.8	3.35	7.2	2.73	1.13
B8	5	19.0	5.62	8.060	5.270	.270	.448	.240	.30	0	8⅓*	62.9	15.6	3.35	7.2	2.73	1.13
B8 8X5¼	7	19.0	5.60	8.090	5.265	.250	.454	.246	.30	0	8⅓*	64.3	15.9	3.39	7.32	2.78	1.14
8WF B8 8X5¼	9	19.0	5.59	8.090	5.264	.244	.353†		.30	0	5.0	64.7	16.0	3.40	7.87	3.0	1.19
8WF CB81 8X5¼	21	19.0	5.59	8.090	5.264	.244	.353	.353	.32	0	0	64.7	16.0	3.40	7.87	3.0	1.19
B39N 8X5	19	19.0	5.59	8.000	5.037	.287	.446	.238	.25	0	6¾*	60.3	15.1	3.29	6.3	2.5	1.06
8WF 8X5¼	24	18.5	5.44	8.000	5.250	.230	.352†		–	–	10.5	62.1	15.5	3.38	6.9	2.6	1.13
B8	1	18.0	5.37	8.000	5.260	.250	.493	.180	.28	0	12.5*	60.0	15.0	3.34	6.4	2.43*	1.09
B39	14	18.0	5.29	8.000	5.000	.250	.446	.238	.25	0	8¾*	58.7	14.7	3.33	6.1	2.4	1.07
B8	6	17.5	5.20	8.000	5.250	.250	.418	.210	.30	0	8⅓*	57.7	14.4	3.33	6.39	2.44	1.11
B8	3	17.5	5.18	8.000	5.250	.250	.430	.205	.30	0	9.0*	57.4	14.3	3.33	6.4	2.43	1.11
B38	11	17.5	5.15	8.000	4.330	.210	.583	.240	.33	0	16⅔*	58.3	14.6	3.37	4.5	2.1	0.93
B8	5	17.5	5.14	8.000	5.250	.250	.418	.210	.30	0	8⅓*	56.9	14.2	3.33	6.39	2.43	1.11
B39	17	17.5	5.14	8.000	4.981	.231	.446	.238	.25	0	8¾*	57.4	14.5	3.36	6.0	2.4	1.08
B68	13	17.5	5.13	8.000	5.000	.220	.457	.240	.18	0	9.0*	58.4	14.6	3.38	6.2	2.5	1.10
B68	12	17.5	5.12	8.000	5.000	.220	.457	.240	.18	0	9.0*	58.4	14.6	3.38	6.2	2.5	1.10
B8 8X5¼	1	17.0	5.00	8.000	5.250	.235	.409	.201	.30	0	8⅓*	56.0	14.0	3.35	6.16	2.35	1.11
8WF B8 8X5¼	9	17.0	5.00	8.000	5.250	.230	.308†		.30	0	5.0	56.4	14.1	3.36	6.72	2.6	1.16
8WF CB81 8X5¼	22	17.0	5.00	8.000	5.250	.230	.308	.308	.32	0	0	56.4	14.1	3.36	6.72	2.6	1.16
B39 8X5	19	17.0	5.00	8.000	4.963	.213	.446	.238	.25	0	8¼*	57.2	14.3	3.38	6.0	2.4	1.09
B8	1	16.25	4.81	8.000	5.190	.180	.493	.180	.28	0	12.5*	57.0	14.3	3.44	6.1	2.35*	1.12

† Average thickness

58×17.5

9-7
King Pin
Assembly Evaluation

15LT Crane ANALYSIS

King Pin

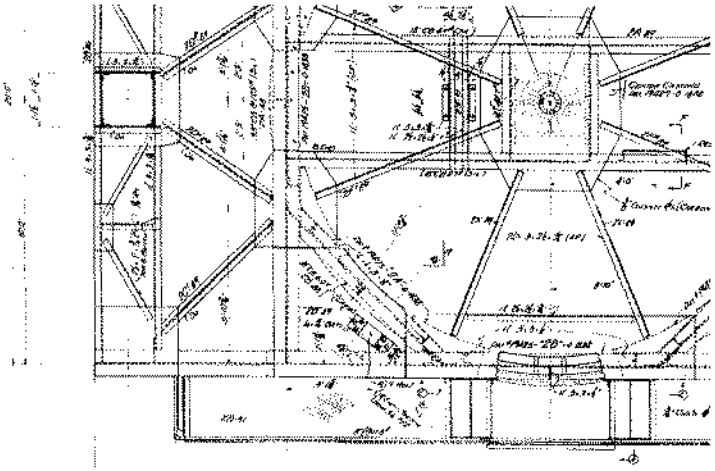

MAX LOAD

$P = 14.2^{K}$ See Maximum Rotate Spud Lock and King Pin Loads.

CHECK PIN

$$f_v = \frac{14.2^{K} \times 4/3}{\pi(5^2 - 3^2)} = .4^{KSI}$$

$$f_b \cong \frac{14.2^{K} \times 15^{in}}{.1 \times (10^3 - 6^3)} = 3^{KSI}$$

PIN OK

- BEARINGS & LATINGS OK BY INSPECTION.

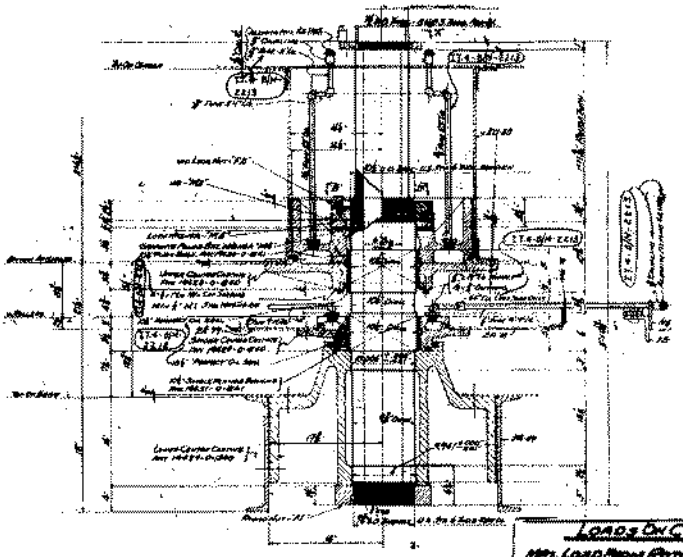

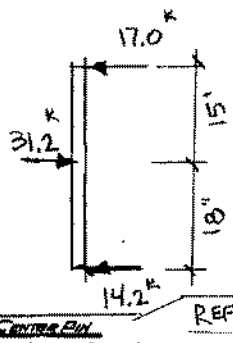

(H&P dwg 6398-3-2218; PW#51789)

REF. - ORIGINAL CALCS

LOADS ON CENTER PIN

MAX. LOAD FROM ROTOR = 36,700# SEE R-3685-5

TENSION FORWARD ON 1 ROD = 1860# " " -6

TENSION TO REAR ON 1 ROD = 870# " " -6

RESULTANT THRUST = 2[(1860 − 870) (Cos 12° + Cos 24° + Cos 36°)] + 1890

= (1890 × 5.4) + 1890 = 10,180# ON SPIDER BEARING

MAX. BEND = (36,700 × 15) + (10,200 × 4.5) = 596,000#

S.M. = $\left(\frac{10^4 - 6^4}{10}\right) .098$ = 85.3

596,000 ÷ 85.3 = 7000 #/in²

BEARING PRESSURE @ "A" = $\frac{36,700}{10.25 \times 5}$ = 720 #/in²

BEARING PRESSURE @ "B" = $\frac{10,200}{10.25 \times 5.5}$ = 180 #/in²

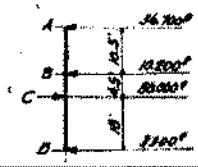

SPIDER THRUST FROM ROLLERS

11

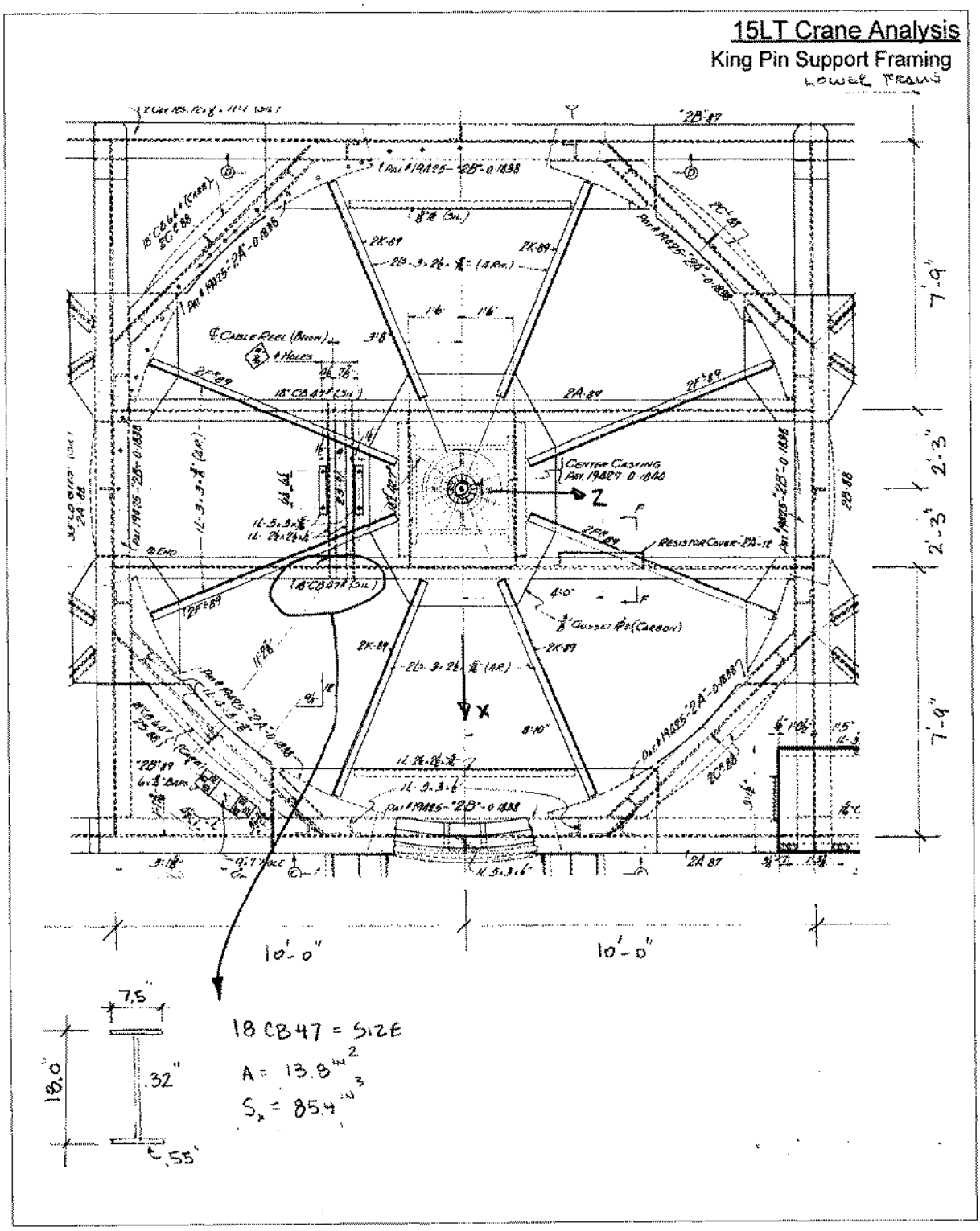
15LT Crane Analysis
King Pin Support Framing
LOWER FRAME
CENTER CASING
RESISTOR COVER
7'-9"
2'-3"
2'-3"
7'-9"
10'-0"
10'-0"
18 CB47 = SIZE
A = 13.8 IN²
Sx = 85.4 IN³
7.5"
18.0"
.32"
.55"

CHECK MAIN BEAMS

15 LT CRANE

KING PIN SUPPORT FRAMING

W_x LOADING

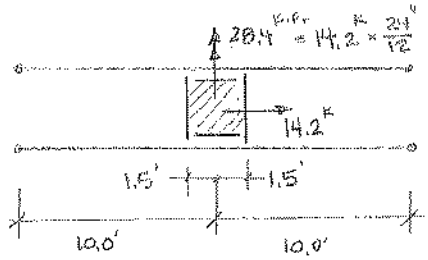

PLAN

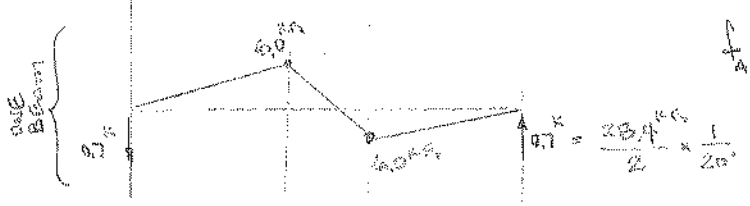

$f_b = \frac{6.0^{K\text{-}FT} \times 12}{85.4^{IN^3}} = 0.8^{KSI}$

$f_A = \frac{14.2/4}{13.8} = 0.3^{KSI}$

D & L STRESSES ARE SMALL.

W_z LOADING

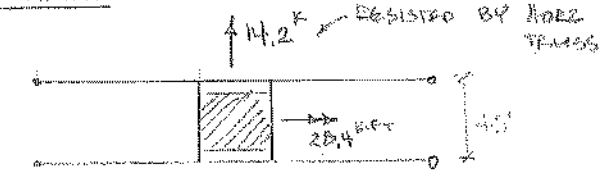

PLAN

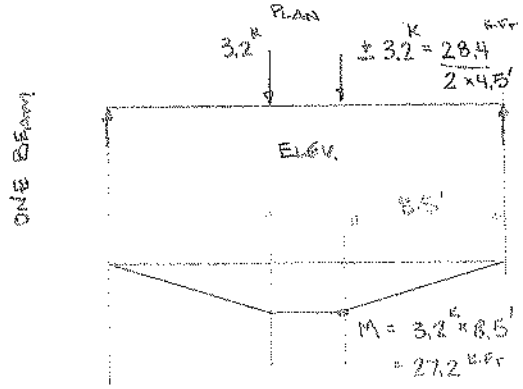

$f_b = \frac{27.2^{K\text{-}FT} \times 12''}{85.4^{IN^3}} = 3.8^{KSI}$ OK

13

15LT Crane Analysis

King Pin Support Framing

King Pin Local Support Channels

W_z LOADING CONDITION

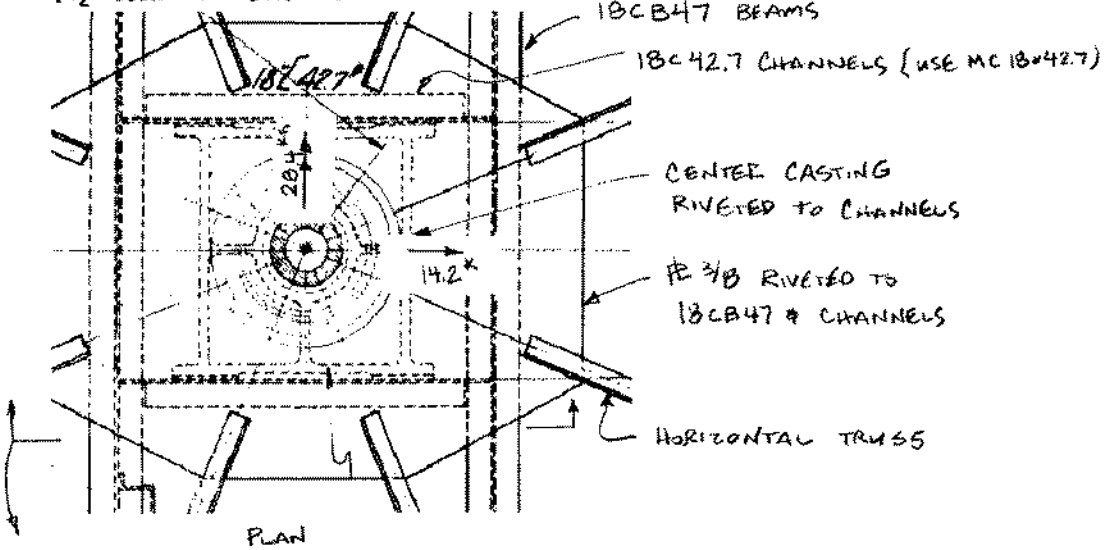

PLAN

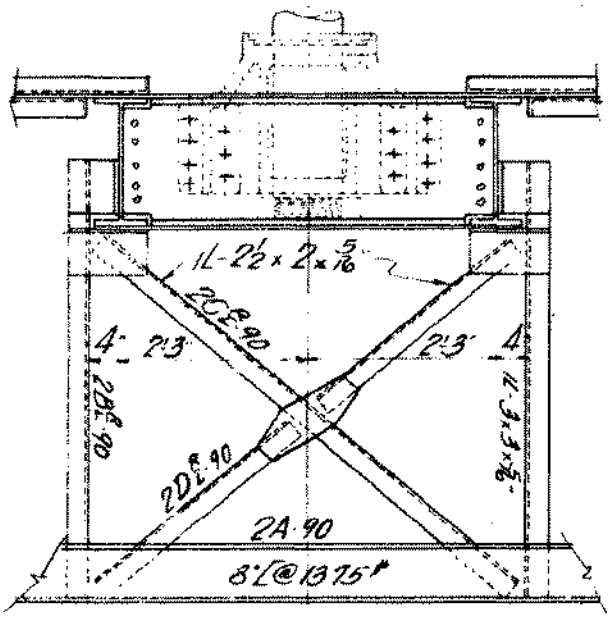

SECTION

CHANNELS

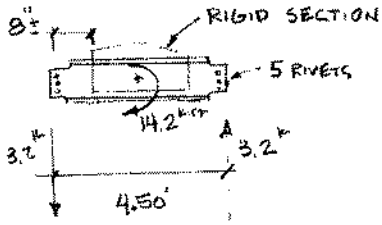

$f_v = \frac{3.2^k \times 1.5}{16" \times .45"} = .7^{ksi}$ OK

& (2) 1" COPES

$f_b = \frac{3.2^k \times 8"}{61.5 \text{ in}^3} = .4^{ksi}$ OK

W_x LOADING CONDITION IS SIMILAR & DOES NOT CONTROL.

∴ CHANNELS & CONNECTIONS ARE ADEQUATE.

REF. SHT PW# 36257 (SHT C-2685-12). SEE PW# 36334 (C-2685-89)

14

18" BEAMS

REFERENCES; SEE COLUMN (1) AND PAGE 4

5	15	17	1, 2, 13, 14,
S12-1922	C1913	C1921	18, 19, 20, 21
S15-1924	C1915	C1923	See Page 58
7	16	24	3, 9, 10, 12
S16-1925	C1916	IL1914	See Page 59
S18-1926	C1917	IL1925	
	C1919		
	C1920		

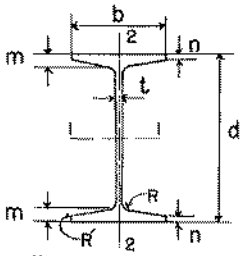

*Computed

SECT. NO. OR NOM. SIZE	COL. (1)	WEIGHT PER FOOT Lb.	AREA Sq. In.	DEPTH d In.	FLANGE WIDTH b In.	WEB THICK t In.	DIMENSIONS m In.	n In.	R In.	R' In.	SLOPE INSIDE FLANGE %	AXIS 1—1 I In.⁴	S In.³	r In.	AXIS 2—2 I In.⁴	S In.³	r In.
B18 18X7½	12	57.0	16.81	18.250	7.560	.380	.830	.530	.40	0	8⅓*	953.2	104.5	7.53	44.0	11.6	1.62
CB18IN 18X7½	19	57.0	16.76	18.250	7.558	.378	.675	.675	.50	0	0	952.0	104.3	7.54	48.7	12.9	1.70
18WF B18 18X7½	14	55.0	16.19	18.120	7.532	.390	.630†		.40	0	5.0	889.9	98.2	7.41	42.0	11.1	1.61
18WF CB18I 18X7½	21	55.0	16.19	18.120	7.532	.390	.630	.630	.43	0	0	889.9	98.2	7.41	42.0	11.1	1.61
B18	10	54.5	16.06	18.120	7.540	.370	.794	.495	.40	0	8⅓*	896.1	98.9	7.47	41.1	10.9	1.60
B18	7	54.5	15.95	18.120	7.540	.370	.794	.495	.40	0	8⅓*	888.5	98.1	7.46	41.1	10.9	1.60
B18	5	54.5	15.87	18.000	7.590	.410	.753	.430	.40	0	9.0*	842.0	93.6	7.28	37.7	9.9	1.54
B18	2	54.0	15.87	18.000	7.590	.410	.753	.430	.40	0	9.0*	842.0	93.6	7.28	37.7	9.9*	1.54
B18	1	52.5	15.40	18.000	7.370	.375	.837	.400	.41	0	12.5*	832.9	92.5	7.35	34.4	9.3*	1.49
B18	10	52.0	15.34	18.060	7.525	.355	.764	.465	.40	0	8⅓*	851.7	94.3	7.45	38.7	10.3	1.59
CB18I 18X7½	18	52.0	15.30	18.114	7.534	.354	.607	.607	.50	0	0	855.1	94.4	7.48	43.3	11.5	1.68
CB18IN 18X7½	19	52.0	15.29	18.120	7.531	.351	.610	.610	.50	0	0	857.3	94.6	7.49	43.5	11.6	1.69
B18 18X7½	12	52.0	15.29	18.120	7.530	.350	.765	.465	.40	0	8⅓*	857.1	94.6	7.49	38.8	10.3	1.59
B18	3	52.0	15.24	18.000	7.555	.375	.753	.430	.40	0	9.0*	825.0	91.7	7.36	37.1	9.8	1.56
B18	7	52.0	15.22	18.060	7.525	.355	.764	.465	.40	0	8⅓*	844.1	93.5	7.45	38.7	10.3	1.59
CB18I 18X7½	16	51.0	15.00	18.024	7.555	.375	.562	.562	.50	0	0	810.0	89.9	7.35	40.5	10.7	1.64
18WF CB18I 18X7½	21	50.0	14.71	18.000	7.500	.358	.570	.570	.43	0	0	800.6	89.0	7.38	37.2	9.9	1.59
18WF B18 18X7½	14	50.0	14.71	18.000	7.500	.358	.570†		.40	0	5.0	800.6	89.0	7.38	37.2	9.9	1.59
B18 18X7½	12	49.0	14.47	18.060	7.510	.330	.735	.435	.40	0	8⅓*	810.3	89.7	7.48	36.3	9.7	1.56
B18	10	49.0	14.44	18.000	7.500	.330	.734	.435	.40	0	8⅓*	802.8	89.2	7.46	36.1	9.6	1.58
CB18IN 18X7½	19	49.0	14.40	18.060	7.507	.327	.580	.580	.50	0	0	808.6	89.5	7.49	41.0	10.9	1.69
B18	7	49.0	14.32	18.000	7.500	.330	.734	.435	.40	0	8⅓*	795.3	88.4	7.45	36.1	9.6	1.59
B18	5	49.0	14.25	18.000	7.500	.320	.753	.430	.40	0	9.0*	798.3	88.7	7.48	36.2	9.7	1.59
B18	2	48.5	14.25	18.000	7.500	.320	.753	.430	.40	0	9.0*	798.3	88.7	7.48	36.2	9.7*	1.59
B18	1	48.5	14.23	18.000	7.300	.310	.837	.400	.41	0	12.5*	801.3	89.0	7.50	33.4	9.2*	1.53
B64	17	48.2	14.09	18.000	7.500	.380	.664	.340	.34	0	9.0*	737.1	81.9	7.23	30.0	8.0	1.46
B64	16	48.0	14.08	18.000	7.500	.380	.664	.340	.34	0	9.0*	737.1	81.9	7.23	30.0	8.0	1.46
B18	9	47.0	13.90	17.940	7.495	.325	.704	.405	.40	0	8⅓*	764.1	85.2	7.42	34.0	9.1	1.56
B18 18X7½	12	47.0	13.84	18.000	7.500	.320	.705	.405	.40	0	8⅓*	768.8	85.4	7.45	34.1	9.1	1.57
CB18IN 18X7½	19	47.0	13.82	18.000	7.500	.320	.550	.550	.50	0	0	768.6	85.4	7.46	38.7	10.3	1.67
CB18I 18X7½	18	47.0	13.82	18.000	7.500	.320	.550	.550	.50	0	0	768.6	85.4	7.46	38.7	10.3	1.67
18WF CB18I 18X7½	20	47.0	13.81	17.900	7.492	.350	.520	.520	.43	0	0	736.4	82.3	7.30	33.5	9.0	1.56
18WF B18 18X7½	13	47.0	13.81	17.900	7.492	.350	.520†		.40	0	5.0	736.4	82.3	7.30	33.5	9.0	1.56
B34	15	46.0	13.53	18.000	6.000	.322	.900	.427	.50	0	16⅔*	733.2	81.5	7.36	19.9	6.6	1.21
B23	24	46.0	13.34	18.000	6.000	.380	.730	.380	.38	0	12.5*	675.7	75.1	7.12	17.1	5.7	1.13

†Average thickness

136847

ATTACHMENT 10
Project Alternatives, Cost, Life Cycle Cost Analysis, Schedule

ATTACHMENT

Table of Contents

Attachment 10 – Project Alternatives, Cost, Life Cycle Cost Analysis, Schedule
- 10-1 – Mothball Alternative
  - 10-1-1 – Cost Details
  - 10-1-2 – Life Cycle Cost Analysis
  - 10-1-3 – Schedule Details
  - 10-1-4 – Alternative Details
- 10-2 – Demolition Alternative
  - 10-2-1 – Cost Details
  - 10-2-2 – Life Cycle Cost Analysis
  - 10-2-3 – Schedule Details
  - 10-2-4 – Alternative Details
- 10-3 – Cost Summary

10-1
Mothball Alternative

10-1-1
Cost Details

A--System Report
SUBMITTAL: FINAL
SOFTWARE VERSION: SUCCESS 5.X
REPORT REVISION: Nov. 5 2003
ESTIMATE SAVED AS: Norfolk Naval Shipyard - Hammerhead Crane Study - Mothbal

CONSTRUCTION CONTRACT:
DATABASE USED: RSM 2012
PRINTING DATE: 11 July 2013
Page No. 1

PROJECT: Hammerhead Crane Study - Mothball Option
PROJECT SITE: Norfolk Naval Shipyard
A/E NAME: STV Inc
PROJECT SIZE: 1.00 LS
CONSTRUCTION FUNDS AVAILABLE, DOLLARS: $1,500,000

ESTIMATOR:
CAT CODE:
UIC:
PROJECT #:
DATE OF ESTIMATE: 07/11/2013
BID DATE:

WBS CODE	DESCRIPTION	COST/WBS BASED ON 1 LS	COST/ WBS UNIT	TOTAL MARKED UP COSTS MATL	LABOR	EQUIP	UNIT COST	TOTAL
	HAMMERHEAD CRANE STUDY - NORFOLK NAVAL SHIPYARD, PROJECT TOTALS							**233,000**
	PROJECT LEVEL NOTE: This estimate excludes any work to remove and salvage crane equipment							
	PROJECT SUBTOTALS			27,275	203,336	2,562	0	233,173
MOTHBALL ALTERNATIVE				**27,275**	**203,336**	**2,562**	**0**	**233,173**
	---PREPARATION RECOMMENDATIONS			27,275	203,336	2,562	0	233,173
	---DISTRIBUTED COSTS			1,453	113,058	0	0	114,511
	> ***Contains Distributed Levels*							

Distributed costs are included in cost of the Preparation Recommendations. See individual Attachment 10-1, E-Detail Report Unburdened, individual sub/crew.

B--System Report
SUBMITTAL: FINAL
SOFTWARE VERSION: SUCCESS 5.X
REPORT REVISION: Nov. 5 2003
ESTIMATE SAVED AS: Norfolk Naval Shipyard - Hammerhead Crane Study - M

CONSTRUCTION CONTRACT:
DATABASE USED: RSM 2012
PRINTING DATE: 11 July 2013

PROJECT: Hammerhead Crane Study - Mothball Option
PROJECT SITE: Norfolk Naval Shipyard
A/E NAME: STV Inc
PROJECT SIZE: 1.00 LS
CONSTRUCTION FUNDS AVAILABLE, DOLLARS: $1,500,000

ESTIMATOR:
CAT CODE:
UIC:
PROJECT #:
DATE OF ESTIMATE: 07/11/2013
BID DATE:

WBS CODE	DESCRIPTION	COST/PROJECT UOM BASED ON 1 LS	COST/ WBS UNIT	TOTAL MARKED UP COSTS MATL	LABOR	EQUIP	UNIT COST	TOTAL
	HAMMERHEAD CRANE STUDY - NORFOLK NAVAL SHIPYARD, PROJECT TOTALS							**233,000**
	PROJECT NOTE: This estimate excludes any work to remove and salvage crane equipment							
	****PROJECT SUBTOTALS****			27,275	203,336	2,562	0	233,173
MOTHBALL ALTERNATIVE				***27,275***	***203,336***	***2,562***	***0***	***233,173***
-PREPARATION RECOMMENDATIONS				**27,275**	**203,336**	**2,562**	**0**	**233,173**
01	BOOM 350 LT CRANE			6,077	108,496	299	0	114,872
02	TOWER 350 LT CRANE			17,065	60,309	1,880	0	79,254
03	15 LT CRANE			4,133	34,530	384	0	39,048
-DISTRIBUTED COSTS				**1,453**	**113,058**	**0**	**0**	**114,511**
	This level is distributed							

D--Markup Report
SUBMITTAL: FINAL
SOFTWARE VERSION: SUCCESS 5.X
REPORT REVISION: Nov. 5 2003
ESTIMATE SAVED AS: Norfolk Naval Shipyard - Hammerhead Crane Study - Mothbal

CONSTRUCTION CONTRACT:
DATABASE USED: RSM 2012
PRINTING DATE: 07/11/13
PAGE NUMBER: 1

PROJECT: Hammerhead Crane Study - Mothball Option
PROJECT SITE: Norfolk Naval Shipyard
A/E NAME: STV Inc
PROJECT SIZE: 1.00 LS
CONSTRUCTION FUNDS AVAILABLE, DOLLARS: $1,500,000

ESTIMATOR:
CAT CODE:
UIC:
PROJECT #:
DATE OF ESTIMATE: 07/11/2013
BID DATE:

CONTRACTOR	DESCRIPTION	MATERIAL	LABOR	EQUIPMENT	UNIT COST
PRIME	**PRIME CONTRACTOR**				
	TAXES ON MATERIAL	5.00%	0.00%	0.00%	0.00%
	DESIGN CONTINGENCIES	20.00%	20.00%	20.00%	0.00%
	PRIME OVERHEAD	6.00%	6.00%	6.00%	6.00%
	PRIME PROFIT	7.50%	7.50%	7.50%	7.50%
	BOND	2.00%	2.00%	2.00%	2.00%
	ESCALATION	2.90%	2.90%	2.90%	0.00%
	COMPOSITE MARKUPS FOR PRIME				
	MATERIAL COMPOSITE MARKUP		**1.507**		
	LABOR COMPOSITE MARKUP		**1.435**		
	EQUIPMENT COMPOSITE MARKUP		**1.435**		
	UNIT COST (Sub Quote) COMPOSITE MARKUP		**1.162**		
ELEC	**ELECTRICAL SUBCONTRACTOR**				
	PRIME OVERHEAD ON SUBS WORK	4.00%	4.00%	4.00%	4.00%
	PRIME PROFIT ON SUBS WORK	6.50%	6.50%	6.50%	6.50%
	COMPOSITE MARKUPS FOR ELEC				
	MATERIAL COMPOSITE MARKUP		**1.108**		
	LABOR COMPOSITE MARKUP		**1.108**		
	EQUIPMENT COMPOSITE MARKUP		**1.108**		
	UNIT COST (Sub Quote) COMPOSITE MARKUP		**1.108**		

PROJECT: Hammerhead Crane Study - Mothball Option
PROJECT SITE: Norfolk Naval Shipyard
A/E NAME: STV Inc
PROJECT SIZE: 1.00 LS
CONSTRUCTION FUNDS AVAILABLE, DOLLARS: $1,500,000

ESTIMATOR:
CAT CODE:
UIC:
PROJECT #:
DATE OF ESTIMATE: 07/11/2013
BID DATE:

CODE	DESCRIPTION / SUB/CREW	QTY	UM	TOTAL COSTS MATERIAL	LABOR	EQUIPMENT	UNIT COST (SUB QUOTE)	TOTAL
01	**BOOM 350 LT CRANE**							
0101	**STRUCTURE**							
	01 BOOM 350 LT CRANE							
	0101 STRUCTURE *LEVEL CONTRACTOR ID APPLIED--PRIME*							
07 921 320 00	Seal joints & holes in slate vents, wire rope openings, & gaps in fiberglass			0.28	1.52	0.00	0.00	1.80
	paneling					**0**	**0**	**1,802**
RSMeans 2011 Master Unio NoSub/BRIC	0.029 hrs/unit 29 TOTAL HRS	**1,000**	**L.F.**	**280**	**1,522**			
05 052 115 19	Drilling drainage holes in steel, 7/8" diameter, incl bit & layout			0.19	1.68	0.00	0.00	1.87
RSMeans 2011 Master Unio NoSub/SSWK	0.037 hrs/unit	**4**	**Ea.**	**1**	**7**	**0**	**0**	**7**
05 011 051 62	Metal cleaning, steel surface treatment, 2.0 lb sand per S.F., commercial blast,			0.49	0.79	0.17	0.00	1.44
	loose scale, fine powder rust (SSPC-SP6)					**83**	**0**	**722**
RSMeans 2011 Master Unio NoSub/E11	0.027 hrs/unit 14 TOTAL HRS	**500**	**S.F.**	**245**	**394**			
09 971 010 46	Paints & Coatings, metal, ferrous, rust inhibitor, in 5 gallon lots			34.50	39.09	0.00	0.00	73.59
RSMeans 2011 Master Unio NoSub/PSST	1 hrs/unit 8 TOTAL HRS	**8**	**Gal.**	**276**	**313**	**0**	**0**	**589**
11 131 910 58	Safety restraints, installed at spud lock			200.00	185.10	27.25	0.00	412.35
RSMeans 2011 Master Unio NoSub/E16	4 hrs/unit 4 TOTAL HRS	**1**	**Ea.**	**200**	**185**	**27**	**0**	**412**
	Subtotal Direct Costs			1,002	2,421	110	0	3,532
	Distributions			87	9,562	$0	$0	9,650
	Prime Contractor Markups			552	5,215	48	0	5,815
	TOTAL 0101 STRUCTURE	55	HRS	1,641	17,197	158	0	18,997
0102	**MECHANICAL**							
	01 BOOM 350 LT CRANE							
	0102 MECHANICAL *LEVEL CONTRACTOR ID APPLIED--PRIME*							
05 151 660 31	Wire rope clamp, galvanized			5.43	23.14	0.00	0.00	28.57
RSMeans 2011 Master Unio NoSub/E17	0.5 hrs/unit 4 TOTAL HRS	**8**	**Ea.**	**43**	**185**	**0**	**0**	**229**
05 582 105 01	Eye/sling hook w/ hammerlock coupling, grade 80 for lifting, 15 Ton			345.00	92.55	0.00	0.00	437.55
RSMeans 2011 Master Unio NoSub/E17	2 hrs/unit 8 TOTAL HRS	**4**	**Ea.**	**1,380**	**370**	**0**	**0**	**1,750**
05 582 105 01	Come-alongs			85.00	46.27	0.00	0.00	131.28
RSMeans 2011 Master Unio NoSub/E17	1 hrs/unit 4 TOTAL HRS	**4**	**Ea.**	**340**	**185**	**0**	**0**	**525**
10 145 320 06	Signs, warning signs, reflectorized, 12" x 18", excludes posts			34.50	7.89	8.84	0.00	51.23
RSMeans 2011 Master Unio NoSub/B80	0.457 hrs/unit 5 TOTAL HRS	**10**	**Ea.**	**345**	**79**	**88**	**0**	**512**
05 151 650 08	Remove wire ropes at radius indicator system, 3/8" dia			0.00	2.13	0.00	0.00	2.13
RSMeans 2011 Master Unio NoSub/E17	0.046 hrs/unit 109 TOTAL HRS	**2,364**	**L.F.**	**0**	**5,032**	**0**	**0**	**5,032**
22 050 510 14	Selective demolition, water closet, incinerator type			0.00	47.98	0.00	0.00	47.98
RSMeans 2011 Master Unio NoSub/PLUM	1 hrs/unit 2 TOTAL HRS	**2**	**Ea.**	**0**	**96**	**0**	**0**	**96**
	Subtotal Direct Costs			2,108	5,947	88	0	8,144
	Distributions			184	23,495	$0	$0	23,679
	Prime Contractor Markups			1,162	12,813	38	0	14,014
	TOTAL 0102 MECHANICAL	131	HRS	3,455	42,255	127	0	45,837
0103	**ELECTRICAL**							
	01 BOOM 350 LT CRANE							
	0103 ELECTRICAL *LEVEL CONTRACTOR ID APPLIED--PRIME*							
22 050 510 12	Disconnect and make safe, electrical connections			0.00	633.93	0.00	0.00	633.93
RSMeans 2011 Master Unio ELEC/ELEC	16 hrs/unit 16 TOTAL HRS	**1**	**LS**	**0**	**634**	**0**	**0**	**634**
26 050 510 01	Remove 240 V AC line & conductors from slip rings and brush connection			0.00	39.62	0.00	0.00	39.62
RSMeans 2011 Master Unio ELEC/ELEC	1 hrs/unit 10 TOTAL HRS	**10**	**HR**	**0**	**396**	**0**	**0**	**396**
26 052 920 48	Butt splice connections to power electricl panels & bypass slip ring			13.60	7.92	0.00	0.00	21.52
RSMeans 2011 Master Unio ELEC/ELEC	0.2 hrs/unit 3 TOTAL HRS	**15**	**Ea.**	**204**	**119**	**0**	**0**	**323**
08 712 040 14	Install hasp & padlock at slip ring enclosure & access door			75.00	38.53	0.00	0.00	113.54
RSMeans 2011 Master Unio ELEC/CARP	1.25 hrs/unit 3 TOTAL HRS	**2**	**Ea.**	**150**	**77**	**0**	**0**	**227**
26 050 510 01	Remove festoon cabling system			0.00	39.62	0.00	0.00	39.62
RSMeans 2011 Master Unio ELEC/ELEC	1 hrs/unit 15 TOTAL HRS	**15**	**HR**	**0**	**594**	**0**	**0**	**594**
41 212 316 43	Remove Festoon Trolleys			0.00	46.27	0.00	0.00	46.28
RSMeans 2011 Master Unio ELEC/E17	1 hrs/unit 32 TOTAL HRS	**32**	**HR**	**0**	**1,481**	**0**	**0**	**1,481**
26 015 081 32	Lighting fixture, maintenance, remove and replace (reinstall), incl. remove,			0.00	79.24	0.00	0.00	79.24
	disconnect wire terminations, store, reinstall and reconnect wire terminations					**0**	**0**	**1,426**
RSMeans 2011 Master Unio ELEC/ELEC	2 hrs/unit 36 TOTAL HRS	**18**	**Ea.**	**0**	**1,426**			

CODE	DESCRIPTION / SUB/CREW	QTY	UM	TOTAL COSTS MATERIAL	LABOR	EQUIPMENT	UNIT COST (SUB QUOTE)	TOTAL
	01 BOOM 350 LT CRANE							
26 050 510 26	Remove existing floodlight fixtures			0.00	12.68	0.00	0.00	12.68
RSMeans 2011 Master Unio ELEC/ELEC2	0.32 hrs/unit 1 TOTAL HRS	**3**	**Ea.**	**0**	**38**	**0**	**0**	**38**
26 050 535 01	Circuit breakers, electrical demolition, remove			0.00	36.02	0.00	0.00	36.02
RSMeans 2011 Master Unio ELEC/ELEC	0.909 hrs/unit 4 TOTAL HRS	**4**	**Ea.**	**0**	**144**	**0**	**0**	**144**
26 050 520 70	Receptacle, 120 V, electrical demolition, remove			0.00	19.81	0.00	0.00	19.81
RSMeans 2011 Master Unio ELEC/ELEC	0.5 hrs/unit 2 TOTAL HRS	**4**	**Ea.**	**0**	**79**	**0**	**0**	**79**
26 272 620 24	Duplex receptacle, ground fault interrupting, 20 amp			38.00	11.73	0.00	0.00	49.73
RSMeans 2011 Master Unio ELEC/ELEC	0.296 hrs/unit 1 TOTAL HRS	**4**	**Ea.**	**152**	**47**	**0**	**0**	**199**
26 015 081 32	Lighting fixture, inspect & repair, reinstall and reconnect wire terminations			0.00	59.43	0.00	0.00	59.43
RSMeans 2011 Master Unio ELEC/ELEC	1.5 hrs/unit 18 TOTAL HRS	**12**	**Ea.**	**0**	**713**	**0**	**0**	**713**
26 015 081 32	Aircraft Warning Lights, inspect & repair, reinstall and reconnect wire terminations			0.00	158.48	0.00	0.00	158.48
RSMeans 2011 Master Unio ELEC/ELEC	4 hrs/unit 12 TOTAL HRS	**3**	**Ea.**	**0**	**475**	**0**	**0**	**475**
10 145 320 06	Signs, warning signs, reflectorized, 12" x 18", excludes posts			34.50	7.89	8.84	0.00	51.23
RSMeans 2011 Master Unio ELEC/B80	0.457 hrs/unit	**1**	**Ea.**	**35**	**8**	**9**	**0**	**51**
	Subtotal Direct Costs			541	6,232	9	0	6,782
	Subcontractor Markups			58	671	1	0	730
	Distributions			52	27,269	$0	$0	27,321
	Prime Contractor Markups			330	14,871	4	0	15,206
	TOTAL 0103 ELECTRICAL	153	HRS	981	49,043	14	0	50,038

02 TOWER 350 LT CRANE

0201 ELEVATOR

	02 TOWER 350 LT CRANE							
	0201 ELEVATOR *LEVEL CONTRACTOR ID APPLIED--PRIME*							
14 212 310 16	Elevator, inspect & return to service			0.00	3303.90	0.00	0.00	3,303.90
RSMeans 2011 Master Unio NoSub/ELEV2	80 hrs/unit 80 TOTAL HRS	**1**	**LS**	**0**	**3,304**	**0**	**0**	**3,304**
	Subtotal Direct Costs			0	3,304	0	0	3,304
	Distributions			0	13,052	$0	$0	13,052
	Prime Contractor Markups			0	7,118	0	0	7,118
	TOTAL 0201 ELEVATOR	80	HRS	0	23,473	0	0	23,473

	02 TOWER 350 LT CRANE							
	STAIR & WALKWAY ACCESS *LEVEL CONTRACTOR ID APPLIED--PRIME*							
05 050 510 03	Selective metals demolition, steel framing			0.00	469.53	517.50	0.00	987.03
RSMeans 2011 Master Unio NoSub/E19	12 hrs/unit 12 TOTAL HRS	**1**	**Ton**	**0**	**470**	**518**	**0**	**987**
05 050 510 03	Selective metals demolition, steel plate			0.00	1.96	2.16	0.00	4.11
RSMeans 2011 Master Unio NoSub/E19	0.05 hrs/unit 8 TOTAL HRS	**150**	**S.F.**	**0**	**293**	**323**	**0**	**617**
05 122 377 29	Structural steel, framing			2875.00	507.88	177.41	0.00	3,560.29
RSMeans 2011 Master Unio NoSub/E6	12 hrs/unit 12 TOTAL HRS	**1**	**Ton**	**2,875**	**508**	**177**	**0**	**3,560**
05 521 350 09	Railing, pipe, steel, welded to existing, primed, 1-1/4" dia, shop fabricated			12.70	6.87	0.51	0.00	20.08
RSMeans 2011 Master Unio NoSub/E4	0.15 hrs/unit 38 TOTAL HRS	**250**	**L.F.**	**3,175**	**1,717**	**128**	**0**	**5,019**
05 541 320 03	Floor plate, steel checkered plate1/4" T, field fabricated			29.10	14.65	1.09	0.00	44.84
RSMeans 2011 Master Unio NoSub/E4	0.32 hrs/unit 48 TOTAL HRS	**150**	**S.F.**	**4,365**	**2,197**	**164**	**0**	**6,726**
	Subtotal Direct Costs			10,415	5,185	1,310	0	16,909
	Distributions			909	20,481	$0	$0	21,391
	Prime Contractor Markups			5,741	11,170	570	0	17,481
	TOTAL STAIR & WALKWAY ACCESS	117	HRS	17,065	36,836	1,880	0	55,780

03 15 LT CRANE

0301 STRUCTURE

	0301 STRUCTURE *LEVEL CONTRACTOR ID APPLIED--PRIME*							
05 582 105 00	Lashing, steel chain, grade 80, 7/8"			4850.00	4172.80	2587.60	0.00	11,610.40
RSMeans 2011 Master Unio NoSub/E18	100 hrs/unit 5 TOTAL HRS	**0.05**	**C.L.**	**243**	**209**	**129**	**0**	**581**
05 011 051 62	Metal cleaning, steel surface treatment, 2.0 lb sand per S.F., commercial blast, loose scale, fine powder rust (SSPC-SP6)			0.49	0.79	0.17	0.00	1.45
RSMeans 2011 Master Unio NoSub/E11	0.027 hrs/unit	**10**	**S.F.**	**5**	**8**	**2**	**0**	**14**
09 971 010 46	Paints & Coatings, metal, ferrous, rust inhibitor, in 5 gallon lots			34.50	39.09	0.00	0.00	73.59
RSMeans 2011 Master Unio NoSub/PSST	1 hrs/unit 1 TOTAL HRS	**1**	**Gal.**	**35**	**39**	**0**	**0**	**74**

CODE	DESCRIPTION / SUB/CREW	QTY	UM	TOTAL COSTS MATERIAL	LABOR	EQUIPMENT	UNIT COST (SUB QUOTE)	TOTAL
05 052 115 19	Drilling drainage holes in steel, 7/8" diameter, incl bit & layout			0.19	1.68	0.00	0.00	1.87
RSMeans 2011 Master Unio NoSub/SSWK	0.037 hrs/unit	**6**	**Ea.**	**1**	**10**	**0**	**0**	**11**
07 921 320 00	Seal joints & holes in slate vents, wire rope openings, & gaps in fiberglass paneling			0.28	1.52	0.00	0.00	1.80
						0	**0**	**450**
RSMeans 2011 Master Unio NoSub/BRIC	0.029 hrs/unit 7 TOTAL HRS	**250**	**L.F.**	**70**	**380**			
05 541 320 03	Floor plate, 1/4" T, field fabricated			9.10	14.65	1.09	0.00	24.84
RSMeans 2011 Master Unio NoSub/E4	0.32 hrs/unit 16 TOTAL HRS	**50**	**S.F.**	**455**	**732**	**55**	**0**	**1,242**
11 131 910 58	Safety restraints, installed at spud lock			200.00	185.10	27.25	0.00	412.35
RSMeans 2011 Master Unio NoSub/E16	4 hrs/unit 8 TOTAL HRS	**2**	**Ea.**	**400**	**370**	**55**	**0**	**825**
	Subtotal Direct Costs			1,208	1,749	240	0	3,197
	Distributions			105	6,908	$0	$0	7,014
	Prime Contractor Markups			666	3,767	104	0	4,538
	TOTAL 0301 STRUCTURE	38	HRS	1,979	12,424	344	0	14,748

0302 MECHANICAL

03 15 LT CRANE

0302 MECHANICAL *LEVEL CONTRACTOR ID APPLIED--PRIME*

05 151 660 31	Wire rope clamp, galvanized			5.43	23.14	0.00	0.00	28.57
RSMeans 2011 Master Unio NoSub/E17	0.5 hrs/unit 2 TOTAL HRS	**4**	**Ea.**	**22**	**93**	**0**	**0**	**114**
05 582 105 01	Eye/sling hook w/ hammerlock coupling, grade 80 for lifting, 15 Ton			345.00	92.55	0.00	0.00	437.55
RSMeans 2011 Master Unio NoSub/E17	2 hrs/unit 4 TOTAL HRS	**2**	**Ea.**	**690**	**185**	**0**	**0**	**875**
05 582 105 01	Come-alongs			85.00	46.27	0.00	0.00	131.28
RSMeans 2011 Master Unio NoSub/E17	1 hrs/unit 2 TOTAL HRS	**2**	**Ea.**	**170**	**93**	**0**	**0**	**263**
10 145 320 06	Signs, warning signs, reflectorized, 12" x 18", excludes posts			34.50	7.89	8.84	0.00	51.23
RSMeans 2011 Master Unio NoSub/B80	0.457 hrs/unit 1 TOTAL HRS	**2**	**Ea.**	**69**	**16**	**18**	**0**	**102**
	Subtotal Direct Costs			951	386	18	0	1,354
	Distributions			83	1,525	$0	$0	1,608
	Prime Contractor Markups			524	832	8	0	1,363
	TOTAL 0302 MECHANICAL	9	HRS	1,558	2,742	25	0	4,325

0303 ELECTRICAL

03 15 LT CRANE

0303 ELECTRICAL *LEVEL CONTRACTOR ID APPLIED--PRIME*

41 212 316 43	Remove Festoon Trolleys			0.00	46.28	0.00	0.00	46.28
RSMeans 2011 Master Unio ELEC/E17	1 hrs/unit 16 TOTAL HRS	**16**	**HR**	**0**	**740**	**0**	**0**	**740**
08 712 040 14	Install hasp & padlock at slip ring enclosure & access door			75.00	38.53	0.00	0.00	113.54
RSMeans 2011 Master Unio ELEC/CARP	1.25 hrs/unit 3 TOTAL HRS	**2**	**Ea.**	**150**	**77**	**0**	**0**	**227**
26 050 535 01	Circuit breakers, electrical demolition, remove			0.00	36.02	0.00	0.00	36.02
RSMeans 2011 Master Unio ELEC/ELEC	0.909 hrs/unit 6 TOTAL HRS	**7**	**Ea.**	**0**	**252**	**0**	**0**	**252**
26 015 081 32	Aircraft Warning Lights, inspect & repair, reinstall and reconnect wire terminations			0.00	158.48	0.00	0.00	158.48
						0	**0**	**158**
RSMeans 2011 Master Unio ELEC/ELEC	4 hrs/unit 4 TOTAL HRS	**1**	**Ea.**	**0**	**158**			
10 145 320 06	Signs, warning signs, reflectorized, 12" x 18", excludes posts			34.50	7.89	8.84	0.00	51.23
RSMeans 2011 Master Unio ELEC/B80	0.457 hrs/unit	**1**	**Ea.**	**35**	**8**	**9**	**0**	**51**
26 050 510 26	Remove existing floodlight fixtures			0.00	12.68	0.00	0.00	12.68
RSMeans 2011 Master Unio ELEC/ELEC2	0.32 hrs/unit	**1**	**Ea.**	**0**	**13**	**0**	**0**	**13**
26 015 081 32	Lighting fixture, inspect & repair, reinstall and reconnect wire terminations			0.00	59.43	0.00	0.00	59.43
RSMeans 2011 Master Unio ELEC/ELEC	1.5 hrs/unit 6 TOTAL HRS	**4**	**Ea.**	**0**	**238**	**0**	**0**	**238**
26 050 520 70	Receptacle, 120 V, electrical demolition, remove			0.00	19.81	0.00	0.00	19.81
RSMeans 2011 Master Unio ELEC/ELEC	0.5 hrs/unit 1 TOTAL HRS	**2**	**Ea.**	**0**	**40**	**0**	**0**	**40**
26 272 620 24	Duplex receptacle, ground fault interrupting, 20 amp			38.00	11.73	0.00	0.00	49.73
RSMeans 2011 Master Unio ELEC/ELEC	0.296 hrs/unit 1 TOTAL HRS	**2**	**Ea.**	**76**	**23**	**0**	**0**	**99**
22 050 510 12	Disconnect and make safe, electrical connections			0.00	633.93	0.00	0.00	633.93
RSMeans 2011 Master Unio ELEC/ELEC	16 hrs/unit 16 TOTAL HRS	**1**	**LS**	**0**	**634**	**0**	**0**	**634**
26 050 510 01	Remove 240 V AC line & conductors from slip rings and brush connection			0.00	39.62	0.00	0.00	39.62
RSMeans 2011 Master Unio ELEC/ELEC	1 hrs/unit 6 TOTAL HRS	**6**	**HR**	**0**	**238**	**0**	**0**	**238**
26 052 920 48	Butt splice connections to power electricl panels & bypass slip ring			13.60	7.92	0.00	0.00	21.52
RSMeans 2011 Master Unio ELEC/ELEC	0.2 hrs/unit 1 TOTAL HRS	**5**	**Ea.**	**68**	**40**	**0**	**0**	**108**
	Subtotal Direct Costs			329	2,461	9	0	2,798
	Subcontractor Markups			35	265	1	0	301
	Distributions			32	10,767	$0	$0	10,798
	Prime Contractor Markups			201	5,872	4	0	6,077
	TOTAL 0303 ELECTRICAL	60	HRS	596	19,364	14	0	19,974

CODE	DESCRIPTION / SUB/CREW	QTY	UM	TOTAL COSTS MATERIAL	LABOR	EQUIPMENT	UNIT COST (SUB QUOTE)	TOTAL
77	**ITEMIZED FIELD OVERHEAD/QUALITY CONTROL**							
7701	**FIELD OVERHEAD**							
	770101 FIELD OVERHEAD, DETAIL ITEMS							
	This Level Is Distributed							
01 511 350 08	Temporary electrical power equipment (pro-rated per job), connections,			95.00	158.48	0.00	0.00	253.48
	manlift,double					**0**	**0**	**253**
RSMeans 2011 Master Unio NoSub/ELEC	4 hrs/unit 4 TOTAL HRS	**1**	**Ea.**	**95**	**158**			
01 311 320 02	Field personnel, superintendent, average			0.00	1925.00	0.00	0.00	1,925.00
RSMeans 2011 Master Unio NoSub/NoCrew		**24**	**Week**	**0**	**46,200**	**0**	**0**	**46,200**
01 311 320 02	Field personnel, project manager, average			0.00	2075.00	0.00	0.00	2,075.00
RSMeans 2011 Master Unio NoSub/NoCrew		**12**	**Week**	**0**	**24,900**	**0**	**0**	**24,900**
01 311 320 01	Field personnel, field engineer, average			0.00	1265.00	0.00	0.00	1,265.00
RSMeans 2011 Master Unio NoSub/NoCrew		**24**	**Week**	**0**	**30,360**	**0**	**0**	**30,360**
01 521 320 03	Office Trailer, furnished, rent per month, 32' x 8', excl. hookups			193.00	0.00	0.00	0.00	193.00
RSMeans 2011 Master Unio NoSub/NoCrew		**4**	**Ea.**	**772**	**0**	**0**	**0**	**772**
01 521 320 12	Storage Boxes, rent per month, 20' x 8'			71.50	0.00	0.00	0.00	71.50
RSMeans 2011 Master Unio NoSub/NoCrew		**4**	**Ea.**	**286**	**0**	**0**	**0**	**286**
02 411 923 09	Rubbish handling, dumpster, alternate pricing method, rent per month, average			75.00	0.00	0.00	0.00	75.00
	for all sizes, includes one dump per week, cost to be added to demolition cost.					**0**	**0**	**300**
RSMeans 2011 Master Unio NoSub/NoCrew		**4**	**Ea.**	**300**	**0**			
	Preliminary Engineering			0.00	11440.00	0.00	0.00	11,440.00
NoSub/NoCrew		**1**	**LSUM**	**0**	**11,440**	**0**	**0**	**11,440**
	Subtotal Direct Costs			1,453	113,058	0	0	114,511
	TOTAL 770101 FIELD OVERHEAD, DETAIL ITEMS	4	HRS	1,453	113,058	0	0	114,511

THIS WBS CODE DOES NOT FOLLOW TRI-SERVICE NUMBERING SYSTEM. MODIFY CODE TO MATCH EXISTING WBS, OR USE THE 77 XX 9? or 77 XX 8? NUMBERING CONVENTION

SUBTOTAL 7701 FIELD OVERHEAD			1,453	113,058	0	0	114,511
MARKUP			*1.000*	*1.000*	*0.000*	*0.000*	*1.000*
TOTAL 7701 FIELD OVERHEAD			1,453	113,058	0	0	114,511
SUBTOTAL 77 ITEMIZED FIELD OVERHEAD/QUALITY CONTROL			1,453	113,058	0	0	114,511
MARKUP			*1.000*	*1.000*	*0.000*	*0.000*	*1.000*
TOTAL 77 ITEMIZED FIELD OVERHEAD/QUALITY C			**1,453**	**113,058**	**0**	**0**	**114,511**

Material = 11.22% OF PROJECT COST Labor =87.67% OF PROJECT COST Equipment = 1.11% OF PROJECT COST UCSubQuote =0.00% OF PROJECT COST
20.14%OF PROJECT PERFORMED BY SUBCONTRACTORS BASED ON % OF WORK VALUE 62 DETAIL LINE ITEMS

Cost of Engineering and National Environmental Policy Act Support
Mothball Alternative

NEPA Support

	Hours	Labor Rate	Cost
Historic Preservation Specialist	640	$48.00	$30,720.00
Structural Engineer	64	$60.00	$3,840.00
Crane / Machinery Engineer	64	$65.00	$4,160.00
Technical Writer	280	$45.00	$12,600.00
Technician	160	$28.00	$4,480.00
Project Manager	180	$61.00	$10,980.00
Direct Labor Cost			$66,780.00
Overhead On Direct Labor 150%			$100,170.00
Subtotal			$166,950.00
Profit 10%			$16,695.00
Direct Costs			
Travel		$7,000.00	
Printing		$5,000.00	
Presentation Supplies		$500.00	
Subtotal Direct Costs			$12,500.00
NEPA Support Mothball Alternative			$196,145.00

Preliminary Design, Technical RFP Sections, Technical Evaluation Factors

	Hours	Labor Rate	Cost
Architect	24	$54.00	$1,296.00
Structural Engineer	96	$60.00	$5,760.00
Crane / Machinery Engineer	80	$65.00	$5,200.00
Civil / Site Engineer	48	$53.00	$2,544.00
HVAC Engineer	32	$53.00	$1,696.00
Plumbing / Fire Protection Engineer	32	$62.00	$1,984.00
Environmenta l Engineer	48	$53.00	$2,544.00
Estimator	40	$49.00	$1,960.00
Scheduler	24	$42.00	$1,008.00
Technical Writer	40	$45.00	$1,800.00
Technician	64	$28.00	$1,792.00
Project Manager	80	$61.00	$4,880.00
Direct Labor Cost			$32,464.00

	Overhead On Direct Labor 150%		$48,696.00
	Subtotal		$81,160.00
	Profit 10%		$8,116.00
Direct Costs			
	Travel	$4,000.00	
	Printing	$12,000.00	
	Presentation Supplies	$0.00	
	Subtotal Direct Costs		$16,000.00
	Pre-Solicitation Engineering		$105,276.00
Total Engineering and NEPA Support-Mothball			$301,421.00

A--System Report
SUBMITTAL: FINAL
SOFTWARE VERSION: SUCCESS 5.X
REPORT REVISION: Nov. 5 2003
ESTIMATE SAVED AS: Norfolk Naval Shipyard - Hammerhead Crane Study - Mainten

CONSTRUCTION CONTRACT:
DATABASE USED: RSM 2012
PRINTING DATE: 12 June 2013
Page No. 1

PROJECT: Hammerhead Crane Study - Mothball Option
PROJECT SITE: Norfolk Naval Shipyard
A/E NAME: STV Inc
PROJECT SIZE: 1.00 LS
CONSTRUCTION FUNDS AVAILABLE, DOLLARS: $15,000

ESTIMATOR:
CAT CODE:
UIC:
PROJECT #:
DATE OF ESTIMATE: 06/11/2013
BID DATE:

WBS CODE	DESCRIPTION	COST/WBS BASED ON 1LS	COST/ WBS UNIT	TOTAL MARKED UP COSTS MATL	LABOR	EQUIP	UNIT COST	TOTAL
	HAMMERHEAD CRANE STUDY - NORFOLK NAVAL SHIPYARD, PROJECT TOTALS							**15,000**
	PROJECT LEVEL NOTE: Davis Bacon Wages Norfolk 01/2012							
	PROJECT SUBTOTALS			6,240	8,680	0	0	14,920
MOTHBALL ALTERNATIVE				**6,240**	**8,680**	**0**	**0**	**14,920**
	---MAINTENANCE RECOMMENDATIONS			6,240	8,680	0	0	14,920

**** Assuming all inspections & maintenance on a schedule of once per year for a total of 20 years*

B--System Report
SUBMITTAL: FINAL
SOFTWARE VERSION: SUCCESS 5.X
REPORT REVISION: Nov. 5 2003
ESTIMATE SAVED AS: Norfolk Naval Shipyard - Hammerhead Crane Study - M

CONSTRUCTION CONTRACT:
DATABASE USED: RSM 2012
PRINTING DATE: 12 June 2013

PROJECT: Hammerhead Crane Study - Mothball Option
PROJECT SITE: Norfolk Naval Shipyard
A/E NAME: STV Inc
PROJECT SIZE: 1.00 LS
CONSTRUCTION FUNDS AVAILABLE, DOLLARS: $15,000

ESTIMATOR:
CAT CODE:
UIC:
PROJECT #:
DATE OF ESTIMATE: 06/11/2013
BID DATE:

WBS CODE	DESCRIPTION	COST/PROJECT UOM BASED ON 1 LS	COST/ WBS UNIT	TOTAL MARKED UP COSTS MATL	LABOR	EQUIP	UNIT COST	TOTAL
	HAMMERHEAD CRANE STUDY - NORFOLK NAVAL SHIPYARD, PROJECT TOTALS							**15,000**
	PROJECT NOTE: Davis Bacon Wages Norfolk 01/2012							
	****PROJECT SUBTOTALS****			6,240	8,680	0	0	14,920
MOTHBALL ALTERNATIVE				***6,240***	***8,680***	***0***	***0***	***14,920***
-MAINTENANCE RECOMMENDATIONS				**6,240**	**8,680**	**0**	**0**	**14,920**
	*** Assuming all inspections & maintenance on a schedule of once per year for a total of 20 years*							
01	BOOM 350 LT CRANE			3,014	4,110	0	0	7,124
02	15 LT CRANE			2,260	2,162	0	0	4,422
03	TOWER			0	973	0	0	973
04	OVERALL			966	1,436	0	0	2,402

D--Markup Report
SUBMITTAL: FINAL
SOFTWARE VERSION: SUCCESS 5.X
REPORT REVISION: Nov. 5 2003
ESTIMATE SAVED AS: Norfolk Naval Shipyard - Hammerhead Crane Study - Mainten

CONSTRUCTION CONTRACT:
DATABASE USED: RSM 2012
PRINTING DATE: 06/12/13
PAGE NUMBER: 1

PROJECT: Hammerhead Crane Study - Mothball Option
PROJECT SITE: Norfolk Naval Shipyard
A/E NAME: STV Inc
PROJECT SIZE: 1.00 LS
CONSTRUCTION FUNDS AVAILABLE, DOLLARS: $15,000

ESTIMATOR:
CAT CODE:
UIC:
PROJECT #:
DATE OF ESTIMATE: 06/11/2013
BID DATE:

CONTRACTOR	DESCRIPTION	MATERIAL	LABOR	EQUIPMENT	UNIT COST
PRIME	**PRIME CONTRACTOR**				
	TAXES ON MATERIAL	5.00%	0.00%	0.00%	0.00%
	DESIGN CONTINGENCIES	20.00%	20.00%	20.00%	0.00%
	PRIME OVERHEAD	6.00%	6.00%	6.00%	6.00%
	PRIME PROFIT	7.50%	7.50%	7.50%	7.50%
	BOND	2.00%	2.00%	2.00%	2.00%
	ESCALATION	2.90%	2.90%	2.90%	0.00%
	COMPOSITE MARKUPS FOR PRIME				
	MATERIAL COMPOSITE MARKUP		**1.507**		
	LABOR COMPOSITE MARKUP		**1.435**		
	EQUIPMENT COMPOSITE MARKUP		**1.435**		
	UNIT COST (Sub Quote) COMPOSITE MARKUP		**1.162**		
ELEC	**ELECTRICAL SUBCONTRACTOR**				
	PRIME OVERHEAD ON SUBS WORK	4.00%	4.00%	4.00%	4.00%
	PRIME PROFIT ON SUBS WORK	6.50%	6.50%	6.50%	6.50%
	COMPOSITE MARKUPS FOR ELEC				
	MATERIAL COMPOSITE MARKUP		**1.108**		
	LABOR COMPOSITE MARKUP		**1.108**		
	EQUIPMENT COMPOSITE MARKUP		**1.108**		
	UNIT COST (Sub Quote) COMPOSITE MARKUP		**1.108**		

PROJECT: Hammerhead Crane Study - Mothball Option
PROJECT SITE: Norfolk Naval Shipyard
A/E NAME: STV Inc
PROJECT SIZE: 1.00 LS
CONSTRUCTION FUNDS AVAILABLE, DOLLARS: $15,000

ESTIMATOR:
CAT CODE:
UIC:
PROJECT #:
DATE OF ESTIMATE: 06/11/2013
BID DATE:

CODE	DESCRIPTION / SUB/CREW	QTY	UM	TOTAL COSTS MATERIAL	LABOR	EQUIPMENT	UNIT COST (SUB QUOTE)	TOTAL
01	**BOOM 350 LT CRANE**							
	Assuming all inspections & maintenance on a schedule of once per year for a tota							
	0101 TYPICAL							
	01 BOOM 350 LT CRANE							
	0101 TYPICAL *LEVEL CONTRACTOR ID APPLIED--PRIME*							
	Maintain Safety Systems, Access, & Possible Loose Parts			2000.00	677.63	0.00	0.00	2,677.63
NoSub/SSWK	16 hrs/unit 16 TOTAL HRS	**1**	**Ea.**	**2,000**	**678**	**0**	**0**	**2,678**
	Elevator Inspection			0.00	660.78	0.00	0.00	660.78
NoSub/ELEV	16 hrs/unit 16 TOTAL HRS	**1**	**Ea.**	**0**	**661**	**0**	**0**	**661**
	Inspect & Clean Drainage System			0.00	357.56	0.00	0.00	357.56
NoSub/PLUM	8 hrs/unit 8 TOTAL HRS	**1**	**Ea.**	**0**	**358**	**0**	**0**	**358**
	Subtotal Direct Costs			2,000	1,696	0	0	3,696
	Prime Contractor Markups			1,014	738	0	0	1,752
	TOTAL 0101 TYPICAL	40	HRS	3,014	2,434	0	0	5,448
	0102 STRUCTURE							
	01 BOOM 350 LT CRANE							
	0102 STRUCTURE *LEVEL CONTRACTOR ID APPLIED--PRIME*							
	Visual Inspection of Machinery House, Operator's Cab, & Corrosion			0.00	338.82	0.00	0.00	338.82
NoSub/SSWK	8 hrs/unit 16 TOTAL HRS	**2**	**Ea.**	**0**	**678**	**0**	**0**	**678**
	Subtotal Direct Costs			0	678	0	0	678
	Prime Contractor Markups			0	295	0	0	295
	TOTAL 0102 STRUCTURE	16	HRS	0	973	0	0	973
	0103 MECHANICAL							
	01 BOOM 350 LT CRANE							
	0103 MECHANICAL *LEVEL CONTRACTOR ID APPLIED--PRIME*							
	Visual Inspection of Wire Ropes, Hoist Brakes, & Rotation Brakes			0.00	169.41	0.00	0.00	169.41
NoSub/SSWK	4 hrs/unit 8 TOTAL HRS	**2**	**Ea.**	**0**	**339**	**0**	**0**	**339**
	Subtotal Direct Costs			0	339	0	0	339
	Prime Contractor Markups			0	147	0	0	147
	TOTAL 0103 MECHANICAL	8	HRS	0	486	0	0	486
	0104 ELECTRICAL							
	01 BOOM 350 LT CRANE							
	0104 ELECTRICAL *LEVEL CONTRACTOR ID APPLIED--PRIME*							
	Visual Inspection Of Power Supply & Lighting			0.00	151.11	0.00	0.00	151.11
NoSub/ELEC	4 hrs/unit 4 TOTAL HRS	**1**	**Ea.**	**0**	**151**	**0**	**0**	**151**
	Subtotal Direct Costs			0	151	0	0	151
	Prime Contractor Markups			0	66	0	0	66
	TOTAL 0104 ELECTRICAL	4	HRS	0	217	0	0	217
02	**15 LT CRANE**							
	Assuming all inspections & maintenance on a schedule of once per year for a tota							
	0201 TYPICAL							
	02 15 LT CRANE							
	0201 TYPICAL *LEVEL CONTRACTOR ID APPLIED--PRIME*							
	Maintain Safety Systems, Access, & Possible Loose Parts			1500.00	338.81	0.00	0.00	1,838.81
NoSub/SSWK	8 hrs/unit 8 TOTAL HRS	**1**	**Ea**	**1,500**	**339**	**0**	**0**	**1,839**

CODE	DESCRIPTION / SUB/CREW	QTY	UM	TOTAL COSTS MATERIAL	LABOR	EQUIPMENT	UNIT COST (SUB QUOTE)	TOTAL
	02 15 LT CRANE							
	0201 TYPICAL *LEVEL CONTRACTOR ID APPLIED--PRIME*							
	Subtotal Direct Costs			1,500	339	0	0	1,839
	Prime Contractor Markups			760	147	0	0	908
	TOTAL 0201 TYPICAL	8	HRS	2,260	486	0	0	2,747
	0202 STRUCTURE							
	0202 STRUCTURE *LEVEL CONTRACTOR ID APPLIED--PRIME*							
	Visual Inspection of Machinery House, Operator's Cab, & Corrosion			0.00	338.82	0.00	0.00	338.82
NoSub/SSWK	8 hrs/unit 16 TOTAL HRS	**2**	**Ea.**	**0**	**678**	**0**	**0**	**678**
	Subtotal Direct Costs			0	678	0	0	678
	Prime Contractor Markups			0	295	0	0	295
	TOTAL 0202 STRUCTURE	16	HRS	0	973	0	0	973
	0203 MECHANICAL							
	02 15 LT CRANE							
	0203 MECHANICAL *LEVEL CONTRACTOR ID APPLIED--PRIME*							
	Visual Inspection of Wire Ropes, Hoist Brakes, & Rotation Brakes			0.00	169.41	0.00	0.00	169.41
NoSub/SSWK	4 hrs/unit 8 TOTAL HRS	**2**	**Ea.**	**0**	**339**	**0**	**0**	**339**
	Subtotal Direct Costs			0	339	0	0	339
	Prime Contractor Markups			0	147	0	0	147
	TOTAL 0203 MECHANICAL	8	HRS	0	486	0	0	486
	0204 ELECTRICAL							
	02 15 LT CRANE							
	0204 ELECTRICAL *LEVEL CONTRACTOR ID APPLIED--PRIME*							
	Visual Inspection Of Power Supply & Lighting			0.00	151.11	0.00	0.00	151.11
NoSub/ELEC	4 hrs/unit 4 TOTAL HRS	**1**	**Ea.**	**0**	**151**	**0**	**0**	**151**
	Subtotal Direct Costs			0	151	0	0	151
	Prime Contractor Markups			0	66	0	0	66
	TOTAL 0204 ELECTRICAL	4	HRS	0	217	0	0	217
	Assuming all inspections & maintenance on a schedule of once per year for a							
	03 TOWER *LEVEL CONTRACTOR ID APPLIED--PRIME*							
	Visual Inspection of Tower			0.00	677.63	0.00	0.00	677.63
NoSub/SSWK	16 hrs/unit 16 TOTAL HRS	**1**	**Ea.**	**0**	**678**	**0**	**0**	**678**
	Subtotal Direct Costs			0	678	0	0	678
	Prime Contractor Markups			0	295	0	0	295
	TOTAL 03 TOWER	16	HRS	0	973	0	0	973
	04 OVERALL *LEVEL CONTRACTOR ID APPLIED--PRIME*							
07 921 320 00	Seal joints & holes in slate vents, wire rope openings, & gaps in fiberglass paneling			0.28	1.25	0.00	0.00	1.53
RSMeans 2011 Master Unio NoSub/BRIC	0.029 hrs/unit 6 TOTAL HRS	**200**	**L.F.**	**56**	**250**	**0**	**0**	**306**
02 831 926 48	Removal of lead-based paint, by chemicals, per application, steel			1.17	1.50	0.00	0.00	2.67
RSMeans 2011 Master Unio NoSub/PORD	0.089 hrs/unit 45 TOTAL HRS	**500**	**S.F.**	**585**	**750**	**0**	**0**	**1,335**
	Subtotal Direct Costs			641	1,001	0	0	1,642
	Prime Contractor Markups			325	435	0	0	760
	TOTAL 04 OVERALL	50	HRS	966	1,436	0	0	2,402

Material = 40.64% OF PROJECT COST Labor =59.36% OF PROJECT COST Equipment = 0.00% OF PROJECT COST UCSubQuote =0.00% OF PROJECT COST
0.00%OF PROJECT PERFORMED BY SUBCONTRACTORS BASED ON % OF WORK VALUE 13 DETAIL LINE ITEMS

Inventory of Systems

Site and Utilities
- Underground Electrical
- Transformers
- Steam Line
- Steam Metering Station
- Fiber Optic Conduit, Boxes and Fiber

Architectural
- Machinery House Walls
- Pre-Engineered Enclosures
- Windows and Doors with Hardware and Padlocks
- Roofing and flashing

Structural
- Crane Booms
  - Structural Steel
  - Walkways, Stairs and Handrails
  - Steel Plate Floors and Framing
- Tower
  - Structural Steel
  - Stairs and Handrails
- Foundation
  - Concrete
  - Reinforcing Steel
  - Timber Piles

Heating Ventilation Air Conditioning (HVAC)
- Electric Heater in Operator Cabs

Plumbing and Fire Protection
- Electric Evaporative Toilets
- Roof Drains
- Hand-Held Fire Extinguishers

Electrical

- Motor Generator – 250 Volt DC
- Rectifiers AC to DC
- Switch Gear
- Conduits and Conductors from Switch Gear to Slip Rings
- Slip Rings
- Conduits and Conductors on Cranes
- Controllers
- Festooning
- Lights
- Electrical Outlets

Equipment and Machinery

- Elevator
- Motors
- Brakes
- Wire Rope
- Hoist Assemblies
- Head Blocks and Hooks
- Sheaves
- 25 Short Ton Service Crane (#112)
- 15 Long Ton Crane (#111)

10-1-2
Life Cycle Cost Analysis

10-1-2 MOTHBALL PRESENT VALUE (LIFE CYCLE COST)

The life cycle cost is calculated per Life-Cycle Cost Analysis (LCCA) by Sieglinde Fuller, of National Institute of Standards and Technology (NIST), Last updated: 06-28-2010, paragraph D.

After identifying all costs by year and amount and discounting them to present value, they are added to arrive at total life-cycle costs for each alternative:

LCC = I + Repl — Res + E + W + OM&R + O

Where,
LCC = Total LCC in present-value (PV) dollars of a given alternative
I = PV investment costs (if incurred at base date, they need not be discounted)
Repl = PV capital replacement costs
Res = PV residual value (resale value, salvage value) less disposal costs
E = PV of energy costs
W = PV of water costs
OM&R = PV of non-fuel operating, maintenance and repair costs
O = PV of other costs (e.g., contract costs for ESPCs or UESCs)

Notes:
1. Energy Savings Performance Contract (ESPC) and Utility Energy Services Contract (UESC) are not part of this analysis.
2. Energy consumption is negligible.
3. There is no direct water consumption on the crane.

Discount factors are from US Department of Commerce, National Institute of Standards and Technology, Table A-1, Single Present Value (SPV) Factors (non-fuel), OMB Discount Rates, Long Term, and Table A-2, Uniform Present Value (UPV) Factors, OMB Discount Rates, Long Term. The long term OMB discount rate is 2.3%. Long term is defined as more than 8 years.

Specific Assumptions for LCCA:

Funds are available to proceed continuously with the course of action chosen by Norfolk Naval Shipyard (NNSY)

There is no particular dollar value for the mere presence of the Hammer Head Crane.

Based solely on judgment, the study period is set at 20 years to account for any changes in the condition of the foundation (which is not directly visible), the tower and the main boom should the Mothball Alternative be chosen.

"Real" discount rates are used per Memorandum of Agreement, Criteria / Standards for Economic Analysis / Life Cycle Costing for MILCON Design.

HAMMER HEAD CRANE STUDY
PRESENT VALUE (LIFE CYCLE COST ANALYSIS)
MOTHBALL ALTERNATIVE

	Amount ($)	Frequency / Year	Present Value Factor	Present Value ($)
I				
I - Preparation	233,173	Year zero	1	233,173
I - Engineering & NEPA Support	301,421	Year zero	1	301,421
REPL	0	None	0	0
RES	0	None		0
OM&R	14,920	Annual	15.89	237,079
O	0	None		0
				$771,673

10-1-3
Schedule Details

Activity ID	Activity Description	Work Days	Early Start	Early Finish	Predecessors	Successors
Hammerhead Crane - Mothball Alternative (without Salvage)		798	24-Sep-12	04-Dec-15		
PROJECT INITIATION		319	24-Sep-12	09-Jan-14		
Consultant Study & Report		189	24-Sep-12	21-Jun-13		
1100	Contract Award	0	24-Sep-12			1110
1110	Records Search, Field Investigation, Initial Analysis	48	24-Sep-12	30-Nov-12	1100	1120
1120	Prepare 95% Report	57	03-Dec-12	22-Feb-13	1110	1130
1130	Submit 95% Report	0		22-Feb-13	1120	1140
1140	Navy Review	15	25-Feb-13	15-Mar-13	1130	1150
1150	Respond to Navy Comments	20	18-Mar-13	12-Apr-13	1140	1160
1160	Prepare 100% Report	44	15-Apr-13	14-Jun-13	1150	1170
1170	Navy Review	5	17-Jun-13	21-Jun-13	1160	1180
1180	Report Complete	0		21-Jun-13	1170	1200, 1300
Navy Decision on Alternative		20	24-Jun-13	22-Jul-13		
1200	Navy Review Project Alternatives	20	24-Jun-13	22-Jul-13	1180	1210
1210	Navy Decision on Project Alternative to Advance	0		22-Jul-13	1200	1400
Navy Review of Real Estate/Real Property Procedures		130	24-Jun-13	09-Jan-14		
1300	Navy Review of Real Estate/Real Property Procedures	130	24-Jun-13	09-Jan-14	1180	1310
1310	Navy Decision on Real Estate/Real Property	0		09-Jan-14	1300	2130
Navy Procurement of Engineering/Environmental Consultant(s)		45	23-Jul-13	24-Sep-13		
1400	Navy Procurement of Engineering/Environmental Consultant(s)	45	23-Jul-13	24-Sep-13	1210	2100, 2200
Alternative 1 - MOTHBALL		544	25-Sep-13	04-Dec-15		
Engineering		230	25-Sep-13	28-Aug-14		
2100	NTP for Preliminary Engineering	0	25-Sep-13		1400	2110
2110	Preliminary Engineering to Support Draft EA	65	25-Sep-13	09-Jan-14	2100	2120
2120	Completion of Preliminary Engineering	45	10-Jan-14	13-Mar-14	2110	2130
2130	Contract Documents	120	14-Mar-14	28-Aug-14	2120, 1310	2140
2140	Contract Documents Ready for Bid	0		28-Aug-14	2130	2400, 2300
NEPA Compliance		249	25-Sep-13	24-Sep-14		
2200	NTP to Environmental Consultant	0	25-Sep-13		1400	2210
2210	NEPA Compliance Process	249	25-Sep-13	24-Sep-14	2200	2290
2290	NEPA Compliance Complete	0		24-Sep-14	2210	2510, 2300
Sources Sought		65	26-Jun-14	24-Sep-14		
2300	Sources Sought	65	26-Jun-14	24-Sep-14	2140, 2290	2400
Contractor Solicitation		65	25-Sep-14	07-Jan-15		
2400	Contractor Solicitation & Award Process	65	25-Sep-14	07-Jan-15	2140, 2300	2510
Construction		160	08-Jan-15	25-Aug-15		
2500	Construction Phase - Salvage & Mothball	160	08-Jan-15	25-Aug-15	2510	2870
Construction Start Up		75	08-Jan-15	24-Apr-15		
2510	NTP for Construction	0	08-Jan-15		2400, 2290	2520, 2500
2520	Contractor Mobilization	20	08-Jan-15	05-Feb-15	2510	2620, 2710, ...
2530	Prepare Safety Plan	40	06-Feb-15	03-Apr-15	2520	2540
2540	Submit Safety Plan	0		03-Apr-15	2530	2550
2550	Navy Review & Approve Safety Plan	15	06-Apr-15	24-Apr-15	2540	

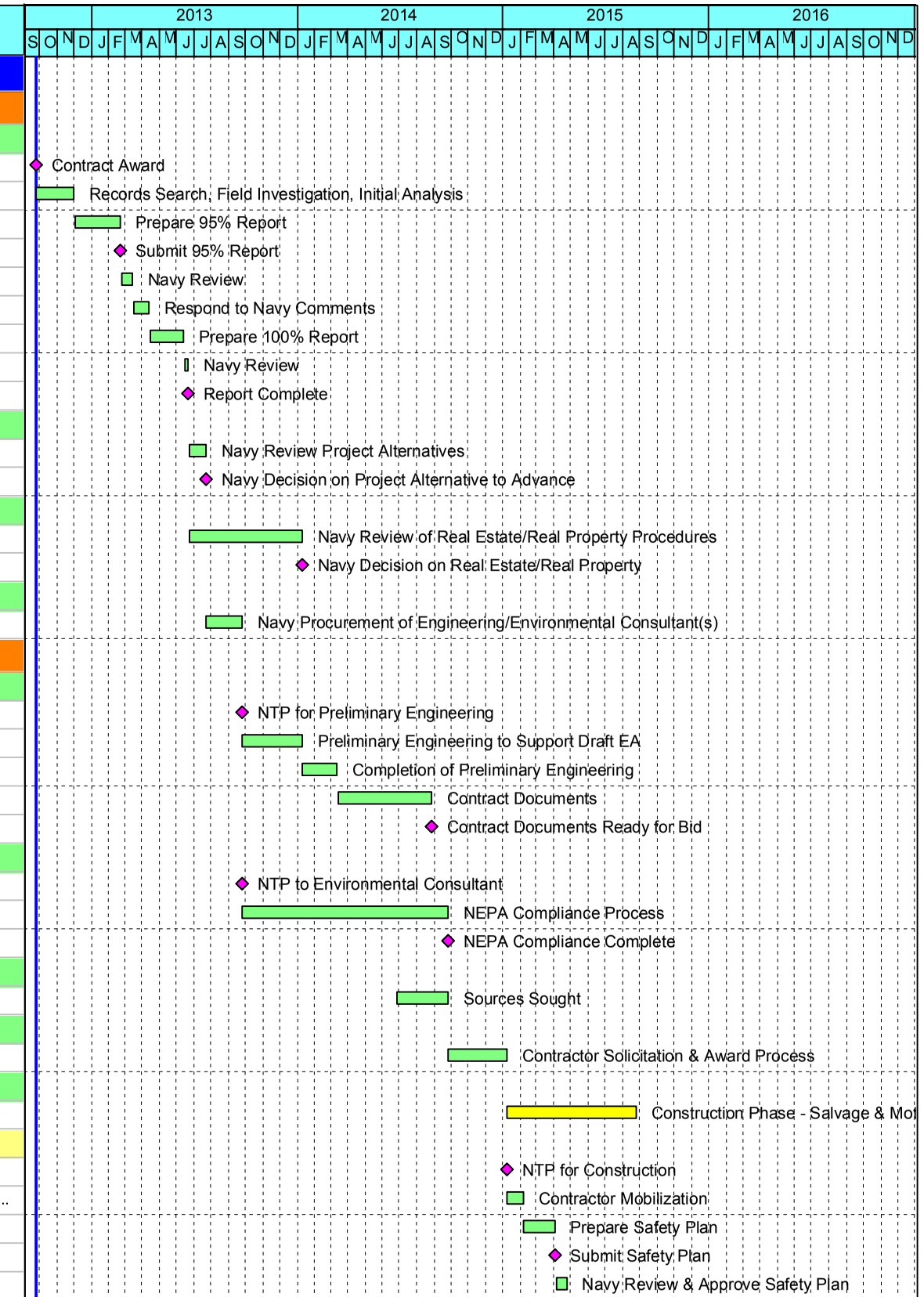

© Oracle Corporation

Navy Hammerhead Crane Study - Final Report

Alternative 1 - Mothball without Salvage

Project Schedule

STV 100 Years

Activity ID	Activity Description	Work Days	Early Start	Early Finish	Predecessors	Successors
2570	Prepare Hoist Technical Information	20	06-Feb-15	06-Mar-15	2520	2580
2580	Submit Hoist Technical Information	0		06-Mar-15	2570	2590
2590	Navy Approve Hoist Technical Information	10	09-Mar-15	20-Mar-15	2580	2600
2600	Procure Hoist	20	23-Mar-15	17-Apr-15	2590	2610
2610	Assemble Hoist	5	20-Apr-15	24-Apr-15	2600	
2620	Prepare Remaining Shop Dwgs	30	06-Feb-15	20-Mar-15	2520	2630
2630	Submit Remaining Shop Dwgs	0		20-Mar-15	2620	2640
2640	Navy Approval Remaining Shop Dwgs	10	23-Mar-15	03-Apr-15	2630	
Crane Mothball Preparation		**105**	**06-Feb-15**	**07-Jul-15**		
2710	Perform Overall Inspection of Crane	10	06-Feb-15	20-Feb-15	2520	2720
2720	Rust Removal & Water Intrusion Protection	20	23-Feb-15	20-Mar-15	2710	2730, 2730
2730	Mothball Mechanical Systems	30	23-Mar-15	01-May-15	2720, 2720	2740, 2740
2740	Mothball Electrical Systems	30	13-Apr-15	22-May-15	2730, 2730	2750, 2750
2750	Mothball Structural Elements	30	04-May-15	15-Jun-15	2740, 2740	2760, 2760
2760	Inspect & Repair Access for Future Maintenance (stairs, ladders, walkways, etc)	30	26-May-15	07-Jul-15	2750, 2750	2800
Site Work & Clean Up		**10**	**08-Jul-15**	**21-Jul-15**		
2800	Site Work and Clean Up	10	08-Jul-15	21-Jul-15	2760	2850
Construction Close Out		**25**	**21-Jul-15**	**25-Aug-15**		
2850	Substantial Completion	0		21-Jul-15	2800	2860
2860	Contractor Punch List	10	22-Jul-15	04-Aug-15	2850	2870, 2865
2865	Contractor Release of Claims & Close Out	15	05-Aug-15	25-Aug-15	2860	2870
2870	Final Completion	0		25-Aug-15	2500, 2860, ...	2900
Project Close Out		**70**	**26-Aug-15**	**04-Dec-15**		
2900	Navy Project Close Out	70	26-Aug-15	04-Dec-15	2870	2910
2910	Project Complete	0		04-Dec-15	2900	

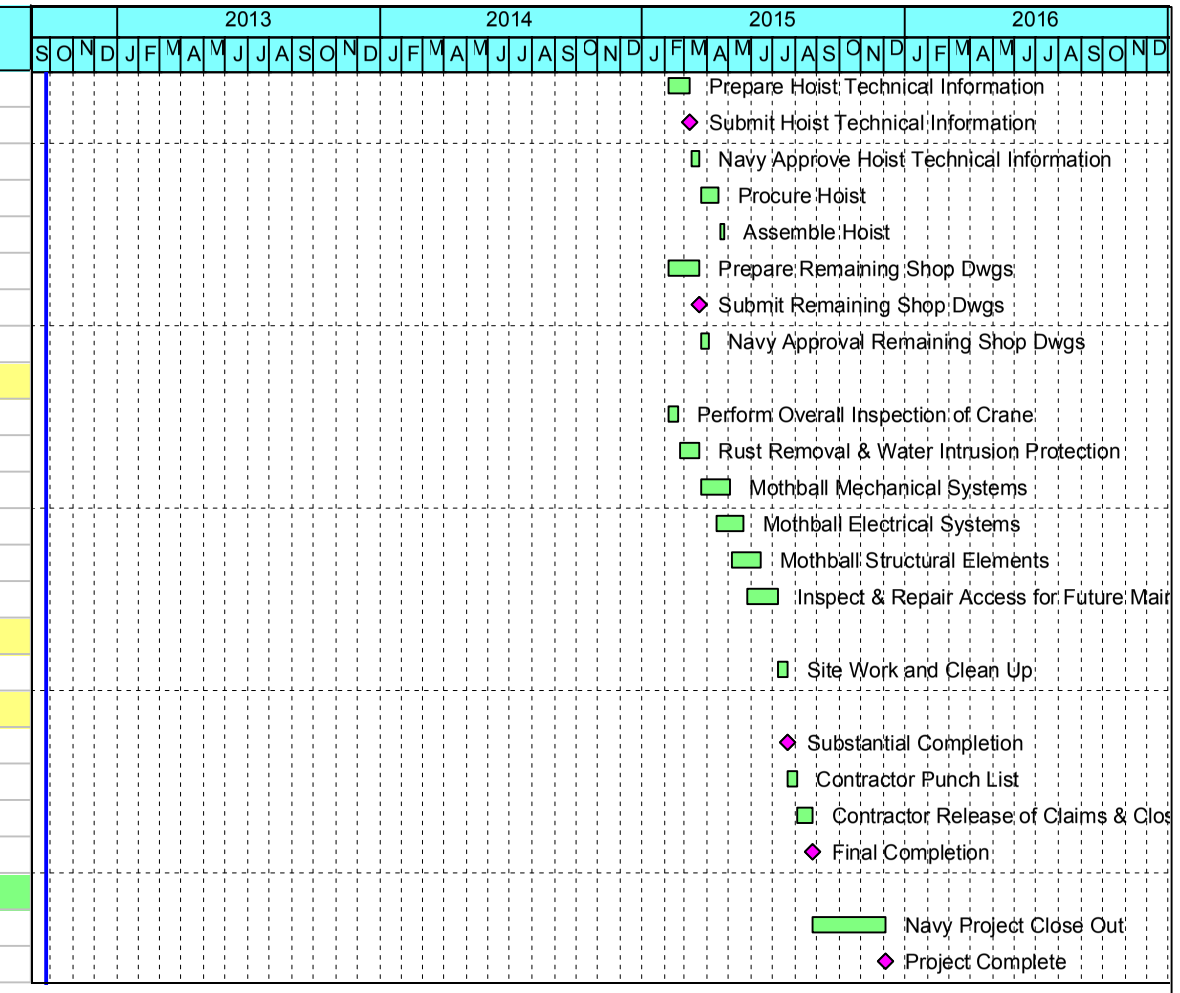

© Oracle Corporation

Navy Hammerhead Crane Study - Final Report

Alternative 1 - Mothball without Salvage

Project Schedule

10-1-4
Alternative Details

10-1-4 Mothball Alternative Details

Attachment 10-1-4 presents recommendations to prepare and maintain the Hammerhead Crane System for a twenty year mothball storage period. Section 6 of the report defines mothball, addressed the general approach to mothballing the Hammerhead Crane, and makes general recommendations.

Recommendations are provided in two parts:

- Preparation Recommendations
- Maintenance Recommendations

No actions are recommended for the 25 ST Service Crane that is in the machinery house of the 350 LT Crane.
No actions are recommended for the foundation at this time because the foundation is not accessible for examination.

10-1-4-1 Preparation Recommendations

Table 10-1-4-1 Boom 350 LT Crane – Recommended Mothball Preparation

Item No.	Element	Recommended Action
Typical		
J1.1	Entire	Walkthrough and remove loose parts that may fall. No loose parts were identified in the study.
Structure		
	Machinery House	
J1.2	Water intrusion and drainage	Identify how water is entering the machinery house and if practical seal. Suspect locations include the slate vents, wire rope openings, gaps in fiberglass paneling, and crane access at rear of house. Add 7/8" diameter drainage holes in the machinery house floor plate to drain at collection points, e.g., between the "B" hoist and work bench. Two to four holes expected.

Table 10-1-4-1 Boom 350 LT Crane – Recommended Mothball Preparation

Item No.	Element	Recommended Action
		At locations where the floor plates are thin, less than ¼", remove rust and restore coating.
J1.3	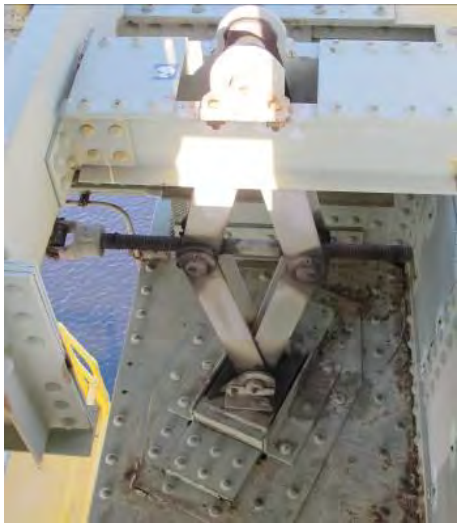	Install restraint to prevent rotate spud lock from becoming easily disengaged.
Mechanical		
Lift System		
J1.4	Hoist ropes	Secure hoist rope ropes so they are not just held by the braking system. Suggest installing wire rope clamps to each wire rope forward of the drum and several feet behind the front wall of the machinery house and connecting the rope clamps to the "C" hoist structural base with wire rope slings and tightened come-alongs.
Machinery		
J1.5	Hoist brakes	Install a sign near each hoist brake assembly warning to not remove or adjust the brake before first removing the hook block and rope or otherwise securing the hoist system. Six required.
J1.6	Rotation brakes	Install a sign near each rotation brake assembly

Table 10-1-4-1 Boom 350 LT Crane – Recommended Mothball Preparation

Item No.	Element	Recommended Action
		warning to not remove or adjust the brake before ensuring the spud lock is engaged. Four required.
Crane Trolley		
J1.7	Trolley radius indicator system	Remove the six 3/8" diameter wire ropes of the radius indicator system. There are two wire segments for each trolley, one on the forward side and a second on the back side. Each rope ranges from 226' to 394' long, and runs down the right side of the boom about 8' above the trolley rail. Reference H & P drawing 6398-3-1108 & -1109
Electrical		
J1.8	Power supply	All electrical connections, except the 220 VAC service power and its neutral should be disconnected and isolated at the crane tower base. Adequate safeguards should be in place to ensure only the 220 VAC power is energized. DC wiring is 8/C – 500 MCM, 220 VAC wiring is 3/C- #1 and communications wiring is 8/c - #18.
J1.9	Slip ring enclosure	Remove 220 VAC line and neutral conductors from slip rings. Also, remove the 220 VAC line conductors from the brush connection leading to the machinery house and cab. Butt splice these connections to power the hammerhead electric panel(s) bypassing the slip rings.
J1.10	Slip ring enclosure	Secure the enclosure. Suggest drilling holes in slip ring enclosure and access door and install hasp and padlock to secure electrical enclosure.
J1.11	Operator's cab	Verify that all power has been removed. AC power should be removed at the lighting panel and DC power should be removed at the base of the column. Some pass-through AC power may need to be preserved.
J1.12	Festoon trolleys	Remove the festoon system cabling supplying the three trolleys. The electrical cables should be disconnected at the crane side junction box and at the trolley side junction box. The copper

Table 10-1-4-1 Boom 350 LT Crane – Recommended Mothball Preparation

Item No.	Element	Recommended Action
		cabling will have some recycling value. Reference drawing H & P 6398-3-1435.
J1.13	Festoon trolleys	Remove the festoon trolleys. Suggest removing the end stop at the end of the trolley festoon runway rail and remove all festoon trolleys including roller assemblies and saddles. Reference H & P drawing 6398-3-1435.
J1.14	Walkway lights	Inspect and repair as required the eight walkway lights positioned along the upper boom walkway, reference drawing H & P 6398-3-1436, Section A-A.
J1.15	Walkway lights	Inspect and repair as required the ten platform lights positioned on the hammerhead rotate drive platform, reference H & P drawing 6398-3-1437, Section C-C.
J1.16	Floodlights	Remove the remaining floodlights from the underside of the hammerhead boom. It appears that only three fixtures remain of the original five shown on the drawings. They are located just outside and below the right side boom walkway. The floodlights are hanging by conduit, which should be removed.
J1.17	Machinery house	Remove all lighting panel circuit breakers feeding: - panel lights - space heaters - operator's cab devices - toilets and other non-essential devices
J1.18	Machinery house	Inspect and repair the four 110 VAC receptacles mounted at the base of the side walls of the machinery house as necessary. Reference H & P drawing 6398-3-1436, Section B-B.
J1.19	Machinery house	Inspect and repair the twelve AC powered light fixtures mounted on the upper side walls of the machinery house as necessary. Reference drawing H & P 6398-3-1436, Section B-B.
J1.20	Aircraft lights	Verify power and function of aircraft warning lights at both ends of the upper walkway. Repair as necessary.
J1.21	Holiday lights	Verify that the wiring for holiday lights at the boom tip is functional and safe. Repair as

Table 10-1-4-1 Boom 350 LT Crane – Recommended Mothball Preparation

Item No.	Element	Recommended Action
		necessary.
J1.22	Slip ring enclosure	Install a sign near the slip ring enclosure and the machinery house lighting panel stating that the 110 and 220 VAC power remains energized.

Table 10-1-4-2 Tower 350 LT Crane – Recommended Mothball Preparation

J2.1	Tower Stairs	Inspect and repair stair treads and supporting steel where delaminated or loss by corrosion exceeds ¼-inch. Replace failed handrail post basses.
J2.2	Tower Structure	Replace steel where delaminated or where loss by corrosion exceeds ¼-inch. Mechanically clean new steel and corroded steel, prepare, prime and coat to match existing adjacent color.

Table 10-1-4-3 15 LT Crane - Recommended Mothball Preparation

Item No.	Element	Recommended Action
Typical		
J4.1	Entire	Walkthrough and remove loose parts that may fall. No loose parts were identified in the study.
Structure		
Rotor Stability		
J4.2	t:\s1968\reports-meetings\2013-02_studyreport_95%\figure_15lt_crane_lashing.vsd	Lash with wire rope or chain the rotor to the lower frame at the front side. The lashing should be rated for at least 5 ST of vertical reaction and be installed loose enough to allow for slight rotation between the rotor and the lower frame. Pipe softeners at the edges of the rotor and lower frame beams are recommended. Calculations indicate that due to the significant counterweight at the back of the machinery house, the rotor does not meet the stability criteria for the design hurricane wind blowing on the front of the crane.

Table 10-1-4-3 15 LT Crane - Recommended Mothball Preparation

Item No.	Element	Recommended Action
Lower Frames		
J4.3		Remove rust and repair coating at the inside lower flanges of the lower frame longitudinal beams. The size of the repair areas is approximately ten square feet total for both beams. Inside of lower flange of longitudinal beam taken from under the spider.
		Close-up view of lower flange corrosion.
Machinery House		
J4.4	Water intrusion	Identify how water is entering the house and if practical seal. Add 7/8" diameter drainage holes in the machinery house floor plate to drain at collection points.
J4.5		Add structural cover over the deteriorated decking and caulk seal cover edges. Plywood or steel recommended. View of deck plate from below. Portions of plate exist just outside of and just inside of the machinery house.

Table 10-1-4-3 15 LT Crane - Recommended Mothball Preparation

Item No.	Element	Recommended Action
King Pin and Spud Locks		
J4.6		Install restraint to prevent the translate spud lock from becoming easily disengaged.
J4.7		Install restraint to prevent rotate spud lock from becoming easily disengaged.
Spider Structure and Rollers		
J4.8		Drill drain holes in the center spider "tray" structure.
Mechanical Systems		
Lift System		
J4.9	Hoist rope	Secure hoist rope so it is not just held by the

Table 10-1-4-3 15 LT Crane - Recommended Mothball Preparation

Item No.	Element	Recommended Action
		braking system. Suggest install wire rope clamp to the wire rope forward of the drum and several feet behind the front wall of the machinery house. Secure rope clamp to the hoist base with a wire rope sling and come-along.
Machinery		
J4.10	Machinery – hoist	Install a sign near each hoist brake assembly warning to not remove or adjust the brake before first removing the hook block and rope or otherwise securing the hoist system. Two required.
J4.11	Machinery – rotation drive	Install a sign near each rotation brake assembly warning to not remove or adjust the brake before ensuring the spud lock is engaged. Two required.
Electrical System		
J4.12	Festoon system	Remove the cables from the revolver crane festoon system, which is mounted just outboard of the upper boom chord walkway. Isolate the 220 VAC cable so that it can be rerouted. The remaining cables can be cut about 6 inches outside of FJB #2 located on the 15 LT crane gantry structure and at about 6 inches outside of FJB #1 located adjacent to the upper cord handrail toward the back of the hammerhead crane. The copper in the removed cables can be recycled. Reference H & P drawing 6398-2413.
J4.13	Festoon system	Remove the sixteen (16) end-trolley and tow-trolleys from the revolver crane festoon system. The trolleys may be removed from the S beam by removing the end clamp bracket and rolling the trolleys off the back end of the beam, reference Wampfler drawing C340-99 F003 Rev 1.
J4.14	Festoon system	We do not see a need to remove the festoon rail (S 10 X 25.4 by 311'–0").
J4.15	Festoon system	Inside the slip ring enclosure, remove the 220 VAC and neutral leads from both sides of the slip ring (ring side and shoe side). Butt splice these wires together to bypass the slip rings. Shorten the AC power festoon cable and re-terminate in FJB#1. The section of wire between the arm over the walkway and FJB#1 should be secured

Table 10-1-4-3 15 LT Crane - Recommended Mothball Preparation

Item No.	Element	Recommended Action
		to the festoon rail using UV protected tie wraps.
J4.16	Slip ring enclosure	Secure the enclosure. We suggest drilling holes in the slip ring enclosure and access door and install hasp and padlock to secure electrical enclosure.
J4.17	Machinery house	Remove all lighting panel circuit breakers feeding: - panel lighting - motor space heaters - panel and slip ring heater - AC power to operator's cab - boom flood light and collector ring heater - panel heater - toilet and other non-lighting, non-warning light, and non-machinery house receptacles Reference H & P drawing 6398-3-2408.
J4.18	Machinery house	Inspect and repair as necessary the two 110 VAC receptacles mounted at the base of the side walls of the machinery house. Reference H & P drawing 6398-3-2419.
J4.19	Machinery house	Inspect and repair as necessary the four AC powered light fixtures mounted on the ceiling of the machinery house. Reference drawing H & P 6398-3-2419.
J4.20	Boom	Remove floodlight from boom tip. The floodlight is hanging by conduit, which should be removed. Inspect the boom tip to verify that no remaining loose parts (anemometer, conduit, etc.) could fall to the ground.
J4.21	Operator's cab	Verify that all power has been removed. AC power should be removed at the lighting panel and DC power should be removed at the base of the column and at the slip ring enclosure.
J4.22	Accessories	Install a durable sign on or directly adjacent to the slip ring enclosure and the machinery house lighting panel stating that 110 and 220 VAC power remain energized.

Table 10-1-4-4 Safety Preparations

a. Replace damaged hand rail bases throughout.

b. On the exterior stairs at the south end of the 350LT crane machinery room, extend hand rail stanchions and provide upper hand rail that meets current criteria.

c. Demolish perforated floors. Repair or replace structural steel supporting the demolished floor area. Provide new steel floor to match existing adjacent surfaces.

d. Provide permanent steel attachment points per current requirements for personal fall protection lanyards. Prepare, prime and paint attachment points to reduce corrosion. At least three sets of attachment points are required for personnel to travel above the slew ring (ring gear).

e. Provide means of attachment for personal fall protection along the centerline of the main boom (crane #110). There appear to be areas requiring periodic re-painting that cannot be economically reached by man-lift cranes.

10-1-4-5 Maintenance Recommendations

Yearly visual inspections are recommended to confirm that the condition of the hammerhead crane has not changed, e.g., the amount of corrosion has not increased significantly. Maintain inspection records, including photos in a report format, so that changes can be tracked and understood.

Table 10-1-4-4 Boom 350 LT Crane – Recommended Mothball Maintenance

Item No.	Element	Recommended Action
Typical		
J5.1	Entire	Maintain safety systems e.g., aircraft warning lights
J5.2	Entire	Maintain access structures as required for yearly inspection, i.e., walkways, stairs, and ladders.
J5.3	Entire	Remove or restrain parts that have become loose and that present a danger of falling.
Structure		
Machinery House		
J5.4	Machinery house	Verify that doors, rope openings, hatches, and covers are in place and reasonably protect the

Table 10-1-4-4 Boom 350 LT Crane – Recommended Mothball Maintenance

Item No.	Element	Recommended Action
		house from the weather, birds, and other contamination. Repair leaks and drill drain holes in decking as needed.
Operator's Cab		
J5.5	Operator's cab	Verify that doors, windows, and covers are closed and reasonably protect the interior from the weather.
Truss		
J5.6		Monitor corrosion at bolted connections. If corrosion continues at the current rate, we expect no action will be required for the 20 year mothball period. If corrosion accelerates or if significant corrosion is observed, have an engineer review the condition and determine if protection or repair is required.
J5.7		Monitor corrosion at diagonals and verticals at the machinery house floor. The corrosion to date does not require repair. If the water intrusion and drainage recommended in J1.2 is implemented, no further action is expected to be required.
Trolley Runway Structure		
J5.8		Monitor corrosion where the vertical connects to the trolley rail support beam. If corrosion continues at the current rate, no action will be required for the 20 year mothball period. If corrosion accelerates and significant corrosion occurs, have an engineer review the condition and determine if additional action is required. Significant corrosion would be over 50% section loss of hanger section or rivets. View looking down at end of hanger to girder

Table 10-1-4-4 Boom 350 LT Crane – Recommended Mothball Maintenance

Item No.	Element	Recommended Action
		connection from walkway.
Mechanical		
Lifting Equipment		
J5.9	Wire rope	From the boom walkway, visually inspect each hook block wire rope from the front of the machinery house, through each trolley and through the boom tip equalizer sheaves. If for the observable length of rope enough corrosion has occurred that wires have broken and protrude from the rope, report the condition to an engineer for evaluation. Coating of the wire rope may be required. Based on the condition of the observed portion of rope, no action is expected during the mothball period.
Machinery		
J5.10	Hoist brakes	Visually inspect each of the six hoist brakes in the machinery house to verify the springs or mechanisms have not been tampered with and there is no excessive corrosion. Where excessive corrosion is present, mechanically clean and protect with paint or sealant. Verify that warning signs remain in place and readable. Replace or repair as necessary.
J5.11	Rotation brakes	Visually inspect each of the four rotation drive brakes outside and below the machinery house to verify the springs or mechanisms have not been tampered with and there is no excessive corrosion. Where excessive corrosion is present, mechanically clean and protect with paint or sealant. Verify that warning signs remain in place and readable. Replace or repair as necessary.

Table 10-1-4-4 Boom 350 LT Crane – Recommended Mothball Maintenance

Item No.	Element	Recommended Action
Electrical		
J5.12	Power supply and lighting	Visually inspect the lower and upper walkway light support structures to verify they have adequate strength. Repair or protect deterioration as necessary. Verify operation of walkway lights, machinery house service receptacles and machinery house lights. Repair as necessary.

Table 10-4-1-5 Tower 350 LT Crane – Recommended Mothball Maintenance

J6.1	Elevator	Inspect, test, repair and re-certify.
J6.2	Tower Stairs	Maintain access structures as required for yearly inspection, i.e., walkways, stairs, and ladders. Presuming initial repairs are made as recommended above, inspect and repair damaged treads, supporting steel, handrail bases, handrail posts and handrails. Where surface rust or coating failure is observed, prepare, prime and paint to match existing adjacent color.
J6.3	Structural Steel	Inspect structural steel. Where rivets or bolts are loose, delamination occurs or corrosion exceeds ¼-inch, obtain inspection and report of qualified structural engineer. Makes repairs per report of structural engineer. Where surface rust or coating failure is observed, prepare, prime and paint to match existing adjacent color.

Table 10-1-4-6 15 LT Crane – Recommended Mothball Maintenance

Item No.	Element	Recommended Action
Typical		
J8.1	Entire	Maintain safety systems e.g., aircraft warning lights.
J8.2	Entire	Maintain access structures as required for yearly inspection.
J8.3	Entire	Remove or restrain parts that have become loose and that present a danger of falling.

Table 10-1-4-6 15 LT Crane – Recommended Mothball Maintenance

Item No.	Element	Recommended Action
Structure		
Machinery House		
J8.4	Machinery H=house	Verify that doors, rope openings, hatches, and covers are in place and reasonably protect the house from the weather, birds and other contamination. Repair leaks and drill drain holes in floor as needed.
Operator's Cab		
J8.5	Operator's cab	Verify that doors, windows, and covers are closed and reasonably protect the interior from the weather.
Truss		
J8.6	t:\s1968\reports-meetings\2013-02_studyreport_95%\figure_15lt_crane_lashing.vsd	Verify added lashing is in acceptable condition. Refer to Item 4.2
Mechanical		
Lifting Equipment		
J8.7	Wire rope	Visually inspect the wire rope from the front of the machinery house, through the hook block, and to the dead end connection. If for the observable length of rope enough corrosion has occurred that wires have broken and protrude from the rope, report the condition to an engineer for evaluation. Coating of the wire rope may be required. Based on the condition of the observed portion of rope, no action is expected during the mothball period.

Table 10-1-4-6 15 LT Crane – Recommended Mothball Maintenance

Item No.	Element	Recommended Action
Machinery		
J8.8	Hoist brakes	Visually inspect both hoist brakes in the machinery house to verify the springs or mechanisms have not been tampered with and there is no excessive corrosion. Particular attention should be paid to the spring. Where excessive corrosion is present, mechanically clean and protect with paint or sealant. Verify that warning signs remain in place and are readable. Replace or repair as necessary.
J8.9	Rotation brakes	Visually inspect both rotation drive brakes in the machinery house to verify the springs or mechanisms have not been tampered with and there is no excessive corrosion. Particular attention should be paid to the spring. Where excessive corrosion is present, mechanically clean and protect with paint, preservative, or sealant. Verify that warning signs remain in place and are readable. Replace or repair as necessary.
Electrical System		
J8.10	Power supply and lighting	Visually inspect the operation of walkway lights, machinery house service receptacles, and machinery house lights. Repair as necessary.

Table 10-1-4-7 SAFETY

a. Conduct an annual safety inspection. The safety inspection is likely to be most effective if conducted concurrently with structural, electrical and mechanical (machinery) inspections.

b. Update the FALL PROTECTION PLAN prepared annually. Allow only those with specific duties on the crane to enter the crane. Ensure all personnel entering the crane have fall protection training applicable to the conditions on the crane. Conduct site-specific training and orientation as appropriate. Include hazards to heads and eyes associated with the type of construction and equipment at the crane.

c. Provide and require use of appropriate fire extinguishers by personnel performing work on the crane.

d. Prepare, prime and paint corroded portions of stair treads and clip angles supporting them.

e. Specifically inspect ferrous metal components made of steel in lighter weights than structural steel. Examples include wheels and tracks for festooning. Repair those that are part of access or other safety systems. Remove those that are not required for safety or structural integrity, and are not a significant element of the overall crane profile.

10-2
Demolition Alternative

10-2-1
Cost Details

A--System Report
SUBMITTAL: FINAL
SOFTWARE VERSION: SUCCESS 5.X
REPORT REVISION: Nov. 5 2003
ESTIMATE SAVED AS: Norfolk Naval Shipyard - Hammerhead Crane Study - Demolit

CONSTRUCTION CONTRACT:
DATABASE USED: RSM 2012
PRINTING DATE: 11 July 2013
Page No. 1

PROJECT: Hammerhead Crane Study - Demolition Option
PROJECT SITE: Norfolk Naval Shipyard
A/E NAME: STV Inc
PROJECT SIZE: 1.00 LS
CONSTRUCTION FUNDS AVAILABLE, DOLLARS: $3,000,000

ESTIMATOR:
CAT CODE:
UIC:
PROJECT #:
DATE OF ESTIMATE: 07/11/2013
BID DATE:

WBS CODE	DESCRIPTION	COST/WBS BASED ON 1 LS	COST/ WBS UNIT	TOTAL MARKED UP COSTS MATL	LABOR	EQUIP	UNIT COST	TOTAL
	HAMMERHEAD CRANE STUDY - NORFOLK NAVAL SHIPYARD, PROJECT TOTALS							**1,401,000**
	PROJECT LEVE NOTE: Davis Bacon Wages Norfolk 01/2012							
	PROJECT SUBTOTALS			(1,237,528)	699,065	1,938,976	0	1,400,513
DEMOLITION ALTERNATIVE				**(1,237,528)**	**699,065**	**1,938,976**	**0**	**1,400,513**
	---DEMOLITION TASKS			(1,237,528)	699,065	1,938,976	0	1,400,513
	---DISTRIBUTED COSTS			2,811	379,032	319,625	0	701,468
	> Contains Distributed Levels							

Distributed costs are included in cost of the Demolition Tasks. See Attachment 10-2, E-Detail Report Unburdened, individual sub/crew.

B--System Report
SUBMITTAL: FINAL
SOFTWARE VERSION: SUCCESS 5.X
REPORT REVISION: Nov. 5 2003
ESTIMATE SAVED AS: Norfolk Naval Shipyard - Hammerhead Crane Study - D

CONSTRUCTION CONTRACT:
DATABASE USED: RSM 2012
PRINTING DATE: 11 July 2013
Page 1 OF 1

PROJECT: Hammerhead Crane Study - Demolition Option
PROJECT SITE: Norfolk Naval Shipyard
A/E NAME: STV Inc
PROJECT SIZE: 1.00 LS
CONSTRUCTION FUNDS AVAILABLE, DOLLARS: $3,000,000

ESTIMATOR:
CAT CODE:
UIC:
PROJECT #:
DATE OF ESTIMATE: 07/11/2013
BID DATE:

WBS CODE	DESCRIPTION	COST/PROJECT UOM BASED ON 1 LS	COST/ WBS UNIT	TOTAL MARKED UP COSTS MATL	LABOR	EQUIP	UNIT COST	TOTAL
	HAMMERHEAD CRANE STUDY - NORFOLK NAVAL SHIPYARD, PROJECT TOTALS							**1,401,000**
PROJECT NOTE: Davis Bacon Wages Norfolk 01/2012								
	****PROJECT SUBTOTALS****			(1,237,528)	699,065	1,938,976	0	1,400,513
DEMOLITION ALTERNATIVE				***(1,237,528)***	***699,065***	***1,938,976***	***0***	***1,400,513***
-DEMOLITION TASKS				**(1,237,528)**	**699,065**	**1,938,976**	**0**	**1,400,513**
01	HAMMER HEAD CRANE DEMOLITION			843	524,952	1,658,552	0	2,184,347
	**** Gutting the interior of the Boom Crane and Steel Structure Demolition*							
02	CONCRETE BASE DEMOLITION			4,956	13,484	403	0	18,843
03	BASE ELECTRICAL DEMOLITION			624	23,809	915	0	25,348
04	FIBER OPTIC RELOCATION			783	5,451	0	0	6,235
05	SALVAGEABLE EQUIPMENT REMOVAL			0	41,352	266,059	0	307,410
	**** All costs to remove salvageable equipment include labor & equipment to disassemble, hook up to crane, & lower onto barge for transportation.*							
06	STEAM LINE RELOCATION			53,679	90,017	13,047	0	156,743
07	EQUIPMENT SALVAGE VALUE			(386,023)	0	0	0	(386,023)
08	STEEL SCRAP SALVAGE			(912,390)	0	0	0	(912,390)
	**** Steel scrap pricing from scrapmonster.com for Eastern US.*							
-DISTRIBUTED COSTS				**2,811**	**379,032**	**319,625**	**0**	**701,468**
	This level is distributed							

Distributed costs are included in cost of the Demolition Tasks. See Attachment 10-2, E-Detail Report Unburdened, individual sub/crew.

D--Markup Report
SUBMITTAL: FINAL
SOFTWARE VERSION: SUCCESS 5.X
REPORT REVISION: Nov. 5 2003
ESTIMATE SAVED AS: Norfolk Naval Shipyard - Hammerhead Crane Study - Demolit

CONSTRUCTION CONTRACT:
DATABASE USED: RSM 2012
PRINTING DATE: 07/11/13
PAGE NUMBER: 1

PROJECT: Hammerhead Crane Study - Demolition Option
PROJECT SITE: Norfolk Naval Shipyard
A/E NAME: STV Inc
PROJECT SIZE: 1.00 LS
CONSTRUCTION FUNDS AVAILABLE, DOLLARS: $3,000,000

ESTIMATOR:
CAT CODE:
UIC:
PROJECT #:
DATE OF ESTIMATE: 07/11/2013
BID DATE:

CONTRACTOR	DESCRIPTION	MATERIAL	LABOR	EQUIPMENT	UNIT COST
PRIME	**PRIME CONTRACTOR**				
	TAXES ON MATERIAL	5.00%	0.00%	0.00%	0.00%
	DESIGN CONTINGENCIES	20.00%	20.00%	20.00%	0.00%
	PRIME OVERHEAD	6.00%	6.00%	6.00%	6.00%
	PRIME PROFIT	7.50%	7.50%	7.50%	7.50%
	BOND	2.00%	2.00%	2.00%	2.00%
	ESCALATION	2.90%	2.90%	2.90%	0.00%
	COMPOSITE MARKUPS FOR PRIME				
	MATERIAL COMPOSITE MARKUP		**1.507**		
	LABOR COMPOSITE MARKUP		**1.435**		
	EQUIPMENT COMPOSITE MARKUP		**1.435**		
	UNIT COST (Sub Quote) COMPOSITE MARKUP		**1.162**		
ELEC	**ELECTRICAL SUBCONTRACTOR**				
	PRIME OVERHEAD ON SUBS WORK	4.00%	4.00%	4.00%	4.00%
	PRIME PROFIT ON SUBS WORK	6.50%	6.50%	6.50%	6.50%
	COMPOSITE MARKUPS FOR ELEC				
	MATERIAL COMPOSITE MARKUP		**1.108**		
	LABOR COMPOSITE MARKUP		**1.108**		
	EQUIPMENT COMPOSITE MARKUP		**1.108**		
	UNIT COST (Sub Quote) COMPOSITE MARKUP		**1.108**		

PROJECT: Hammerhead Crane Study - Demolition Option
PROJECT SITE: Norfolk Naval Shipyard
A/E NAME: STV Inc
PROJECT SIZE: 1.00 LS
CONSTRUCTION FUNDS AVAILABLE, DOLLARS: $3,000,000

ESTIMATOR:
CAT CODE:
UIC:
PROJECT #:
DATE OF ESTIMATE: 07/11/2013
BID DATE:

CODE	DESCRIPTION / SUB/CREW	QTY	UM	TOTAL COSTS MATERIAL	LABOR	EQUIPMENT	UNIT COST (SUB QUOTE)	TOTAL
	01 HAMMER HEAD CRANE DEMOLITION *LEVEL CONTRACTOR ID APPLIED--PRIME*							
	Gutting the interior of the Boom Crane and Steel Structure D							
02 411 921 10	Selective demolition, gutting interior of Boom crane			0.00	2307.30	2371.88	0.00	4,679.18
RSMeans 2011 Master Unio NoSub/B16	150 hrs/unit 150 TOTAL HRS	1	LSUM	**0**	**2,307**	**2,372**	**0**	**4,679**
02 411 921 10	Crane Demolition, cutting steel & lowering to barges by crane			0.00	77481.14	878592.00	0.00	956,073.14
RSMeans 2011 Master Unio NoSub/DEMO	2880 hrs/unit 2880 TOTAL HRS	1	LSUM	**0**	**77,481**	**878,592**	**0**	**956,073**
02 831 926 48	Removal of lead-based paint, by chemicals, per application, steel			1.17	1.51	0.00	0.00	2.68
RSMeans 2011 Master Unio NoSub/PORD	0.089 hrs/unit 43 TOTAL HRS	480	S.F.	**562**	**724**	**0**	**0**	**1,285**
31 066 015 15	Mobilization, barge by tug boat			0.00	12.60	25.29	0.00	37.88
RSMeans 2011 Master Unio NoSub/B83	0.64 hrs/unit 32 TOTAL HRS	50	Mile	**0**	**630**	**1,264**	**0**	**1,894**
	Subtotal Direct Costs			562	81,142	882,228	0	963,932
	Distributions			(2)	284,628	$273,399	$0	558,026
	Prime Contractor Markups			284	159,182	502,924	0	662,390
	TOTAL 01 HAMMER HEAD CRANE DEMOLITION	3,105	HRS	843	524,952	1,658,552	0	2,184,347
	02 CONCRETE BASE DEMOLITION *LEVEL CONTRACTOR ID APPLIED--PRIME*							
03 050 510 00	Selective concrete demolition, maximum reinforcing, break up into small pieces,excludes shoring, bracing, saw or torch cutting, loading, hauling, dumping			0.00	71.14	24.38	0.00	95.51
						195	**0**	**764**
RSMeans 2011 Master Unio NoSub/B9	5 hrs/unit 40 TOTAL HRS	8	C.Y.	**0**	**569**			
03 305 340 49	Structural concrete, in place, paving, 4"T patch, including reinforcing			16.50	7.58	0.10	0.00	24.17
RSMeans 2011 Master Unio NoSub/C14F	0.3 hrs/unit 60 TOTAL HRS	200	S.F.	**3,300**	**1,515**	**19**	**0**	**4,835**
	Subtotal Direct Costs			3,300	2,084	214	0	5,599
	Distributions			(11)	7,311	$66	$0	7,366
	Prime Contractor Markups			1,667	4,089	122	0	5,878
	TOTAL 02 CONCRETE BASE DEMOLITION	100	HRS	4,956	13,484	403	0	18,843
	03 BASE ELECTRICAL DEMOLITION *LEVEL CONTRACTOR ID APPLIED--PRIME*							
26 050 510 15	Remove, Substation B-6, 2 pieces of switchgear & 1 transformer			0.00	899.78	143.08	0.00	1,042.86
RSMeans 2011 Master Unio ELEC/R3	22.2 hrs/unit 22 TOTAL HRS	1	Ea.	**0**	**900**	**143**	**0**	**1,043**
26 050 510 15	Remove, transfer switch, rectifier, Resitor banks & associated feeders			0.00	648.49	103.12	0.00	751.61
RSMeans 2011 Master Unio ELEC/R3	16 hrs/unit 16 TOTAL HRS	1	Ea.	**0**	**648**	**103**	**0**	**752**
26 050 510 15	Remove equipment from Generator house, including generators, motors, & associated feeders			0.00	1215.92	193.35	0.00	1,409.27
						193	**0**	**1,409**
RSMeans 2011 Master Unio ELEC/R3	30 hrs/unit 30 TOTAL HRS	1	Ea.	**0**	**1,216**			
26 050 510 06	Remove feed to ICS Mobile-Mini storage tralier			0.00	4.71	0.00	0.00	4.71
RSMeans 2011 Master Unio ELEC/ELEC2	0.119 hrs/unit 12 TOTAL HRS	100	L.F.	**0**	**471**	**0**	**0**	**471**
33 051 613 04	Utility structures, utility vaults precast concrete, hand hole, light duty, 1-1/2" thick, 1'-0" x 2'-0" x 1'-9" I.D., excludes excavation and backfill			375.00	86.96	0.00	0.00	461.96
						0	**0**	**462**
RSMeans 2011 Master Unio ELEC/B1	6 hrs/unit 6 TOTAL HRS	1	Ea.	**375**	**87**			
	Subtotal Direct Costs			375	3,323	440	0	4,137
	Subcontractor Markups			40	358	47	0	445
	Distributions			(1)	12,909	$151	$0	13,059
	Prime Contractor Markups			210	7,220	278	0	7,707
	TOTAL 03 BASE ELECTRICAL DEMOLITION	86	HRS	624	23,809	915	0	25,348
	04 FIBER OPTIC RELOCATION *LEVEL CONTRACTOR ID APPLIED--PRIME*							
26 053 930 32	PVC conduit, schedule 40, 1" diameter, in concrete slab, incl terminations, fittings and supports			1.14	1.59	0.00	0.00	2.72
						0	**0**	**409**
RSMeans 2011 Master Unio ELEC/ELEC	0.04 hrs/unit 6 TOTAL HRS	150	L.F.	**171**	**238**			
27 132 313 10	Fiber optics cable			1.50	0.26	0.00	0.00	1.76
RSMeans 2011 Master Unio ELEC/R22	0.009 hrs/unit 2 TOTAL HRS	200	L.F.	**300**	**52**	**0**	**0**	**352**
26 050 510 06	Remove existing fiber optic line			0.00	4.71	0.00	0.00	4.71
RSMeans 2011 Master Unio ELEC/ELEC2	0.119 hrs/unit 12 TOTAL HRS	100	L.F.	**0**	**471**	**0**	**0**	**471**

CODE	DESCRIPTION / SUB/CREW	QTY	UM	TOTAL COSTS MATERIAL	LABOR	EQUIPMENT	UNIT COST (SUB QUOTE)	TOTAL
	Subtotal Direct Costs			471	761	0	0	1,232
	Subcontractor Markups			51	82	0	0	133
	Distributions			(2)	2,956	$0	$0	2,954
	Prime Contractor Markups			264	1,653	0	0	1,917
	TOTAL 04 FIBER OPTIC RELOCATION	20	HRS	783	5,451	0	0	6,235
	05 SALVAGEABLE EQUIPMENT REMOVAL *LEVEL CONTRACTOR ID APPLIED--PRIME*							
	All costs to remove salvageable equipment include labor & eq							
41 221 313 06	Equipment Removal For Salvage, Hoist Assembly A & B			0.00	276.22	6404.16	0.00	6,680.38
RSMeans 2011 Master Unio NoSub/CRANE	12 hrs/unit 12 TOTAL HRS	1	Ea.	**0**	**276**	**6,404**	**0**	**6,680**
41 221 313 06	Equipment Removal For Salvage, Hoist Assembly C			0.00	230.18	5336.80	0.00	5,566.98
RSMeans 2011 Master Unio NoSub/CRANE	10 hrs/unit 10 TOTAL HRS	1	Ea.	**0**	**230**	**5,337**	**0**	**5,567**
41 221 313 06	Equipment Removal For Salvage, Revolving Crane Hoist Assembly			0.00	184.15	4269.44	0.00	4,453.59
RSMeans 2011 Master Unio NoSub/CRANE	8 hrs/unit 8 TOTAL HRS	1	Ea.	**0**	**184**	**4,269**	**0**	**4,454**
41 221 313 06	Equipment Removal For Salvage, Hook Blocks A & B			0.00	138.11	3202.08	0.00	3,340.19
RSMeans 2011 Master Unio NoSub/CRANE	6 hrs/unit 12 TOTAL HRS	2	Ea.	**0**	**276**	**6,404**	**0**	**6,680**
41 221 313 06	Equipment Removal For Salvage, Hook Block C			0.00	138.11	3202.08	0.00	3,340.19
RSMeans 2011 Master Unio NoSub/CRANE	6 hrs/unit 6 TOTAL HRS	1	Ea.	**0**	**138**	**3,202**	**0**	**3,340**
41 221 313 06	Equipment Removal For Salvage, 15T Revolver Block			0.00	138.11	3202.08	0.00	3,340.19
RSMeans 2011 Master Unio NoSub/CRANE	6 hrs/unit 6 TOTAL HRS	1	Ea.	**0**	**138**	**3,202**	**0**	**3,340**
41 221 313 06	Equipment Removal For Salvage, Hammer Head Crane Slip Ring Assembly			0.00	184.15	4269.44	0.00	4,453.59
RSMeans 2011 Master Unio NoSub/CRANE	8 hrs/unit 8 TOTAL HRS	1	Ea.	**0**	**184**	**4,269**	**0**	**4,454**
41 221 313 06	Equipment Removal For Salvage, Revolving Crane Slip Ring Assembly			0.00	138.11	3202.08	0.00	3,340.19
RSMeans 2011 Master Unio NoSub/CRANE	6 hrs/unit 6 TOTAL HRS	1	Ea.	**0**	**138**	**3,202**	**0**	**3,340**
41 221 313 06	Equipment Removal For Salvage, 25 ST Service Crane			0.00	184.15	4269.44	0.00	4,453.59
RSMeans 2011 Master Unio NoSub/CRANE	8 hrs/unit 8 TOTAL HRS	1	Ea.	**0**	**184**	**4,269**	**0**	**4,454**
41 221 313 06	Equipment Removal For Salvage, 15 LT Revolver Crane Festoon System			0.00	138.11	3202.08	0.00	3,340.19
RSMeans 2011 Master Unio NoSub/CRANE	6 hrs/unit 6 TOTAL HRS	1	Ea.	**0**	**138**	**3,202**	**0**	**3,340**
41 221 313 06	Equipment Removal For Salvage, Hammer Head Operator's Cab			0.00	184.15	4269.44	0.00	4,453.59
RSMeans 2011 Master Unio NoSub/CRANE	8 hrs/unit 8 TOTAL HRS	1	Ea.	**0**	**184**	**4,269**	**0**	**4,454**
41 221 313 06	Equipment Removal For Salvage, 15LT Revolver Operator's Cab			0.00	138.11	3202.08	0.00	3,340.19
RSMeans 2011 Master Unio NoSub/CRANE	6 hrs/unit 6 TOTAL HRS	1	Ea.	**0**	**138**	**3,202**	**0**	**3,340**
41 221 313 06	Equipment Removal For Salvage, Sheaves			0.00	92.07	2134.72	0.00	2,226.79
RSMeans 2011 Master Unio NoSub/CRANE	4 hrs/unit 96 TOTAL HRS	24	Ea.	**0**	**2,210**	**51,233**	**0**	**53,443**
41 221 313 06	Equipment Removal For Salvage, Fixed Support Sheaves			0.00	69.06	1601.04	0.00	1,670.10
RSMeans 2011 Master Unio NoSub/CRANE	3 hrs/unit 54 TOTAL HRS	18	Ea.	**0**	**1,243**	**28,819**	**0**	**30,062**
41 221 313 06	Equipment Removal For Salvage, Fleating Support Sheaves			0.00	69.06	1601.04	0.00	1,670.10
RSMeans 2011 Master Unio NoSub/CRANE	3 hrs/unit 18 TOTAL HRS	6	Ea.	**0**	**414**	**9,606**	**0**	**10,021**
31 066 015 15	Mobilization, barge by tug boat			0.00	12.60	25.29	0.00	37.88
RSMeans 2011 Master Unio NoSub/B83	0.64 hrs/unit 16 TOTAL HRS	25	Mile	**0**	**315**	**632**	**0**	**947**
	Subtotal Direct Costs			0	6,392	141,524	0	147,915
	Distributions			0	22,421	$43,858	$0	66,279
	Prime Contractor Markups			0	12,539	80,677	0	93,216
	TOTAL 05 SALVAGEABLE EQUIPMENT REMOVAL	280	HRS	0	41,352	266,059	0	307,410
	06 STEAM LINE RELOCATION *LEVEL CONTRACTOR ID APPLIED--PRIME*							
33 121 315 83	Tap Existing Steam Line			1650.00	89.52	21.48	0.00	1,761.00
RSMeans 2011 Master Unio NoSub/B21	4.667 hrs/unit 5 TOTAL HRS	1	Ea.	**1,650**	**90**	**21**	**0**	**1,761**
33 491 310 11	Manholes, Frames, and Covers, concrete, precast			1950.00	279.93	213.60	0.00	2,443.53
RSMeans 2011 Master Unio NoSub/B6	16 hrs/unit 32 TOTAL HRS	2	Ea.	**3,900**	**560**	**427**	**0**	**4,887**
02 411 317 55	Demolish, remove pavement & curb, concrete, rod reinforced, 7" to 24" thick,			0.00	31.29	47.37	0.00	78.66
	remove with backhoe, excludes hauling					**2,937**	**0**	**4,877**
RSMeans 2011 Master Unio NoSub/B38	1.667 hrs/unit 103 TOTAL HRS	62	C.Y.	**0**	**1,940**			
03 811 350 05	Concrete sawing, concrete, existing slab, rod reinforced, for each additional			0.08	0.14	0.16	0.00	0.38
	inch of depth over 3"					**566**	**0**	**1,329**
RSMeans 2011 Master Unio NoSub/B89	0.007 hrs/unit 25 TOTAL HRS	3,500	L.F.	**280**	**483**			
31 231 613 00	Excavating, trench or continuous footing, common earth, 1/2 C.Y. excavator, 4'			0.00	1.58	1.75	0.00	3.32
	to 6' deep, excludes sheeting or dewatering					**323**	**0**	**614**
RSMeans 2011 Master Unio NoSub/B11M	0.08 hrs/unit 15 TOTAL HRS	185	B.C.	**0**	**291**			
22 111 926 10	Steam measuring/metering station			2375.00	69.08	0.00	0.00	2,444.08
RSMeans 2011 Master Unio NoSub/Q5	1.6 hrs/unit 2 TOTAL HRS	1	Ea.	**2,375**	**69**	**0**	**0**	**2,444**
33 111 340 10	Steam distribution piping, steel			41.00	6.77	7.97	0.00	55.74
RSMeans 2011 Master Unio NoSub/B35A	0.287 hrs/unit 72 TOTAL HRS	250	L.F.	**10,250**	**1,692**	**1,992**	**0**	**13,935**
02 411 333 29	Site demolition, pipe, to 12" diameter, remove			0.00	2.40	1.83	0.00	4.23
RSMeans 2011 Master Unio NoSub/B6	0.137 hrs/unit 27 TOTAL HRS	200	L.F.	**0**	**479**	**366**	**0**	**845**
31 232 313 19	Backfill, trench, up to 300' haul, dozer backfilling, excludes compaction			0.00	0.28	1.14	0.00	1.42
RSMeans 2011 Master Unio NoSub/B10B	0.013 hrs/unit 2 TOTAL HRS	185	L.C.	**0**	**52**	**211**	**0**	**263**
03 305 340 49	Structural concrete, in place, paving, 20"T, including reinforcing			16.50	7.58	0.10	0.00	24.17
RSMeans 2011 Master Unio NoSub/C14F	0.3 hrs/unit 300 TOTAL HRS	1,000	S.F.	**16,500**	**7,576**	**97**	**0**	**24,173**
26 053 313 91	PVC conduit & wire, low voltage wire for metering station			1.65	2.38	0.00	0.00	4.03
RSMeans 2011 Master Unio NoSub/ELEC	0.06 hrs/unit 15 TOTAL HRS	250	L.F.	**413**	**594**	**0**	**0**	**1,007**
33 051 613 04	Utility structures, utility vaults precast concrete, hand hole, light duty, 1-			375.00	86.96	0.00	0.00	461.96

CODE	DESCRIPTION / SUB/CREW	QTY	UM	TOTAL COSTS MATERIAL	LABOR	EQUIPMENT	UNIT COST (SUB QUOTE)	TOTAL
	1/2" thick, 1'-0" x 2'-0" x 1'-9" I.D., excludes excavation and backfill					**0**	**0**	**462**
RSMeans 2011 Master Unio NoSub/B1	6 hrs/unit 6 TOTAL HRS	**1**	**Ea.**	**375**	**87**			
	Subtotal Direct Costs			35,743	13,914	6,940	0	56,597
	Distributions			(122)	48,807	$2,151	$0	50,836
	Prime Contractor Markups			18,058	27,296	3,956	0	49,310
	TOTAL 06 STEAM LINE RELOCATION	603	HRS	53,679	90,017	13,047	0	156,743
	07 EQUIPMENT SALVAGE VALUE *LEVEL CONTRACTOR ID APPLIED--PRIME*							
41 221 313 06	Equipment Salvage, Hoist Assembly A & B			54000.00	0.00	0.00	0.00	54,000.00
RSMeans 2011 Master Unio NoSub/NoCrew	12 -12	**(1)**	**Ea.**	**(54,000)**	**0**	**0**	**0**	**(54,000)**
41 221 313 06	Equipment Salvage, Hoist Assembly C			30800.00	0.00	0.00	0.00	30,800.00
RSMeans 2011 Master Unio NoSub/NoCrew	12 -12	**(1)**	**Ea.**	**(30,800)**	**0**	**0**	**0**	**(30,800)**
41 221 313 06	Equipment Salvage, Hoist Assembly, Revolving Crane			20680.00	0.00	0.00	0.00	20,680.00
RSMeans 2011 Master Unio NoSub/NoCrew	12 -12	**(1)**	**Ea.**	**(20,680)**	**0**	**0**	**0**	**(20,680)**
41 221 313 06	Equipment Salvage, Hook Blocks A & B			17062.50	0.00	0.00	0.00	17,062.50
RSMeans 2011 Master Unio NoSub/NoCrew	12 -24	**(2)**	**Ea.**	**(34,125)**	**0**	**0**	**0**	**(34,125)**
41 221 313 06	Equipment Salvage, Hook Block C			4875.00	0.00	0.00	0.00	4,875.00
RSMeans 2011 Master Unio NoSub/NoCrew	12 -12	**(1)**	**Ea.**	**(4,875)**	**0**	**0**	**0**	**(4,875)**
41 221 313 06	Equipment Salvage, 15T Revolver Block			1462.50	0.00	0.00	0.00	1,462.50
RSMeans 2011 Master Unio NoSub/NoCrew	12 -12	**(1)**	**Ea.**	**(1,463)**	**0**	**0**	**0**	**(1,463)**
41 221 313 06	Equipment Salvage, Hammer Head Slip Ring Assembly			12130.00	0.00	0.00	0.00	12,130.00
RSMeans 2011 Master Unio NoSub/NoCrew	12 -12	**(1)**	**Ea.**	**(12,130)**	**0**	**0**	**0**	**(12,130)**
41 221 313 06	Equipment Salvage, Revolver Slip Ring Assembly			7350.00	0.00	0.00	0.00	7,350.00
RSMeans 2011 Master Unio NoSub/NoCrew	12 -12	**(1)**	**Ea.**	**(7,350)**	**0**	**0**	**0**	**(7,350)**
41 221 313 06	Equipment Salvage, 25ST Service Crane			36700.00	0.00	0.00	0.00	36,700.00
RSMeans 2011 Master Unio NoSub/NoCrew	12 -12	**(1)**	**Ea.**	**(36,700)**	**0**	**0**	**0**	**(36,700)**
41 221 313 06	Equipment Salvage, Revolver Crane Festoon System			3565.00	0.00	0.00	0.00	3,565.00
RSMeans 2011 Master Unio NoSub/NoCrew	12 -12	**(1)**	**Ea.**	**(3,565)**	**0**	**0**	**0**	**(3,565)**
41 221 313 06	Equipment Salvage, Hammer Head Operator's Cab			6250.00	0.00	0.00	0.00	6,250.00
RSMeans 2011 Master Unio NoSub/NoCrew	12 -12	**(1)**	**Ea.**	**(6,250)**	**0**	**0**	**0**	**(6,250)**
41 221 313 06	Equipment Salvage, Revolver Operator's Cab			2500.00	0.00	0.00	0.00	2,500.00
RSMeans 2011 Master Unio NoSub/NoCrew	12 -12	**(1)**	**Ea.**	**(2,500)**	**0**	**0**	**0**	**(2,500)**
41 221 313 06	Equipment Salvage, Sheaves, 45" Pitch Dia			1050.00	0.00	0.00	0.00	1,050.00
RSMeans 2011 Master Unio NoSub/NoCrew	12 -288	**(24)**	**Ea.**	**(25,200)**	**0**	**0**	**0**	**(25,200)**
41 221 313 06	Equipment Salvage, Fixed Support Sheaves			725.00	0.00	0.00	0.00	725.00
RSMeans 2011 Master Unio NoSub/NoCrew	12 -216	**(18)**	**Ea.**	**(13,050)**	**0**	**0**	**0**	**(13,050)**
41 221 313 06	Equipment Salvage, Fleeting Support Sheaves			725.00	0.00	0.00	0.00	725.00
RSMeans 2011 Master Unio NoSub/NoCrew	12 -72	**(6)**	**Ea.**	**(4,350)**	**0**	**0**	**0**	**(4,350)**
	Subtotal Direct Costs			(257,038)	0	0	0	(257,038)
	Distributions			877	0	$0	$0	877
	Prime Contractor Markups			(129,862)	0	0	0	(129,862)
	TOTAL 07 EQUIPMENT SALVAGE VALUE	(732)		(386,023)	0	0	0	(386,023)
	08 STEEL SCRAP SALVAGE *LEVEL CONTRACTOR ID APPLIED--PRIME*							
	Steel scrap pricing from scrapmonster.com for Eastern US.							
41 221 313 06	Tower & Boom Steel Salvage, framing and misc metals salvaged for scrap			333.00	0.00	0.00	0.00	333.00
RSMeans 2011 Master Unio NoSub/NoCrew	12 -21893	**(1,824.40)**	**Ton**	**(607,525)**	**0**	**0**	**0**	**(607,525)**
	Subtotal Direct Costs			(607,525)	0	0	0	(607,525)
	Distributions			2,072	0	$0	$0	2,072
	Prime Contractor Markups			(306,938)	0	0	0	(306,938)
	TOTAL 08 STEEL SCRAP SALVAGE	(21,893)		(912,390)	0	0	0	(912,390)

77 ITEMIZED FIELD OVERHEAD/QUALITY CONTROL

7701 FIELD OVERHEAD

	770101 FIELD OVERHEAD, DETAIL ITEMS							
This Level Is Distributed								
01 511 350 08	Temporary electrical power equipment (pro-rated per job), connections, manlift,double			95.00	158.48	0.00	0.00	253.48
						0	**0**	**253**
RSMeans 2011 Master Unio NoSub/ELEC	4 hrs/unit 4 TOTAL HRS	**1**	**Ea.**	**95**	**158**			
01 511 350 08	Aerial Lift, includes operator, per day on job site			0.00	204.31	5323.20	0.00	5,527.50
RSMeans 2011 Master Unio NoSub/LIFT	8 hrs/unit 480 TOTAL HRS	**60**	**DAY**	**0**	**12,258**	**319,392**	**0**	**331,650**
01 543 650 21	Mobilization or demobilization, crane, over 75 ton			0.00	489.75	116.60	0.00	606.35
RSMeans 2011 Master Unio NoSub/A3E	16 hrs/unit 32 TOTAL HRS	**2**	**Ea.**	**0**	**980**	**233**	**0**	**1,213**
01 311 320 02	Field personnel, superintendent, average			0.00	1925.00	0.00	0.00	1,925.00
RSMeans 2011 Master Unio NoSub/NoCrew		**45**	**Week**	**0**	**86,625**	**0**	**0**	**86,625**
01 311 320 02	Field personnel, project manager, average			0.00	2075.00	0.00	0.00	2,075.00
RSMeans 2011 Master Unio NoSub/NoCrew		**45**	**Week**	**0**	**93,375**	**0**	**0**	**93,375**
01 311 320 01	Field personnel, field engineer, average			0.00	1265.00	0.00	0.00	1,265.00

CODE	DESCRIPTION / SUB/CREW	QTY	UM	TOTAL COSTS MATERIAL	LABOR	EQUIPMENT	UNIT COST (SUB QUOTE)	TOTAL
	This Level Is Distributed							
RSMeans 2011 Master Unio NoSub/NoCrew		**45**	**Week**	**0**	**56,925**	**0**	**0**	**56,925**
01 521 320 03	Office Trailer, furnished, rent per month, 32' x 8', excl. hookups			193.00	0.00	0.00	0.00	193.00
RSMeans 2011 Master Unio NoSub/NoCrew		**8**	**Ea.**	**1,544**	**0**	**0**	**0**	**1,544**
01 521 320 12	Storage Boxes, rent per month, 20' x 8'			71.50	0.00	0.00	0.00	71.50
RSMeans 2011 Master Unio NoSub/NoCrew		**8**	**Ea.**	**572**	**0**	**0**	**0**	**572**
02 411 923 09	Rubbish handling, dumpster, alternate pricing method, rent per month, average for all sizes, includes one dump per week, cost to be added to demolition cost.			75.00	0.00	0.00	0.00	75.00
RSMeans 2011 Master Unio NoSub/NoCrew		**8**	**Ea.**	**600**	**0**	**0**	**0**	**600**
	Preliminary Engineering			0.00	128711.00	0.00	0.00	128,711.00
NoSub/NoCrew		**1**	**LSUM**	**0**	**128,711**	**0**	**0**	**128,711**
	Subtotal Direct Costs			2,811	379,032	319,625	0	701,468
	TOTAL 770101 FIELD OVERHEAD, DETAIL ITEMS	516	HRS	2,811	379,032	319,625	0	701,468

THIS WBS CODE DOES NOT FOLLOW TRI-SERVICE NUMBERING SYSTEM. MODIFY CODE TO MATCH EXISTING WBS, OR USE THE 77 XX 9? or 77 XX 8? NUMBERING CONVENTION

SUBTOTAL 7701 FIELD OVERHEAD			2,811	379,032	319,625	0	701,468
MARKUP			*1.000*	*1.000*	*1.000*	*0.000*	*1.000*
TOTAL 7701 FIELD OVERHEAD			2,811	379,032	319,625	0	701,468
SUBTOTAL 77 ITEMIZED FIELD OVERHEAD/QUALITY CONTROL			2,811	379,032	319,625	0	701,468
MARKUP			*1.000*	*1.000*	*1.000*	*0.000*	*1.000*
TOTAL 77 ITEMIZED FIELD OVERHEAD/QUALITY C			**2,811**	**379,032**	**319,625**	**0**	**701,468**

Material = -80.81% OF PROJECT COST Labor =47.88% OF PROJECT COST Equipment = 132.93% OF PROJECT COST UCSubQuote =0.00% OF PROJECT COST
1.50%OF PROJECT PERFORMED BY SUBCONTRACTORS BASED ON % OF WORK VALUE 68 DETAIL LINE ITEMS

Cost of Engineering and National Environmental Policy Act Support
Demolition Alternative

NEPA Support

	Hours	Labor Rate	Cost
Historic Preservation Specialist	800	$48.00	$38,400.00
Structural Engineer	64	$60.00	$3,840.00
Crane / Machinery Engineer	64	$65.00	$4,160.00
Technical Writer	320	$45.00	$14,400.00
Technician	160	$28.00	$4,480.00
Project Manager	200	$61.00	$12,200.00
Direct Labor Cost			$77,480.00
Overhead On Direct Labor 150%			$116,220.00
Subtotal			$193,700.00
Profit 10%			$19,370.00
Direct Costs			
Travel		$17,000.00	
Printing		$15,000.00	
Presentation Supplies		$500.00	
Subtotal Direct Costs			$32,500.00
NEPA Support Demolition Alternative			$245,570.00

Technical RFP Sections, Technical Evaluation Factors

	Hours	Labor Rate	Cost
Architect	24	$54.00	$1,296.00
Structural Engineer	80	$60.00	$4,800.00
Crane / Machinery Engineer	40	$65.00	$2,600.00
Civil / Site Engineer	32	$53.00	$1,696.00
HVAC Engineer	32	$53.00	$1,696.00
Plumbing / Fire Protection Engineer	32	$62.00	$1,984.00
Environmenta l Engineer	48	$53.00	$2,544.00
Estimator	40	$49.00	$1,960.00
Scheduler	24	$42.00	$1,008.00
Technical Writer	40	$45.00	$1,800.00
Technician	32	$28.00	$896.00
Project Manager	80	$61.00	$4,880.00
Direct Labor Cost			$27,160.00

	Overhead On Direct Labor 150%		$40,740.00
	Subtotal		$67,900.00
	Profit 10%		$6,790.00
Direct Costs			
	Travel	$4,000.00	
	Printing	$12,000.00	
	Presentation Supplies	$0.00	
	Subtotal Direct Costs		$16,000.00
	Pre-Solicitation Engineering		$90,690.00
Total Engineering and NEPA Support - Demolition			$336,260.00

The Inventory of Systems is at Attachment 10-1-1.

10-2-2
Life Cycle Cost Analysis

10-2-2 DEMOLITION LIFE CYCLE COST ANALYSIS

After the initial cost of the Demolition Alternative, there is no cost associated with the Hammer Head Crane even though there will still be steam, electric power, fiber optic cables, and steam meter signal crossing the site. Therefore, the Life Cycle Cost is the initial cost and no calculations are performed.

10-2-3
Schedule Details

Activity ID	Activity Description	Work Days	Early Start	Early Finish	Predecessors	Successors
Hammerhead Crane - Demolition Alternative		818	24-Sep-12	15-Jan-16		
PROJECT INITIATION		319	24-Sep-12	09-Jan-14		
Consultant Study & Report		189	24-Sep-12	21-Jun-13		
1100	Contract Award	0	24-Sep-12			1110
1110	Records Search, Field Investigation, Initial Analysis	48	24-Sep-12	30-Nov-12	1100	1120
1120	Prepare 95% Report	57	03-Dec-12	22-Feb-13	1110	1130
1130	Submit 95% Report	0		22-Feb-13	1120	1140
1140	Navy Review	15	25-Feb-13	15-Mar-13	1130	1150
1150	Respond to Navy Comments	20	18-Mar-13	12-Apr-13	1140	1160
1160	Prepare 100% Report	44	15-Apr-13	14-Jun-13	1150	1170
1170	Navy Review	5	17-Jun-13	21-Jun-13	1160	1180
1180	Report Complete	0		21-Jun-13	1170	1200, 1300
Navy Decision on Alternative		20	24-Jun-13	22-Jul-13		
1200	Navy Review Project Alternatives	20	24-Jun-13	22-Jul-13	1180	1210
1210	Navy Decision on Project Alternative to Advance	0		22-Jul-13	1200	1400
Navy Review of Real Estate/Real Property Procedures		130	24-Jun-13	09-Jan-14		
1300	Navy Review of Real Estate/Real Property Procedures	130	24-Jun-13	09-Jan-14	1180	1310
1310	Navy Decision on Real Estate/Real Property	0		09-Jan-14	1300	3130
Navy Procurement of Engineering/Environmental Consultant(s)		45	23-Jul-13	24-Sep-13		
1400	Navy Procurement of Engineering/Environmental Consultant(s)	45	23-Jul-13	24-Sep-13	1210	3100, 3200
Alternative 2 - DEMOLITION		564	25-Sep-13	15-Jan-16		
Engineering		230	25-Sep-13	28-Aug-14		
3100	NTP for Preliminary Engineering	0	25-Sep-13		1400	3110
3110	Preliminary Engineering to Draft EIS	65	25-Sep-13	09-Jan-14	3100	3120
3120	Completion of Preliminary Engineering	45	10-Jan-14	13-Mar-14	3110	3130
3130	Contract Documents	120	14-Mar-14	28-Aug-14	3120, 1310	3140
3140	Contract Documents Ready for Bid	0		28-Aug-14	3130	3300, 3400
NEPA Compliance		249	25-Sep-13	24-Sep-14		
3200	NTP to Environmental Consultant	0	25-Sep-13		1400	3210
3210	NEPA Compliance Process	249	25-Sep-13	24-Sep-14	3200	3365
3365	NEPA Compliance Complete	0		24-Sep-14	3210	3300, 3400
Sources Sought		65	26-Jun-14	24-Sep-14		
3300	Sources Sought	65	26-Jun-14	24-Sep-14	3140, 3365	3400
Contractor Solicitation		65	25-Sep-14	07-Jan-15		
3400	Contractor Solicitation & Award Process	65	25-Sep-14	07-Jan-15	3140, 3300, ...	3600
Construction		180	08-Jan-15	23-Sep-15		
3500	Construction Phase - Salvage & Demolition	180	08-Jan-15	23-Sep-15	3600	3880
Construction Start Up		80	08-Jan-15	01-May-15		
3600	NTP for Construction	0	08-Jan-15		3400	3500, 3610, ...
3610	Contractor Mobilization	20	08-Jan-15	05-Feb-15	3600	3620, 3660
3620	Prepare Safety Plan	40	06-Feb-15	03-Apr-15	3610	3630
3630	Submit Safety Plan	0		03-Apr-15	3620	3640
3640	Navy Review & Approve Safety Plan	15	06-Apr-15	24-Apr-15	3630	3650

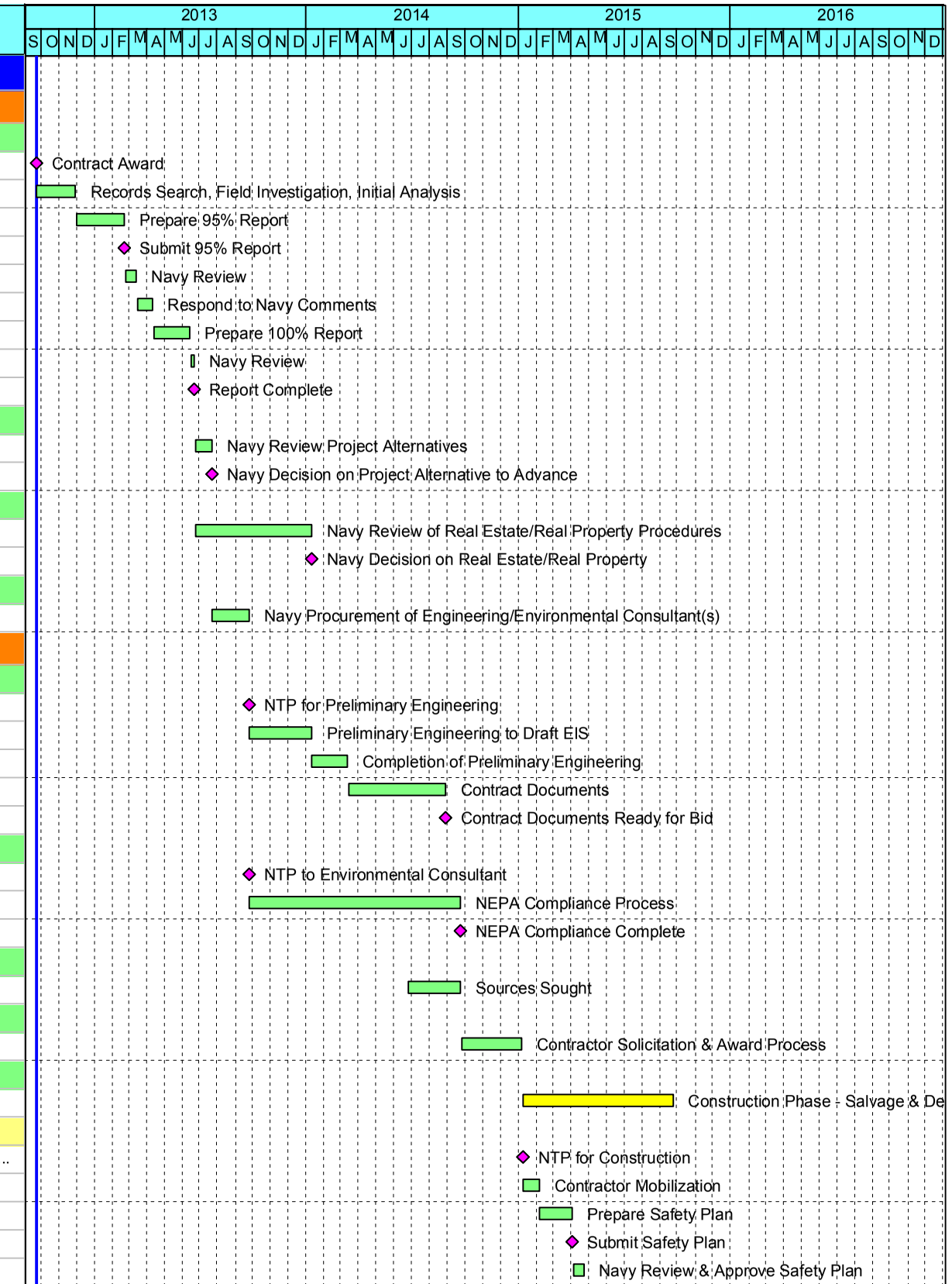

© Oracle Corporation

Navy Hammerhead Crane Study - Final Report

Alternative 2 - Demolition

Project Schedule

STV 100 Years

Activity ID	Activity Description	Work Days	Early Start	Early Finish	Predecessors	Successors
3650	Proof Testing	5	27-Apr-15	01-May-15	3700, 3640	3750, 3760
3660	Prepare Crane Technical Information	20	06-Feb-15	06-Mar-15	3610	3670
3670	Submit Crane Technical Information	0		06-Mar-15	3660	3680
3680	Navy Approve Crane Technical Information	10	09-Mar-15	20-Mar-15	3670	3690
3690	Procure Crane	20	23-Mar-15	17-Apr-15	3680	3700
3700	Assemble Crane	5	20-Apr-15	24-Apr-15	3690	3740, 3650, ...
3710	Prepare Remaining Shop Dwgs	30	08-Jan-15	20-Feb-15	3600	3720
3720	Submit Remaining Shop Dwgs	0		20-Feb-15	3710	3730
3730	Navy Approval Remaining Shop Dwgs	10	23-Feb-15	06-Mar-15	3720	3750
Crane Equipment/Assemblies Removal & Salvage		**55**	**30-Mar-15**	**15-Jun-15**		
3740	Re-route Steam Line	20	30-Mar-15	24-Apr-15	3700	3750
3750	Lead Paint Abatement at Locations for Cutting Steel	5	04-May-15	08-May-15	3650, 3740, ...	3760
3760	Remove Smaller Crane (#111)	5	11-May-15	15-May-15	3750, 3700, ...	3770
3770	Remove Roof of Main Crane	10	18-May-15	01-Jun-15	3760	3780
3780	Prepare Equipment for Removal/Remove all Salvageable/Sellable Equipment	10	02-Jun-15	15-Jun-15	3770	3790
Crane Demolition		**35**	**16-Jun-15**	**04-Aug-15**		
3790	Demolish Main Crane	30	16-Jun-15	28-Jul-15	3780	3795
3795	Demolish Concrete Tower Bases	5	29-Jul-15	04-Aug-15	3790	3800
Site Work & Clean Up		**10**	**05-Aug-15**	**18-Aug-15**		
3800	Site Work and Clean Up	10	05-Aug-15	18-Aug-15	3795	3850
Construction Close Out		**25**	**18-Aug-15**	**23-Sep-15**		
3850	Substantial Completion	0		18-Aug-15	3800	3860
3860	Contractor Punch List	10	19-Aug-15	01-Sep-15	3850	3870, 3880
3870	Contractor Release of Claims & Close Out	15	02-Sep-15	23-Sep-15	3860	3880
3880	Final Completion	0		23-Sep-15	3500, 3860, ...	3900
Project Close Out		**70**	**24-Sep-15**	**15-Jan-16**		
3900	Navy Project Close Out	70	24-Sep-15	15-Jan-16	3880	3910
3910	Project Complete	0		15-Jan-16	3900	

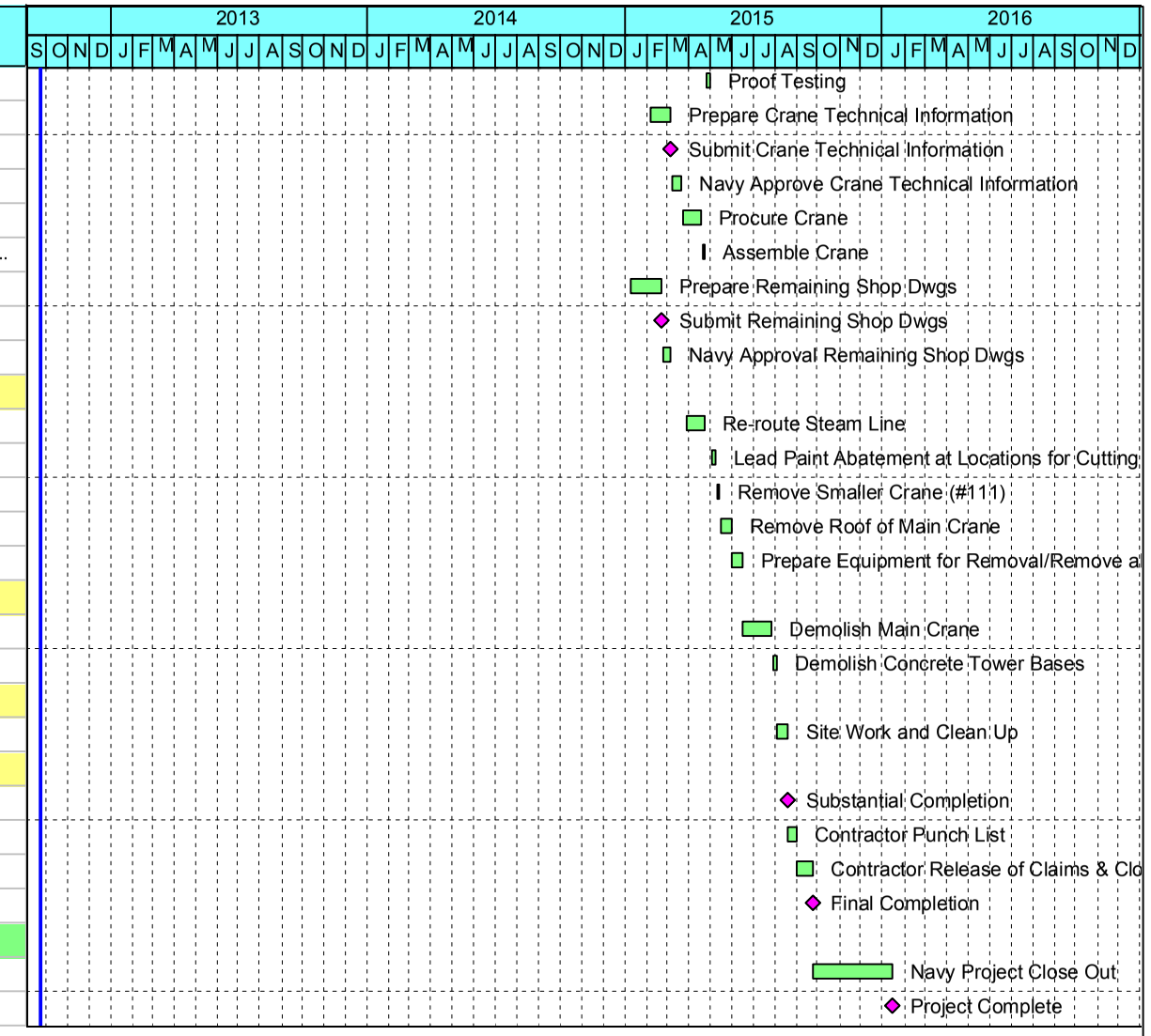

© Oracle Corporation

Navy Hammerhead Crane Study - Final Report

Alternative 2 - Demolition

Project Schedule

10-2-4
Alternative Details

10-2-4 Demolition Alternative Details

Attachment 10-2-4 presents recommendations for the alternative to demolish the Hammerhead Crane System. Refer to Section 6 of the report for a description of the demolition alternative and its goals. The report also includes discussion of contracting methods.

Demolition of the foundation below the current pavement level is not necessary at this time and would incur additional expense.

Table 10-2-4-1: 15 LT Crane – Recommended Demolition

Item No.	Element	Recommended Action
Typical		
K1.1	Entire	Coordinate with NNSY Public Works any items that should be retained for future use (museum pieces). Deliver to NNSY Public Works.
K1.2	Entire	Salvage any items that may have value. Remove from Government property.
Structure		
K1.3		Disassemble and demolish 15 LT Crane. Dispose of all material off Government property.

Table 10-2-4-2: Boom 350 LT Crane – Recommended Demolition

Item No.	Element	Recommended Action
Typical		
K2.1	Entire	Coordinate with NNSY Public Works any items that should be retained for future use (museum pieces). Deliver to NNSY Public Works.
K2.2	Entire	Salvage any items that may have value. Remove from Government property.
Structure		
K2.3		Disassemble and demolish Boom 350 LT Crane. Dispose of all material off Government property.

Table 10-2-4-3 Tower 350 LT Crane – Recommended Demolition

Item No.	Element	Recommended Action
Typical		
K3.1	Entire	Coordinate with NNSY Public Works any items that should be salvaged for the Government. Deliver to NNSY Public Works.
K3.2	Entire	Salvage any items that may have value. Remove from Government property.
Structure		
K3.3		Disassemble and demolish Tower 350 LT Crane. Dispose of all material off Government property.

Table 10-2-4-4: Foundation 350 LT Crane – Recommended Demolition

Item No.	Element	Recommended Action
Typical		
K4.1	Entire	Coordinate with NNSY Public Works any items that should be salvaged for the Government. Deliver to NNSY Public Works.
K4.2	Entire	Salvage any items that may have value. Remove from Government property.
Foundation		
K4.3		Disassemble and demolish the column foundations of the 350 LT Crane per sketches in this attachment. Dispose of all material off Government property.

Table 10-2-4-5: Recommended Site Demolition

Item No.	Element	Recommended Action
Typical		
K5.1	Entire	Coordinate with NNSY Public Works any items that should be salvaged for the Government. Deliver to NNSY Public Works.
K5.2	Entire	Salvage any items that may have value. Remove from Government property.
Site		
K5.3		NNSY Public Works to notify building property book owner of upcoming demolition at least 45 days prior. Disconnect power and any other miscellaneous utility connections. Demolish Generator House, including concrete pad and all conduit, fasteners, and appurtenances. Dispose of all material off Government property.

Table 10-2-4-6: Electrical – Recommended Demolition

Item No.	Element	Recommended Action
Electrical		
K6.1		Disassemble and demolish Substation B-6, including transformer and concrete pad. Dispose of all material off Government property.
K6.2		Disassemble and demolish transfer switch, rectifier and resistor banks, including concrete pad. Dispose of all material off Government property.
K6.3		Disassemble and demolish main disconnect switch, including concrete pad. Dispose of all material off Government property.
K6.4	Security Lighting	Remove security lighting junction box at tower, including associated conduit which is to be capped below ground. Dispose of all material off Government property.
K6.5		NNSY Public Works to notify Building 262 and Berth operators of upcoming fiber optic temporary disconnection. Remove fiber optic backbone junction box at tower. Intercept conduit that runs from Building 262 to Berths and install new handhole at the point the conduit exits the ground and extend conduit underground to Berths. Dispose of all material off Government property.

Table 10-2-4-7 – Mechanical – Recommended Demolition

Item No.	Element	Recommended Action
Mechanical		
K7.1	Steam	NNSY Public Works to notify Building 262 of upcoming steam temporary disconnection (note that there is another steam line on the opposite side of the building). Use existing valve at utility trench to shut off steam. Demolish steam line to the point that it passes under the pavement. Provide a steam manhole, or other enclosure, flush with adjacent pavement, and valve to shut off steam to Building 262. Dispose of all material off Government property.

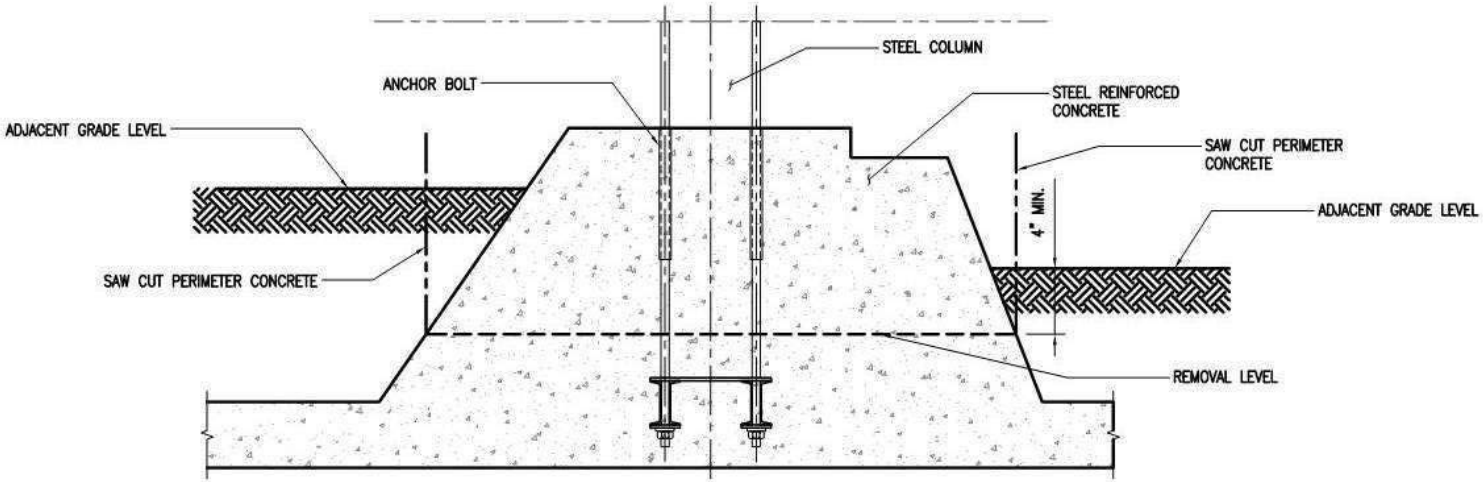

NOTES:

1. STEEL REINFORCEMENTS ARE NOT SHOWN.
2. SAW CUT PERIMETER CONCRETE MINIMUM OF 4" BELOW THE LOWEST ADJACENT GRADE LEVEL.
3. BREAK OR SAW CUT CONCRETE COLUMN BASES.
4. CUT STEEL REINFORCEMENTS AND ANCHOR BOLTS.
5. FILL THE HOLES WITH 3,000 PSI (MINIMUM) CONCRETE. FINISH GRADE SHALL MATCH THE ADJACENT GRADE LEVEL.

DEMOLISH TOWER COLUMN BASE

SCHEMATIC ONLY
NOT TO SCALE

HAMMER HEAD CRANE DEMOLITION ALTERNATIVE
FIBER OPTIC CONDUIT

1. Current fiber optic conduit runs inside the above-ground-utility trench. Confirm elevation of electric, water, storm drain, steam, and other utilities.
2. Coordinate with steam demolition shown elsewhere.
3. Disconnect and remove fiber at nearest junction each way.
4. Demolish fiber optic conduit from utility trench to the point it passes below ground just west of crane foundation.
5. Saw cut and demolish concrete pavement from west side of crane to above ground utility trench. Excavate trench.
6. Provide conduit, hand holes, boxes and appurtenances.
7. Reconnect and test fiber optic line with appurtenances.
8. Provide backfill and concrete pavement to match existing.

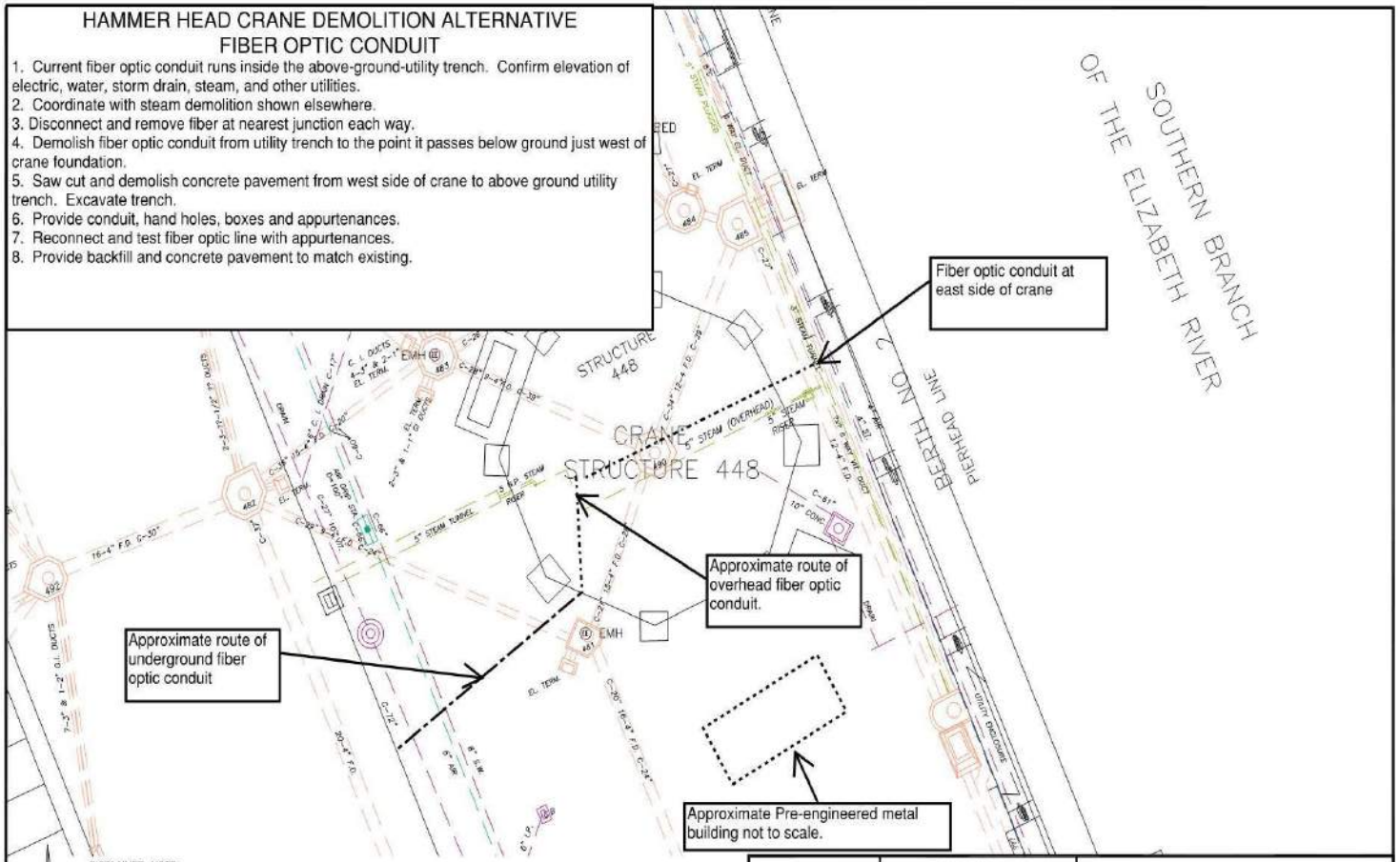

DISCLAIMER NOTE:
Please note that the contents of the drawing are based on a combination of aerial photogrammetrical surveys, topographical surveys, and data taken from record drawings. The information, details, and location of items contained in the drawing are believed to be accurate within plus/minus 0.5 ft., but the burden for determining accuracy, completeness, and appropriateness for use rests solely on the user accessing this information. The user acknowledges and accepts all inherent limitations of the data, including the fact that they are dynamic and in a constant state of maintenance, correction, and revision.

DEPARTMENT OF THE NAVY
NAVAL FACILITIES ENGINEERING COMMAND
NAVFAC MIDLANT
PWD PORTSMOUTH PORTSMOUTH, VIRGINIA

SPEC. NO.: N/A	
CONTRACT NO.: N/A	
JOB NO.: -	DATE:
AIC/EIC:	DESIGNED: -
DRAWN:	REVIEWED: -

GENERAL AREA MAP

NORFOLK NAVAL SHIPYARD PORTSMOUTH, VIRGINIA

MASTER NO. N/A

NAVFAC DWG. NO. -

SKETCH SHEET 1 OF 1

FILE NAME: H:\Maps\ANSY\Station Map for Site Plans\ANSY-site-map.dwg LAYOUT NAME: 11X17 PLOTTED: Tuesday, July 03, 2012 - 1:25pm

HAMMER HEAD CRANE DEMOLITION ALTERNATIVE
STEAM

1. Current steam line runs inside the above-ground-utility trench.
Confirm elevation of electric, water, storm drain, fiber optic conduit, and other utilities.
2. Disconnect power and remove temporary pre-engineered metal building.
3. Isolate 5-inch steam riser at steam tunnel on east side of crane and at first valve inside building 662. Confirm (a) steam line is plugged to the north, and (b) there is no connection inside building 662 from the steam at the west side of the building to any point east of valve used to isolate.
4. Cut and cap 5-inch riser at utility trench.
5. Demolish steam line from utility trench to the point it passes below ground just west of crane foundation. Demolish steam metering station.
6. Saw cut and demolish concrete pavement from west side of crane to above ground utility trench. Excavate trench.
7. Provide steam line, valve(s) steam manhole, steam metering station and conduit for meter signal.
8. Reconnect and test steam line with appurtenances. Reconnect and test meter signal.
9. Provide backfill and concrete pavement to match existing.

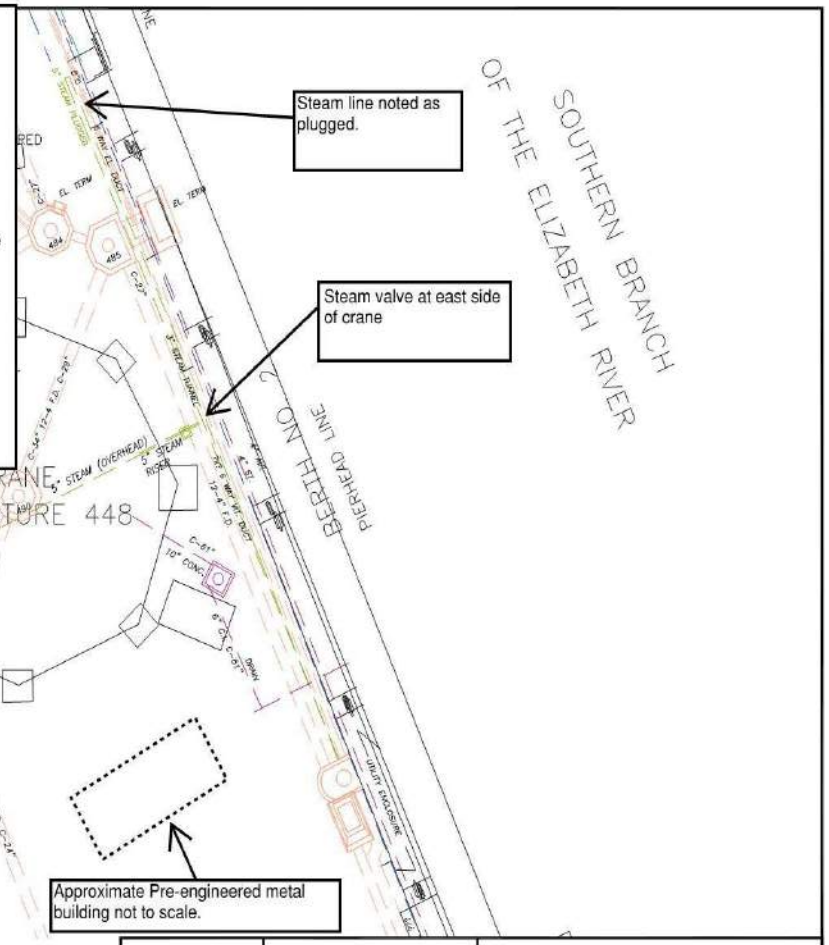

DISCLAIMER NOTE:
Please note that the contents of the drawing are based on a combination of aerial photogrammetrical surveys, topographical surveys, and data taken from record drawings. The information, details, and location of items contained in the drawing are believed to be accurate within plus/minus 0.5 ft., but the burden for determining accuracy, completeness, and appropriateness for use rests solely on the user accessing this information. The user acknowledges and accepts all inherent limitations of the data, including the fact that they are dynamic and in a constant state of maintenance, correction, and revision.

DEPARTMENT OF THE NAVY
NAVAL FACILITIES ENGINEERING COMMAND
NAVFAC MIDLANT
PWD PORTSMOUTH PORTSMOUTH, VIRGINIA

GENERAL AREA MAP
NORFOLK NAVAL SHIPYARD PORTSMOUTH, VIRGINIA

SPEC. NO.: N/A
CONTRACT NO.: N/A
JOB NO.: –
DATE:
AIC/EIC:
DESIGNED: –
DRAWN:
REVIEWED: –
MAXIMO NO. N/A
NAVFAC DWG. NO. –
SKETCH SHEET 1 OF 1

FILE NAME: N:\Maps\NNSY\Station Map for Site Plans\NNSY-site-map.dwg LAYOUT NAME: 11X17 PLOTTED: Tuesday, July 03, 2012 - 1:28pm

10-3
Cost Summary

10-3 Cost Summary

Mothball Alternative

Initial Costs		
Preparation	*$233,173*	
Engineering & NEPA Support	*$301,421*	
Total Initial Costs		$534,594
Operating, Maintenance & Repair Costs		
OM&R of $14,920 at PV over 20 years	*$237,079*	
Total Operating Maintenance and Repair Costs		$237,079
Total Mothball Alternative Cost		**$771,673**

Demolition Alternative

Initial Costs		
Preparation / Demolition / Salvage	*$1,400,513*	
Engineering & NEPA Support	*$336,260*	
Total Initial Costs		$1,736,773
Operating, Maintenance & Repair Costs		
OM&R over 20 years	*N/A*	
Total Operating Maintenance and Repair Costs		$0
Total Demolition Alternative Cost		**$1,736,773**

Additional Cost for Demolition Alternative versus Mothball Alternative **$965,100**

ATTACHMENT 11
Detailed List of Salvageable Materials and Machinery

ATTACHMENT

Table of Contents

Attachment 11 – Detailed List of Salvageable Materials and Machinery

ATTACHMENT 11 – LIST OF SALVAGEABLE EQUIPMENT

The following items are installed on the hammer head crane system at the Norfolk Naval Station and may be available for removal and sale. Each component would need to be disassembled and removed from either the 350 LT hammer head crane or the 15 LT revolving crane which is mounted on top of the 350 LT hammer head crane.

11-1 BASE MOUNTED WINCHES

11-1-1 350 LT Hammerhead hoist assembly A & B (two drum base mounted winch)

- 49,000 pound rated line pull per rope with two ropes per drum, horizontal departure
- Heyl & Patterson drawing C-2685-5
- Rated rope speed 61.5 feet per minute
- Two flanged drums of 120 inch pitch diameter, two grooves for 1 ½" wire ropes, each with 50 wraps total
- Each drum independently driven by one 135 hp, 400 rpm DC motor, two solenoid operated shoe motor brakes, enclosed 19.88:1 ratio gear reducer and drum open spur gears
- Electric clutch on high speed shaft capable of linking the two hoists
- Base frame size, 46' – 0" long x 19' – 0" wide
- Estimated weight, approximately 270,000 pounds

11-1-2 350 LT Hammerhead hoist assembly C (single drum base mounted winch)

- 28,000 pound rated line pull with two (lead lines) ropes, horizontal departure
- Heyl & Patterson drawing C-2685-6
- Rated rope speed 55.5 feet per minute
- One flanged drum of 84 inch pitch diameter, two grooves for 1 ½" wire rope, each with 20 total wraps
- Driven by one 135 horsepower, 400 rpm DC motor, two solenoid operated shoe brakes on the motor shaft, enclosed 19.88:1 enclosed gear reducer and drum mounted open spur gears
- Base frame size, 17' – 9" long x 10' – 2" wide.
- Estimated weight, approximately 80,000 pounds

11-1-3 15 LT Revolving crane hoist assembly (single drum base mounted winch)

- 18,800 pound rated line pull, single rope, horizontal departure
- Heyl & Patterson drawing C-2685-10
- Rated rope speed, 232 feet per minute at rated load
- Single flanged drum of 45 inch pitch diameter, single groove for 1 ¼" wire rope, with 47 wraps total
- Driven by one 135 horsepower, 400 rpm DC motor, two solenoid shoe brakes on motor shaft, enclosed 19.88:1 enclosed gear reducer, with drum mounted on extended reducer output shaft
- Estimated weight, approximately 24,000 pounds

11-2 Motor – Generator Set

- Description by others

11-3 Hook Blocks

11-3-1 A and B blocks (quantity 2)

- 175 long ton capacity ram (double) hook
- Heyl & Patterson drawing number C-2685-18
- Eight 45"pitch diameter sheaves grooved for 1 ½" rope with Timken tapered roller bearings
- One block is 7'-8" wide, the second is 8'-10 wide
- Estimated weights, approximately 21,200 pounds, and approximately 22,400 pounds

11-3-2 C block (quantity 1)

- 50 long ton capacity hook
- Heyl & Patterson drawing number C-2685-19
- Two 45"pitch diameter sheaves grooved for 1 ½" rope with Timken tapered roller bearings
- Estimated weight, approximately 5,000 pounds

11-3-3 15 ton revolver block (quantity 1)

- 15 long capacity single hook
- Heyl & Patterson drawing number C-2685-93
- One 37 ½" pitch diameter sheave grooved for 1 ¼" rope with Timken taper roller bearings
- Estimated weight, approximately 2,150 pounds

11-4 SLIP RING ASSEMBLIES

11-4-1 350 LT Hammer head crane slip ring assembly

- Eleven (11) slip rings with varying number of brushes per ring
- Heyl & Patterson drawing number C-2685-15
- Two pairs of bronze rings with twelve brushes and 800 amps per ring, plus three lighting circuit rings with three brushes and 74 amps per ring at 230 V, and four telephone circuit rings with two brushes per ring; all brushes mounted on copper (#1 alloy) circular bases
- Assembly is 47.25" tall by approximately 22.5" in diameter

11-4-2 15 LT Revolver crane slip ring assembly

- Thirty nine (39) bronze (#5 alloy) rings with varying numbers of brushes per ring mounted on copper (#1 alloy) circular bases
- Heyl & Patterson drawing number C2685-74
- Assembly is 91 3/8" tall by approximately 20" diameter
- Manufactured by Westinghouse Electric in 1939

11-4-3 25 ST Service crane

• Single hook capacity	25 tons
• Hoist speed, first wrap	12.8 FPM
• Hoist speed, second wrap	13.7 FPM
• Trolley speed	115 fpm
• Bridge speed	53 FPM
• Span between bridge rails	28' – 8"
• Designed for bridge rails	70# ASCE
• Lift height	186" – 0"
• Trolley gage	120"
• Clearance height above rails	6' – 3"
• Operator's cage	
• Hook approach Operator's side	3' – 2"
• Hook approach opposite Op side	3' – 6"
• Electrical power supply	250 VDC, 100 Amp
• Shaw-Box 1939 drawing No.	3-203-300
• Harvey Hubble 1980 mod.	C-76257

11-4-4 15 LT Revolver crane festoon system (trolleys and flexible cables)

- Per attached Wampfler drawing C340-99-F003 REV 1

11-4-5 350 LT Hammer head operator's cabs

- Fully enclosed steel operator's cab
- Heyl & Patterson drawings C-2685-47, -48 & -49
- Floor area: 6' – 6 ¼" w x 5' – 0" deep (below lower sloping window)
- Upper cross section: 6' – 6 ¼" w x 9' – 6 ½ deep x 7' 10" tall
- Glass windows
- Hinged door
- Chair, right and left console

11-4-6 15 LT Revolver operator's cab

- Fully enclosed steel operator's cab
- Heyl & Patterson drawings C-2685-75 & -76
- Floor area: 6' – 0 ¼" w x 5' – 0" deep (below lower sloping window)
- Upper cross section: 6' – 0 ¼" w x 7' – 6" deep x 9' 5 ½" tall
- Glass windows
- Hinged door
- Chair, right and left console

11-5 SHEAVES

11-5-1 Sheaves, quantity 24

- 45 inch pitch diameter, grooved for 1 ½" wire rope
- Heyl & Patterson part drawing 19344 - L-883
- Cast steel, Class "B" (Navy Spec 49 Sli)
- Machined to fit two Timken bearings cone 81600 – cup 81962
- Finished weight, approximately 545 pounds without bearings
- Mounted on hammer head trolleys "A", "B", & "C"

11-5-2 Fixed support sheaves, quantity 18

- 18 inch pitch diameter, grooved for 1 ½" wire rope
- Heyl & Patterson part drawing 19405 - L-883
- Cast steel, Class "B" (Navy Spec 49 Sli)
- Plane bronze bushings for 3" diameter shaft
- Finished weight, approximately 150 pounds
- Mounted on hammer head at center of rotation and on trolleys

11-5-3 Fleeting support sheaves, quantity 6

- 18 inch pitch diameter, grooved for 1 ½" wire rope
- Heyl & Patterson part drawing 19405 - L-883
- Cast steel, Class "B" (Navy Spec 49 Sli)
- Plane bronze bushings for fleeting on 4" diameter shaft
- Finished weight, approximately 150 pounds
- Mounted on hammer head sheave support at front of Auxiliary Hoist Engine & CL rotation

ATTACHMENT 12
Matrix of Permit Agencies

ATTACHMENT

Table of Contents

Attachment 12 – Matrix of Permit Agencies
- 12-1 – Natural Resources of Concern
- 12-2 – VaFWIS Initial Project Assessment
- 12-3 – Removal or Relocation of Osprey Nests in Virginia
- 12-4 – Matrix of Permit Agencies

The Matrix of Permit Agencies contains columns identifying the type of permit or approval that could be required, an agency contact, an estimate of the permit fee, permit review time, a discussion of the instructions and requirements for the authorization and whether or not the authorization is expected to be required.

The listing was developed based on previous experience at NAVFAC facilities and on recent experience in acquiring regulatory permits and authorizations for various construction and demolition projects. At the direction of the NAVFAC MIDLANT Project Manager, direct contact, discussions and / or coordination with the regulatory authorities was not undertaken. Such coordination will be effected by the NAVFAC Planning Department, as appropriate, as the project progresses. On line research was, however, conducted with several natural resource agencies, such as the U.S. Fish and Wildlife Service, and the Virginia Department of Game and Inland Fisheries (VDGIF). The nature of the project / study was not identified during the on line research, although the general location of the project / study was provided in order to obtain information concerning the potential for impact to wetlands and to threatened and endangered species. The on line research included accessing the website for the Wildlife Diversity Division within the VDGIF in order to obtain information concerning the removal or relocation of Osprey nests in Virginia. The results of the on line research are discussed in the Matrix of Permit Agencies and included as Attachments to the matrix.

Active environmental operating permits were discussed with the Environmental Engineering Branch of the Norfolk Naval Shipyard. Currently there are air quality, water quality, and solid and hazardous waste permits under which the facility operates. These permits are listed in the Permit Matrix and may or may not need to be modified depending on the action selected. For example, should demolition be selected and large diesel sources are required to enable the demolition, the existing air quality may need to be amended. The Matrix of Permit Agencies has been developed with the understanding that as the Hammerhead Crane Study progresses, and the desired action becomes more refined, certain permits or authorizations may be eliminated and / or added. Following selection of the demolition or mothballing action and in consultation with the Virginia Department of Historic Resources, appropriate National Environmental Policy Act (NEPA) documentation will need to be prepared.

12-1
Natural Resources of Concern

U.S. Fish and Wildlife Service

Natural Resources of Concern

This resource list is to be used for planning purposes only — it is not an official species list.

Endangered Species Act species list information for your project is available online and listed below for the following FWS Field Offices:

```
VIRGINIA ECOLOGICAL SERVICES FIELD OFFICE
6669 SHORT LANE
GLOUCESTER, VA 23061 (804) 693-6694
http;//www.fws.gov/northeast/virginiafield/
```

Project Location Map:

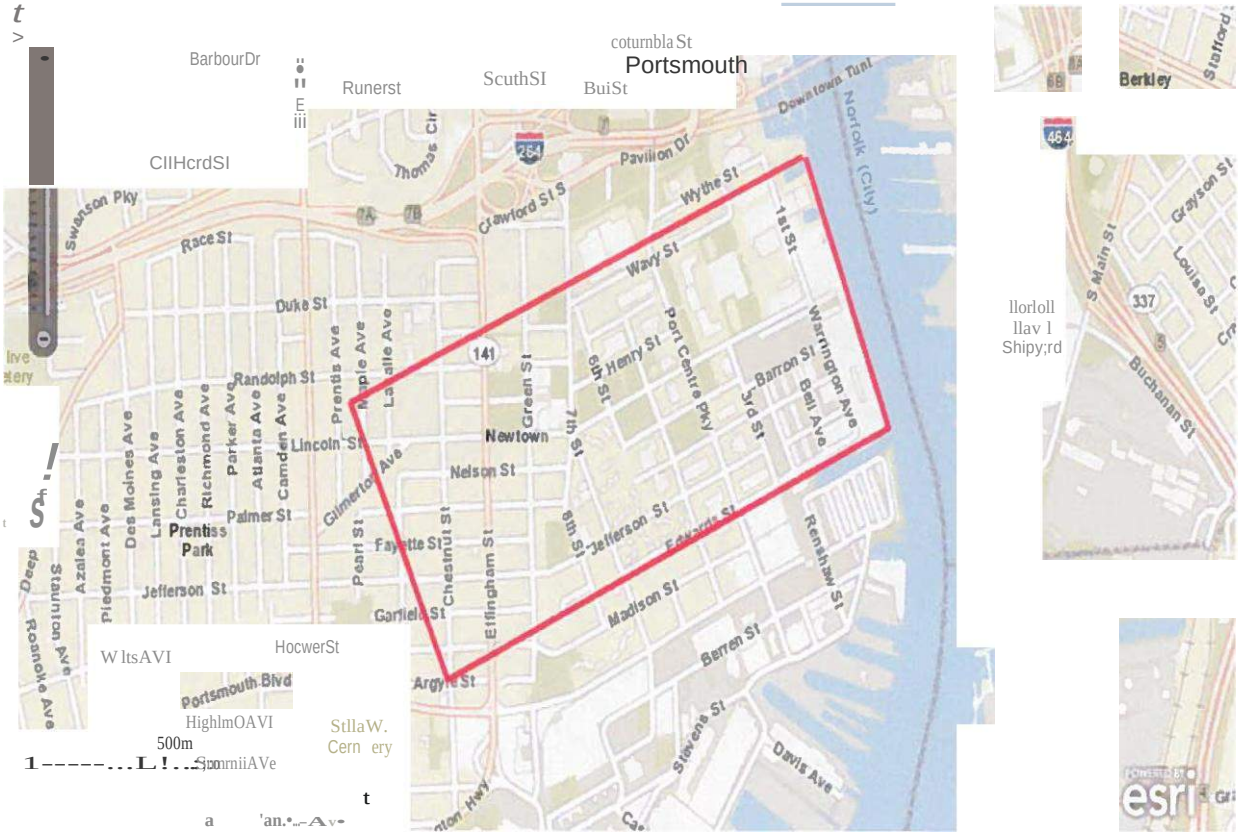

U.S. Fish and Wildlife Service

Natural Resources of Concern

Project Counties:

Portsmouth, VA

Geographic coordinates (Open Geospatial Consortium Well-Known Text, NAD83):

MULTIPOLYGON (((-76.3109837 36.8253352,-76.3076565 36.8194432,-76.2925015 36.8248235, -76.2953668 36.8305932, -76.2953689 36.8306007, -76.2953679 36.8306085, -76.295364 36.8306152, -76.2953578 36.83062,-76.2953503 36.8306221,-76.2953425 36.8306211,-76.2953358 36.8306172, -76.295331 36.830611,-76.2924557 36.8248211,-76.2924536 36.824813,-76.2924551 36.8248047, -76.2924598 36.8247978,-76.2924669 36.8247934,-76.3076589 36.8193999,-76.3076658 36.8193987, -76.3076726 36.8194, -76.3076786 36.8194035, -76.307683 36.8194089, -76.3110304 36.8253366, -76.3110329 36.8253449, -76.3110317 36.8253535, -76.3110269 36.8253608, -76.3110194 36.8253653, -76.2954595 36.8306377, -76.2954518 36.8306388, -76.2954442 36.8306367, -76.2954381 36.830632, -76.2954342 36.8306252, -76.2954331 36.8306175, -76.2954352 36.8306099, -76.2954399 36.8306038, -76.2954467 36.8305999, -76.3109837 36.8253352)))

Project Type:

Land - Management Plans

Endangered Species Act Species List (USFWS Endangered Species Program).

There are no listed species found within the vicinity of your project.

FWS National Wildlife Refuges (USFWS National Wildlife Refuges Program).

There are no refuges found within the vicinity of your project.

FWS Migratory Birds (USFWS Mieratory Bird Program).

Most species of birds, including eagles and other raptors, are protected under the Migratory Bird Treaty Act (16 U.S.C. 703). Bald eagles and golden eagles receive additional protection under the Bald and Golden Eagle Protection Act (16 U.S.C. 668). The Service's Birds of Conservation Concern <2008) report identifies species, subspecies, and populations of all migratory nongame birds that, without additional conservation actions, are likely to become listed under the Endangered Species Act as amended (16 U.S.C 1531 et seq.).

Natural Resources of Concern

NWI Wetlands (USFWS National Wetlands Invento0?.).

The U.S. Fish and Wildlife Service is the principal Federal agency that provides information on the extent and status of wetlands in the U.S., via the National Wetlands Inventory Program (NWI). In addition to impacts to wetlands within your immediate project area, wetlands outside of your project area may need to be considered in any evaluation of project impacts, due to the hydrologic nature of wetlands (for example, project activities may affect local hydrology within, and outside of, your immediate project area). It may be helpful to refer to the USFWS National Wetland Inventory website. The designated FWS office can also assist you. Impacts to wetlands and other aquatic habitats from your project may be subject to regulation under Section 404 of the Clean Water Act, or other State/Federal Statutes. Project Proponents should discuss the relationship of these requirements to their project with the Regulatory Program of the appropriate U.S. Army Corps of Engineers District.

U.S. Fish and Wildlife Service

National Wetlands Inventory

Norfolk Naval Shipyard

Dec 12,2012

Wetlands

- Freshwater Emergent
- Freshwater Forested/Shrub
- Estuarine and Marine Deepwater
- Estuarine and Marine
- Freshwater Pond
- Lake
- R1verine
- Other

Status

- Digital
- Scan
- Non-Digital
- No Data

Thla m• la r.. ..,.... ,.,....,_ only. The us Flah and Wildlife Serlfoe la not raponalble for the accuracy or cu,....,.... ..of the baH data ahown on thla m•p.All wdanda rellltld data ahould be uaM In IICCOI'dance with the layw met:aclatl found on 11M W-nd•Mapper-blll.._

User Remarks:

USFWS Online Wetland Mapper

12-2
VaFWIS Initial Project Assessment

Virginia Department of Game and Inland Fisheries

Fish and Wildlife Information Section and VaFWIS Initial Project Assessments

We appreciate your interest in submitting a project for review by VDGIF to ensure the protection of sensitive wildlife resources during project development. Due to staffing limitations and other program responsibilities, however, our Fish and Wildlife Information Services Section (FWIS) is currently unavailable to review or provide Initial Project Assessment (IPA) of proposed projects, such as:

- Cell towers
- Private developments
- USDA NRCS projects
- USDA Rural Development projects
- Infrastructure upgrades
- Land acquisitions

These projects may, however be reviewed by the Department's Environmental Services Section (ESS) during the Project and Permit Review Process

Though FWIS is no longer available to assess your project, nor to confirm your findings, we recommend that you conduct a preliminary desktop analysis to evaluate your project's potential impacts upon the Commonwealth's wildlife resources by accessing our online VaFWIS system and using the Geographic Search function to generate an Initial Project Assessment (IPA) report. We recommend the following steps:

1. Subscribe to the Virginia Fish and Wildlife Information Service (VaFWIS), an online database providing access to the most current and comprehensive information about Virginia's wildlife. A subscription to the VaFWIS allows you to perform an Initial Project Assessment (IPA) to

evaluate the wildlife resources and VDGIF facilities that are located within 2 miles of your project site. We recommend this IPA be included in all project documentation and permit applications.

OR

Access the free Virginia Fish and Wildlife Information Service (VaFWIS) as a visitor. No subscription is necessary to use the VAFWIS as a visitor which allows one access to generate a list of wildlife species that may be documented within 3 miles of the project location.

2. Review the VaFWIS Coordination Recommendations to determine if you need to coordinate with VDGIF or other agencies regarding wildlife species and resources documented from your search area and perform the recommended coordination.

Neither FWIS nor ESS personnel are available to confirm VaFWIS subscriber findings or provide an evaluation of how the project may impact such resources, unless the project is reviewed through an interagency coordination process, in which case ESS will coordinate the Department's review of your project. Please note that this does not constitute endorsement of your project or a lack of concern regarding anticipated project impacts; it simply means that, given our workload and other program responsibilities, VDGIF is currently unable to accommodate such requests for project evaluation.

VaFWIS Contact:
Shirl Dressler, Program Support Technician
(804) 367-6913 or Shirl.Dressler@d gif.virginia.gov

Additional Resources:

- VaFWIS Coordination Recommendations (PDF)

- © 2012 Virginia Department of Game and Inland Fisheries
- Contact Us | Web Policy
- WAI-A Compliant

- Translate This Page:
-
-
-
-
-

VaFWIS - Department of Game and Inland Fisheries

36,49,33.0 -76,17,35.4
is the Search Point
(Submit) [Cancel)

Search Point
- Change to "clicked" map point
- Fixed at 36,49,33.0-76,17.35.4

Show Position Rings
Yes No
1/4 mile and 1/16 mile at the Search Point

Show Search Area
Yes - No
3 Search distance miles
adius

Search Point is at map center

Base Map
Color Aerial Ph tography

Map Overlay Choices
Current List: BAEANests, BECAR, Position

Map Overlay Legend

Position Rings
1/4mlla and
1/16 mie ill:the
Seardl Point

Bald Eagle
COnr:entratlon Areas
andRooatB

@Bald Eagle nestB
660 and 330 foot
rnanagernent zones

N

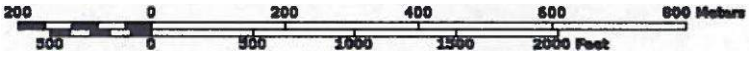

1

Point of Search 36,49,33.0 -76.17,35.4
Map Location 36,49,33.0 -76,17,35.4

Select Coordinate S)stem:
- Degrees.Minutcs.Seconds Latitude - Longitude
- Decimal Degrees Latitude- Longimde
- Meters UTM NAD81 East North Zone
- Meters UfM NAD27 East North Zone

Base Map source: Color Aerial Photography 2002 - Virginia Base Mapping Program, Virginia Geographic lnfonnntion Network

Map projection is UTM Zone 18 NAD 1983 with left 383875 and top 4077133. Pixel size is 2 meters . Coordinates displayed arc Degrees, Minutes, Seconds North and Wcst.Map is currcllly displayed as 800 columns by 800 rows for a total of 640000 pixies. The map display represents 1600 meters east to west by 1600 meters north to south for a total of 2.5 square kilometers. The map display reprcsellls 5250 feet eat to west by 5250 feet north to south for a total of 0.9 square miles.

Topographic maps and Black and white aerial photography for year 1990+-
are from the United States Department of the Interior, United States Geological Survey.
Color aerial photography aquired 2002 is from Virginia Base Mapping Prograntt, Virginia Geographic Information Network.
Shaded topographic maps are from TOPO! ©2006 National Geographic
http://www.national.geographic.com/topo
All other map products are from the Commonwealth of Virginia Department of Game and Inland Fisheries.

map assembled 2012-12-17 08:40:53 (qa/qc December 5, 2012 8:04- m=439779
dist=4828.032 Visitor)
$poi=36.7508333 -75.9786111

| !2il]E | |:r!:|||l! | | Contact shir!.dn:::: <ler@'d•if_ ,-irsinin.gm· !Please view our prjyxy oolky |
© 1998- 2012 Commonweallh of Virginia Departmem of Game and Inland Fisheries

12-3
Removal or Relocation of Osprey Nests in Virigina

Removal or Relocation of Osprey Nests in Virginia:

A Guideline for Landowners

June 2010

David Giblotl

Virginia Department of Game and Inland Fisheries
Bureau of Wildlife Resources
Wildlife Diversity Division
Nongame and Endangered Wildlife Program
Richmond, VA 23230

Removal or Relocation of Osprey Nests in Virginia:

A Guideline for Landowners

June 2010

This report may be cited as follows:

Virginia Department of Game and Inland Fisheries. 2010. Removal or relocation of osprey nests in Virginia: *A guideline for landowners.* Virginia Department of Game and Inland Fisheries, Bureau of Wildlife Resources, Wildlife Diversity Division, Nongame and Endangered Wildlife Program. Richmond, VA. 8 pp.

This report was completed with funds provided under the Federal Aid in Wildlife Restoration Program

Removal or Relocation of Osprey Nests in Virginia:

A Guideline for Landowners

Introduction

The Virginia Department of Game and Inland Fisheries (VDGIF, Department) and the U.S. Fish and Wildlife Service (USFWS), respectively, exercise state and federal authority over conservation and management of ospreys *(Pandion haliaetus)* in Virginia. The VDGIF, in consultation with USFWS and with the Virginia Wildlife Services office ofthe U.S. Department of Agriculture (USDA/WS), has developed the following guidance to ensure that problematic osprey nests are managed in a consistent and lawful manner in Virginia. These guidelines address laws that pertain to protection of ospreys and their nests, osprey nest removal, and construction and placement of alternative nest platforms, and may be modified as appropriate to address individual situations. They are intended to inform landowners and land managers of regulations and protocols for addressing problematic osprey nest situations: they are not regulatory in themselves and they are not intended to supplant onsite review or consultation, nor to address programmatic or regional issues such as Bird Aircraft Strike Hazard (BASH) management.

The Chesapeake Bay historically has been recognized as supporting one of the largest populations of ospreys in the world (Henny et al. 1974, Watts and Paxton 2007, Glass and Watts 2009). Habitat loss, egg collection, persecution, and shooting contributed to population declines from the mid-1800s through the 1930s, however (Henny et al. 1977, Watts and Paxton 2007); and, during the post- World War II era, the Bay osprey population (as elsewhere) declined dramatically due to pesticide-induced reproductive suppression (Henny et al. 1977, Watts and Paxton 2007). The population reached an estimated low of about 1,450 pairs in the early 1970's (Henny et al. 1974), but then began to recover after banning of DDT and related pesticides. Surveys during the mid-1990s in Maryland and Virginia indicated significant recovery, and the Chesapeake Bay regional population was then estimated at nearly 3,500 breeding pairs (Watts et al. 2004, Watts and Paxton 2007). More recent data suggest a current Chesapeake Bay population of at least 6,000 pairs (Dr. Bryan Watts, pers. comrn. June 2010). The recovery has not been consistent geographically throughout the bay, however, with low-salinity and tidal-fresh reaches exhibiting much larger population increases than higher salinity reaches over the last 40 years, evidently in response to availability of high-quality food resources (Watts et al. 2004, Watts and Paxton 2007, Glass and Watts 2009).

As elsewhere, ospreys in Virginia have benefited from exploitation of artificial nest supports (e.g. channel markers, nest platfonns, duck blinds, and dock pilings). Virtually all osprey nest accounts prior to 1950 reported nests in 1iving or dead trees, but by the 1990's over ninety percent of all nests in Chesapeake Bay were built on man-made structures (Watts and Paxton 2007). Aside from banning of DDT and similar compounds, availability of man-made nesting substrates likely has been the most significant factor in recovery of the Chesapeake Bay osprey population (Watts and Paxton 2007).

The great majority of Virginia's ospreys are migratory, arriving from their winter haunts in the West Indies, Central America and South America in March and April, and then departing in August and September (Watts and Paxton 2007). Males typically arrive on their breeding territories one to two weeks before females, with mating activity commencing immediately after arrival of the female. Eggs are typically laid in April and are incubated by the female for 35-37 days. The young remain in the nest for approximately 8 weeks after hatching. Most young are capable of sustained flight by late June or early July; yet, after fledging from the nest, the young remain dependent on the parents for up to 2 months.

Laws Protecting Ospreys

Migratory Bird Treaty Act (16 U.S.C.§§ 703-712): This federal law (MBTA), first adopted in 1918, generally prohibits taking or attempting to take any migratory bird, nest, egg, or parts thereof, except as permitted by the USFWS. To *Take* is broadly defined as to pursue, hunt, shoot, wound, kill, trap, capture, possess, or collect any migratory bird species, their nests, or their eggs. In April 2003, however, the USFWS provided clarification (USFWS 2003) that destruction of inactive nests of migratory birds not otherwise protected *(i.e.,* bald or golden eagles, and Threatened or Endangered species) is not prohibited under the MBTA, provided that no possession occurs during the destruction of said nest. Nest destruction that entails possession of the nest, or that results in the unpermitted take of migratory birds or their eggs, though, remains illegal and fully prosecutable under the MBTA.

Under a federal Migratory Bird Special Purpose / Depredation Permit issued to VDGIF by the USFWS, the Department may salvage inactive nests and infertile eggs of migratory birds, and may collect for rehabilitation or euthanize sick, injured, or orphaned migratory birds including ospreys. Department employees also may trap and relocate ospreys, active nests, or eggs when the safety of the bird, nest, or eggs is at risk if they are not moved. Otherwise, however, the Department may only take uninjured, healthy birds or active nests with eggs or young in emergency situations when the adult birds, nests, or young pose a direct threat to human health or safety. Birds or active nests may not be taken under this permit for nuisance management purposes.

The Wildlife Services office of the U.S. Department of Agriculture, Animal and Plant Health Inspection Service (USDA/WS) also has authority from USFWS (and from VDGIF) to take migratory birds and their nests and young, specifically with regard to minimization or avoidance of aircraft strike hazards, and management of nuisance wildlife. Regarding ospreys, the USDA/WS staff in Virginia focuses on airport/aircraft safety issues in close consultation with VDGIF and USFWS, though they increasingly are being called upon to address "nuisance" osprey nest situations, with the cost normally borne by the affected landowner.

The Code of Virginia (§29.1-521): This statute and VDGIF regulation 4 VAC 15-30-10 generally protect all native birds and their nests, eggs, and young, except those subject to legal hunting or harvest under prescribed conditions. There is no provision in Virginia law or VDGIF regulations for legal hunting or harvest of ospreys, active osprey nests, eggs, or young (other than theoretical take of adults or young for falconry purposes). Though Virginia Code §29.1-

100, defines a "nuisance species" to include a species "... concentrated in numbers and manners as to constitute a health hazard or other nuisance" and §29.1-511 then provides for year-round take of such "nuisance" animals, §29.1-100 specifically excludes any species protected by state or federal law (e.g., the federal MBTA) from the definition of a "nuisance species."

VDGIF regulation 4 VAC 15-30-50 provides authorization for Department employees, certain U.S. Government employees, and certain local government animal control officers to capture, temporarily hold or possess, transport, release, or euthanize wildlife (including problematic or nuisance species) in the performance of their official duties. Under this authority, though, such activities may only be conducted subject to the additional constraints of the Migratory Bird Treaty Act as discussed above.

Note also that, under the authority of Virginia Code §29.1-103, §29.1-50 I, and VDGIF Regulation 4 VAC 15-30-50, the Department issues Commercial Nuisance Animal Permits to qualified individuals for capture, possession, transport, release, and euthanasia of wildlife that are causing damage to property, causing refuse problems, or posing a risk to human health or safety. Ospreys, however, as a protected species under the Migratory Bird Treaty Act discussed above, are specifically excluded (General Condition 5(B)iii) from the authorities granted by these permits. Thus, it is unlawful for Commercial Nuisance Animal Pennit holders to remove or relocate ospreys, or their active nests or young, under these permits.

Osprey Nest Relocation or Removal

Inactive Nests: An inactive nest is defined as a nest without any eggs or dependent (flightless) young and includes nests under construction. Inactive nests should only be removed if the nest or placement of the nest poses a threat to property integrity, human health, or safety. No authorization or consultation is required for removal of inactive nests from 16 September through 15 April, though affected landowners may call VDGIF or USDA/WS to informally consult on pending removals or relocations if they so desire. It can be very difficult to discern the status of a nest from below: thus, from 16 April through September 15, inactive nests should only be removed upon written confirmation of nest status (as inactive) by VDGIF or USDA/WS.

Active Nests: An active nest is defined as a nest containing eggs or occupied by dependent (flightless) young. All reasonable measures to protect an active nest until the young fledge must be considered before authorization to relocate or remove the nest is sought. Removal of active nests is generally not permitted, but a nest may be relocated or removed if it poses a direct threat to human health or safety; or when the birds, nest, or eggs themselves are threatened unless they are moved. In rare situations, relocation or removal of a nest that merely constitutes a nuisance may be authorized if it interferes with the intended use of the structure.

Anyone seeking to have an active nest relocated or removed must contact the VDGIF, the USFWS, or the USDA/WS in advance. To comply with Virginia law and VDGIF regulations, active nest relocation or removal may only be undertaken by an authorized federal, state, or local employee in the performance of their official duties as provided in 4 VAC 15-30-50, or by an individual authorized by USFWS for the nest removal. To comply with federal law, active nest

relocation or removal may only be undertaken by an individual authorized by the USFWS for the relocation or removal. Individuals interested in applying for a USFWS permit to remove or relocate an active nest may do so at:
http://www.fws.gov/migratorybirds/mbpennits/ApplicationForms.html.

Replacement Nesting Platforms: We strongly recommended that a replacement nesting platform be erected any time an osprey nest is removed. Replacement platforms ensure that a preferred nest site is not "lost" from the regional population, and also may reduce the likelihood of the resident pair renesting on the original platform or structure. The following guidance applies to siting and construction of replacement nest structures (see Fig. l for details regarding platform construction):

I. The replacement platform should be as tall as or taller than the original nest support, but not less than IS feet above the ground or normal water elevation.

2. The replacement platform should be located as close as possible to the original nest site; preferably within 150 feet of the original nest site, and no more than 300 feet distant.

3. The replacement platform should be in an exposed location (*i.e.*, not under or within the canopy of a tree or other shelter).

4. The platfonn support should be strong enough to support a 200-pound nest.

5. Nest platforms should be circular or oval, or of any convex polygonal shape with more than three sides, with a minimum width of 3 feet in any horizontal dimension.

6. If feasible, old nests should be relocated intact onto the new platform. When this is not feasible, sticks from the old nest should be roughly arranged on the platform in the shape of a nest.

7. The original nest support or substrate should be modified to discourage ospreys from rebuilding a nest at the site.

Contact Information

Virginia Department of Game and Inland Fisheries
Bureau of Wildlife Resources
Wildlife Diversity Division
Nongame and Endangered Wildlife Program
4010 West Broad Street
P.O. Box 11104
Richmond, VA 23230-1104
Phone: 804-367-6913
FAX: 804-367-2427
www.dgif.virginia.gov

United States Department of Agriculture
APHIS / Wildlife Services
P.O. Box 130
Moseley, VA23120
Phone: 804-739-7739
FAX: 804-739-7738
http://www.aphis.usda.gov/wildlife_damage/state_office/virginia_info.shtml

Literature Cited

Glass, K.A. and Brian D. Watts. 2009. Osprey diet composition and quality in high-and low-salinity areas of lower Chesapeake Bay. J. Raptor Res. 43(1):27-36.

Henny, C.J., M.M. Smith, and V.D. Stotts, 1974. The 1973 distribution and abundance of breeding ospreys in the Chesapeake Bay. Chesapeake Sci. 15:125-133.

Henny, C.J., M.A. Byrd, J.A. Jacobs, P.D., McLain, M.R. Todd, and B.F. Halla. 1977. Mid-Atlantic coast osprey population: present numbers, productivity, pollutant contamination, and status. J. Wildl. Manage. 41(2):254-265

National Wildlife Federation. 1987. Raptor Management Techniques Manual. National Wildlife Federation Scientific and Technical Series No. 10. 420 pp.

U.S. Fish and Wildlife Service. 2003. Migratory Bird Permit Memorandum MBPM-2. U.S. Department of the Interior, Fish and Wildlife Service, Washington, D.C. 2 pp.

Watts, B., M.A. Byrd, and M.U. Watts. 2004. Status and distribution of breeding ospreys in the Chesapeake Bay: 1995-1996. Journal ofRaptor Research 38:47-54.

Watts, B.D. and B.J. Paxton. 2007. Ospreys ofthe Chesapeake Bay: population recovery, ecological requirements, and current threats. Waterbirds 30(Special Publication 1):39-49.

OSPREY NEST PLATFORM

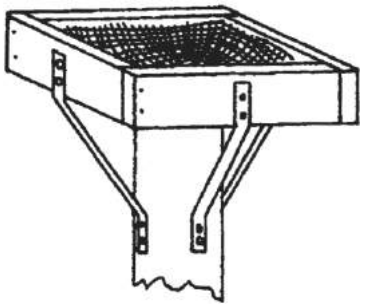

LUMBER: One 12• x 12• x 1/a• eX1erior plywood
One 2. x S• x 12' cedar board
One 20' or 30' cedar support post
One 2x S•xs• cedar board

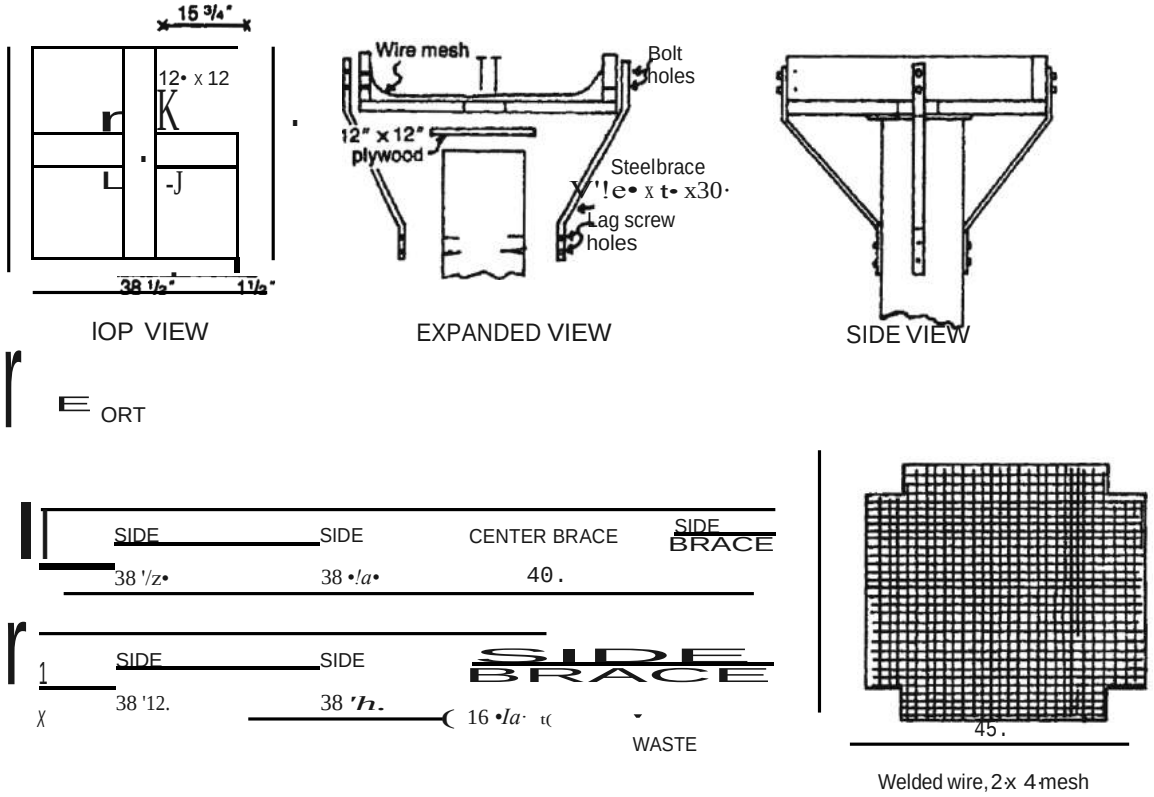

Fig. I. Diagram for an osprey nest platform. To construct the platform, the following materials are required: (I) 2" x 6" x 12' cedar board; (1) 2" x 6" x 8' cedar board; (I) 12" x 12" x W' exterior plywood; (1) 45" X 45" piece ofheavy duty wire mesh; (20) galvanized 40D nails; (4) Ys" x I" x 30" steel strapping; (8) 2 Y:z" x Y:z" bolts with washers and nuts; (8) 4" x Y:z" lag screws; (1) 6" or 8" diameter cedar post, 20' to 30' long; and wood preservative and stain. To prevent splitting, pre-drill all nail and bolt holes. Treat the entire structure with wood preservative and stain brown. To encourage use by ospreys, wire several sticks into the platform (National Wildlife Federation 1987; used with permission).

12-4
Matrix of Permit Agencies

Permit / Approval	Agency Contact	Fee	Review Time	Instructions / Requirements / Comments	Required?
Federal					
U.S. Army Corps of Engineers Individual Permit or Nationwide Permit 18	US Army Corps of Engineers Norfolk District 830 Front Street Norfolk, Va 23510 Phone: 757-201-7652 Robert Berg	None	Individual 9 months Nationwide 45-60 days	▪ If no fill or discharge to wetlands, then no permit required. ▪ If fill or discharge is required and is temporary or 1/10 acre or less, then covered under NW 18 ▪ If fill or discharge is required and is permanent or greater than 1/10 acre, then covered under Individual	No
Local Notice to Mariners	Commander Fifth Coast Guard District 431 Crawford Street Portsmouth, VA 23704	None	N/A	If barge traffic due to demolition activities affects the designated channel, a Local Notices to Mariners would be required. Local Notices to Mariners are a means by which the Coast Guard disseminates navigation information for the United States, its territories, and possessions. A Local Notice to Mariners is issued by each Coast Guard District and is used to report changes and discrepancies to aids to navigation maintained by and under the authority of the Coast Guard. Local Notices to Mariners contain other marine information such as channel depths, **naval operations**, regattas, etc., which may affect vessels and waterways within the jurisdiction of each Coast Guard District. Reports of channel conditions, obstructions, menaces to navigation, danger areas, new chart editions, etc., are also included in the Local Notice to Mariners.	Possibly
National Environmental Policy Act (NEPA) Document / Action	Virginia Department of Historic Resources 2801 Kensington Avenue Richmond, VA 23221 (804) 367-2323	None	One Year	Federal agencies are required by the National Historic Preservation Act, the **National Environmental Policy Act,** and other provisions of Federal law to consider historic resources in the planning and execution of their projects. If adverse effects are identified, the Federal agency must consult on ways to avoid, minimize, or mitigate those effects. The process is consultative and there is no prescribed outcome. An Environmental Assessment or an Environmental Impact Statement would be required.	Yes
U,S. Fish and Wildlife Service Natural Resources of Concern	Virginia Ecological Services The Virginia On-Line Project Review http://www.fws.gov/northeast/virginiafield/endspecies/Project_Reviews.html	None	On-Line	There are no listed species contained on the Endangered Species Act Species List within the vicinity of the project. There are no refuges contained on the FWS National Wildlife Refuges List within the vicinity of the project. Other than the Southern Branch of the Elizabeth River, there are no wetlands identified on the US Fish and Wildlife Service National Wetlands Inventory mapping in the vicinity of the project area. **Refer to Attachment 12-1: Natural Resources of Concern**	Yes
State					
Clean Air -- New Source Review Permit No. 60326 Title V	Virginia Department of Environmental Quality 5636 Southern Boulevard Virginia Beach, VA 23462 (757) 518-2000	A fee would be required if the permit(s) required modification and would be determined based on the extent of the modification(s).		Activities that have the potential for air emissions would be required to ensure Maximum Available Control Technology (MACT) or Best Available Control Technology is used tp prevent any additional or unnecessary releases to the atmosphere. Tarps or shrouds would be an example.	Existing
Storm Water Virginia Pollutant Discharge Elimination Systsem (VPDES) Permit No. VA0005215	Virginia Department of Environmental Quality 5636 Southern Boulevard Virginia Beach, VA 23462 (757) 518-2000	None	N/A	It is not expected this permit would require modification for the proposed project. Activities would be required to institute measures to ensure contaminants such as hydraulic oils, , fuels, hazardous wastes/materials do not enter any nearby storm drain or river.	Existing

Permit / Approval	Agency Contact	Fee	Review Time	Instructions / Requirements / Comments	Required?
Solid Waste Permit by Rule -- Permit No. 135	Virginia Department of Environmental Quality 5636 Southern Boulevard Virginia Beach, VA 23462 (757) 518-2000	None	N/A	It is not expected this permit would require modification for the proposed project. All solid waste would need to be managed by the operating group. This can only be general trash (i.e., food waste, paper, etc.). Anything that could be considered recovery material / hazardous waste would be managed under the Hazardous Waste permit.	Existing
Hazardous Waste Permit for Hazardous Waste Storage RCRA Part B Permit No. VA1170024813	Virginia Department of Environmental Quality 5636 Southern Boulevard Virginia Beach, VA 23462 (757) 518-2000		N/A	Typically recovery materials (scrap wood, pallets, tires, etc.) and hazardous wastes would be handled by the NNSY and disposed through the use of its EPA Disposal ID.	Existing
Permit Application and Notification for Asbestos Removal and Demolition	Virginia Department of Labor and Industry Attention: Accounting / Finance Main Street Centre 600 East Main Street, Suite 207 Richmond, VA 23219 (804) 786-9865	The Asbestos Project Permit Fee is dependent on the quantity of asbestos to be removed and ranges from $50 for up to 160 square feet to 0.5% of the contract price.	Notification is required to be submitted 20 calendar days prior to start date	for a copy of the VA Department of Labor and Industry application form **Refer to Attachment 12-2: Permit Application and Notification for Asbestos Removal and Demolition**	Possibly
Notification of Asbestos Demolition Operations and Renovation Operations	USEPA ATTN: Asbestos Coordinator Region III Mail Code 3LC62 1650 Arch Street Philadelphia, PA 19103-2029	None	Notification is required to be submitted 20 calendar days prior to start date	The USEPA must be notified for demolition operations and renovation operations when the amount of RACM disturbed is at least 160 sq. ft.. / 160 ln. ft. / 35 cu. Ft. The Virginia Department of Labor Permit Application form may be used to fulfill this requirement.	Possibly
Permit Application and Notification for Lead Abatement and Renovation	Virginia Department of Labor and Industry Attention: Accounting / Finance Main Street Centre 600 East Main Street, Suite 207 Richmond, VA 23219 (804) 371-7634	The lead project permit fee is calculated as follows: The greater of $100 or 1% of the contract price, with a maximum of $500	Notification is required to be submitted 20 calendar days prior to start date	The lead project permit application is for the following projects: lead abatement, emergency lead abatement, lead renovation and emergency lead renovation For a copy of the VA Department of Labor and Industry application form **Refer to Attachment 12-3: Permit Application and Notification for Lead Abatement and Renovation**	Possibly
Cultural Resources Review (Section 106)	Virginia Department of Historic Resources 2801 Kensington Avenue Richmond, VA 23221 (804) 367-2323	None	45-60 days	The Virginia Department of Historic Resources is the State Historic Preservation Office (SHPO). The NAVFAC is expected to coordinate directly with the SHPO and to identify interested public organizations and historic preservation groups and provide opportunity to comment on proposed actions.	Yes

Permit / Approval	Agency Contact	Fee	Review Time	Instructions / Requirements / Comments	Required?
Threatened and Endangered Species Review	Virginia Department of Game and Inland Fisheries Fish and Wildlife Information Services Section Nongame and Endangered Wildlife Program 4010 W. Broad Street Richmond, VA 23230 804-367-6913	None	Currently Unavailable	Due to staffing limitations the Fish and Wildlife Information Services Section is currently unavailable to review or provide Initial Project Assessment (IPA) of proposed projects. Use the online VaFWIS Service instead. There are no Bald Eagle nests with 1/4 mile of the project area. **Refer to Attachment 12-4: VaFWIS Initial Project Assessment**	Yes
Threatened and Endangered Species Review	Virginia Department of Game and Inland Fisheries Bureau of Wildlife Resources, Wildlife Diversity Division Nongame and Endangered Wildlife Program 4010 W. Broad Street Richmond, VA 23230 804-367-6913	None	60 days	Removal or Relocation of Osprey Nests in Virginia Anyone seeking to have an active nest relocated or removed must contact the VGDIF. Active nest relocation or removal may only be undertaken by an individual authorized by the USFWS. For guidelines on Osprey removal or relocation **Refer to Attachment 12-5: Removal or Relocation of Osprey Nests in Virginia**	Yes
Threatened and Endangered Species Review	Project Review Coordinator DCR, Division of Natural Heritage 217 Governors Street, Richmond, VA 23219 Phone 804-371-2708	$90/site	45-60 days	The project review section reviews projects to identify potential impacts to natural heritage resources (rare animals, rare plants, exemplary natural communities and significant geologic features). In order to be able to review submitted projects, the following three items are needed: project description, USGS topographic map with project boundaries clearly delineated and a completed information services order form.	Yes
Project Coordination	Va Institute of Marine Science (VIMS)	None		The VIMS has a three-part mission to conduct interdisciplinary research in coastal ocean and estuarine science, educate students and citizens, and provide advisory service to policy makers, industry, and the public. The VIMS provides these services to Virginia, the nation, and the world.	To be determined
Habitat Management Permit	Virginia Marine Resource Commission 2600 Washington Ave, 3rd Floor Newport News, VA 23607 Julie 757-247-8028	$25 $100 for projects over $10,000.	2-3 months	The environmental permits issued by the Habitat Management Division are of three types; subaqueous or bottomlands, tidal wetlands, and coastal primary sand dunes. The division's authority and responsibilities emanate from Subtitle III of Title 28.2 of the Code of Virginia and specifically regulates physical encroachment into these valuable resource areas.	No. It is not expected encroachment into these areas will occur
VADOT	VADOT: Richmond District 2430 Pine Forest Drive, Colonial Heights, VA 23834 800-663-4188 804-524-6000 Brent Palard			TBD Determination as to whether or not permits or authorizations will be required from the VADOT will depend upon, among other items, the nature of the demolition materials, the route taken for the transportation of the demolition materials and the size and weight of the materials transport vehicle and payload.	TBD
Local					
Right-of way Permit / Utility and or Land Disturbance Permit	Local Jurisdiction			TBD Determination as to whether or not permits or authorizations will be required from the local jurisdiction will depend upon, among other items, the nature of the demolition materials, the route taken for the transportation of the demolition materials and the size and weight of the materials transport vehicle and payload.	TBD

ATTACHMENT 13
Cultural Resource Documentation

ATTACHMENT

Table of Contents

Attachment 13 – Cultural Resource Documentation
- 13-1 – Historic Narrative – Norfolk Naval Shipyard
- 13-2 – Historical Documentary Photographs
  - Photograph 1 – Hammerhead Crane (date unknown)
  - Photograph 2 – Heyl & Patterson Advertisement (1942)
  - Photograph 3 – Hammerhead Crane and the USS Missouri (1952)
  - Photograph 4 – Hammerhead Crane (1958)
  - Photograph 5 – Hammerhead Crane (ca. 1963)
  - Photograph 6 – Hammerhead Crane (1970)
- 13-3 – Physical Description – Hammerhead Crane
- 13-4 – Section 106 Coordination
  - 13-4-1 – Mothball Alternative
  - 13-4-2 – Demolition Alternative
- 13-5 – Bibliography

13-1
Historic Narrative
Norfolk Naval Shipyard

13-1 Historic Narrative – Norfolk Naval Shipyard

The Hammer Head Crane (Facility 448) is a contributing resource to the Norfolk Naval Shipyard Historic District, which is listed in the National Register of Historic Places. The Norfolk Naval Shipyard (NNSY) is an 811-acre complex located in the City of Portsmouth, Virginia (Rachleff: 7:1).

The Gosport Shipyard, which was founded in 1767 by Scottish immigrant Andrew Sprowle, forms the nucleus of the present facility; Sprowle located his shipyard south of the town of Portsmouth on the southern branch of the Elizabeth River (Rachleff: 7:1).

Following the capture of Portsmouth and the Gosport Shipyard in 1775 by American Colonial forces, the newly organized Commonwealth of Virginia soon confiscated the shipyard and used the facility to build vessels for its own navy. In May 1779, a British force commanded by Admiral Sir George Collier landed virtually unopposed in Portsmouth with a two-fold objective, (1) stop the steady flow of supplies from Hampton Roads to the Continental Army and (2) take control of the Gosport Yard. Gosport was burned to the ground (Rachleff: 8-2).

The US Constitution ratified in 1789 authorized Congress to "provide and maintain a navy." President George Washington and his Secretary of War Henry Knox authorized construction of new ships rather than utilize converted merchantmen; government agents and workers would construct the ships in leased facilities along the Atlantic coast, the locations of which included Portsmouth, New Hampshire, Boston, New York, Baltimore and the Gosport yard which was leased from the State of Virginia (Rachleff: 8-20).

In 1801, under the stewardship of Secretary of the Navy Benjamin Stoddert, the federal government purchased the shipyards at Portsmouth, New Hampshire; Boston, New York, Philadelphia, and the Gosport Shipyard. The Gosport facility was acquired from the Commonwealth of Virginia for 12,000 (Rachleff: 8-2, 3).

In 1825, Secretary of the Navy Samuel Southard, an active proponent of naval improvements, initiated inquiries about the possible locations of dry docks to be utilized for the construction, maintenance, and repair of ships, boats, and other watercraft. In 1826, the Boston and Portsmouth Virginia yards were selected as the two best sites for such structures. Noted Civil Engineer Loammi Baldwin, assisted by William P. S. Sanger, a future Chief of Naval Engineers, designed both facilities. The presence of a dry dock at the Gosport Yard guaranteed that it would become one of the leading shipyards in the nation, destined to play a considerable role in the future development of the US Navy (Rachleff: 8-4).

The Gosport Shipyard played its part in the early development of a steam-powered US Navy with the construction of the experimental vessel *USS Germ* in 1841, a horizontal-paddlewheel craft, and the *USS Union*, a steam schooner built in 1841–1842. Gosport grew noticeably during the middle decades of the 19th century. In the early 1850s, approximately 700 people worked there, and by 1860, almost 1,000 people were employed by the shipyard (Rachleff: 8-4).

As the only US Navy yard within reach of the Confederate forces, the Gosport Yard instantaneously acquired paramount importance as the nation moved towards Civil War. The shipyard contained all the resources necessary to maintain a fleet: a dry dock fit to accommodate any type of vessel; a foundry; boiler shop; large quantities of supplies, and ammunition and guns. Following Virginia's secession in April 1861, the shipyard commander Charles Stewart McCauley, anticipating a Confederate takeover, ordered the burning of the yard. When Virginia troops assumed control of Gosport, they found a shipyard badly damaged, but usable. When Virginia officially joined the Confederate States of America, the state relinquished control of the facility to the Confederate Navy (Rachleff: 8-5).

The Gosport Yard played a role in the development of shipbuilding which would forever change the course of naval warfare. The USS Merrimack having survived the fire with minimal damage was repaired and strengthened by the installation of three inch iron plates. Renamed the CSS Virginia the vessel's resulting confrontation with the USS Monitor at the nearby battle of Hampton Roads in March 1862 marked the first meeting in combat of ironclad warships (Rachleff: 8-5,6).

Union forces captured Portsmouth in May 1862. Isolated and outnumbered, the Confederate forces abandoned Gosport after laying it to waste. Only the dry dock, the officers' quarters, the foundry, and a boiler shop remained in usable condition. Back under the Union flag, Gosport was re-baptized the Norfolk Naval Yard to avoid confusion with the Portsmouth New Hampshire navy yard and for the duration of the war, it remained in a largely ruined condition (Rachleff: 8-6).

Navy Yard activities reflected a period of retreat for the US Navy in the decades following the Civil War. Most of the work performed in this post-Civil-War period consisted of building reconstruction. In these years, the yard mostly functioned as a small repair plant (Rachleff: 8-6).

In the late 19th and early 20th centuries, the transformation of the Norfolk Yard into a first-rate support facility capable of building and servicing a modern fleet proceeded haltingly. Although World War I brought tremendous growth for the US Navy, the horrors of war strengthened by the appeal of isolationism, lessened the will of both citizens and politicians to fund and expand the military (Rachleff: 8-7,8,10).

In a still isolationist United States of the late 1930s, the nation's military leaders voiced growing alarm over the increased aggression of Germany, Italy and Japan and increasingly believed war in both Europe and Asia was on the horizon with inevitable American participation. In the words of Vice Admiral James Laurence Kauffman U.S.N. "although clouds were gathering, the American public was loath to entertain possibility of involvement in another European War (Kauffman: 25).

Recognizing the international situation, President Franklin Roosevelt in his January 1938 State of the Union address cited the need for the nation to be "adequately strong in self-defense." Claiming America's armaments were inadequate for the purpose of national security FDR identified the

need for a significant increase in expenditures for military defense (Barksdale: 21; http://www.let.rug.nl/usa/presidents/franklin-delano-roosevelt/state-of-the-union-1938.php).

In response to the president's request, The United States Congress passed a deficiency bill in May 1938 "appropriating funds for the modernization and expansion of naval construction and repair facilities (Kniskern: 16).

Although they had undergone considerable expansion during World War I, none of the nation's navy yards was fully equipped to cope with the building and repair requirements of the two-ocean Navy of World War II, and most were considered congested, obsolescent, and poorly arranged (http://www.ibiblio.org/hyperwar/USN/Building_Bases/bases-8.html).

Between 1938 and 1945 a total of $590 million was spent to improve and upgrade navy yards throughout the United States under a comprehensive plan for the improvement of the US Naval shore establishment issued by the Chief of the Bureau of Yards and Docks in the fall 1938. During the naval buildup of the 1930s, both ship construction and repair facilities were improved at the Norfolk Yard. Included among this work were the refurbishing and updating the dry docks, renovating of outmoded industrial shops, and the building new industrial and transportation structures. For the Norfolk Naval Yard, the period between 1939 and 1945 meant a great leap forward in ship construction and repair as well as the fitting out of ships and vessels built in local civilian yards (Rachleff: 8-11).

The war effort required construction of many new facilities including two of the shipyard's most important structures: Facility 932 also identified as Dry Dock No. 8 was one of three "super dry docks" constructed at US Navy yards during this period and Facility 448, the Hammerhead Crane (Rachleff: 8-12).

To provide the means to allow for the anticipated heavy new construction, early in 1938 a Norfolk Navy Yard memorandum identified the need for a plant to construct battleship turrets. The Turret Plant as it was named was constructed in the northern portion of the navy yard in what was then known as North Landing and included three adjacent structures a Turret Assembly Building, Turret Welding Shop and the 350-ton Hammerhead Crane (Barksdale: 63-64). Mechanical plans and selected materials for the crane were supplied by Heyl & Patterson of Pittsburgh; structural designs and steel were provided by the American Bridge Company of nearby Ambridge, Pennsylvania. Attachment 13.2, Historical Documentary Photographs, provides a photographic illustration of the crane's history. Photographs 1 and 2 are courtesy of the Heyl and Paterson On-Line Photo Library (http://www.flickr.com/photos/heyl_patterson/). Photographs 3 through 6 are provided by the City of Portsmouth Naval Museum.

The Hammerhead Crane was one of two hammerhead cranes constructed at US Navy yards at this time, the second located off of the East River at the Brooklyn Navy Yard. The crane was capable of lifting 350 tons of equipment at one time. Other structures allowed the yard to carry out its ship repair and construction work more efficiently. These structures ranged from fireproof warehouses and industrial shops to medical buildings. Overall, a total of 55 industrial structures were

constructed at the Norfolk Yard between 1940 and 1945. In addition, 17 residential buildings were erected (Wisner; Rachleff: 8-12).

In 1939, navy yard employment increased from 3,500 to 7,600. With a congressional authorization in June 1940 for a 7 percent increase in the size of the US Navy, the shipyard began adding approximately 1,000 workers a month to its workforce reaching a peak of 43,000 in 1943 (Rachleff: 8:11, 12).

Admiral Felix Gygax, who assumed command of the Norfolk Navy Yard in August 1941, assessed the facility's role during the Second World War:

> "The Norfolk Navy Yard has the responsibility of keeping in the highest possible state of material effectiveness the ships of the fleet sent home for routine overhauling, emergency repairs or alterations to improve their fighting characteristics" (City of Portsmouth Naval Museum Library).

During these years, the shipyard witnessed the construction of 101 naval vessels; work was completed on approximately 6,850 US and allied ships (Barksdale: 118, 150).

Other vital functions performed by the Norfolk Yard during World War II included storage and management of all minesweeping equipment from the Atlantic and Gulf Coasts; assisting in the development of new technologies, such as the Mark 29 anti-torpedo devices, used by Liberty ships and tankers for torpedo protection; and the development and production of improved marine paints and varnishes, including the application of hot and cold plastic ship-bottom paints (Rachleff: 8-12).

In terms of real estate, World War II saw extension of the Norfolk Shipyard to the south (around Dry Dock No. 8) and the east (into the Supply Area, or Barclay Tract, acquired in 1942). The yard's physical plant doubled in size. By the end of the war, the yard covered 747 acres, had between four and five miles of waterfront, and had 685 building. By 1945, the 20th-century ship building and repair facility that had begun to emerge during World War I had achieved maturity, and the Norfolk Yard had reached its maximum extension to date (Rachleff: 8-12).

The ships constructed and repaired at the Norfolk Navy Yard enabled a United States Navy crippled by the December 1941 attack on Pearl Harbor to recover from defeat, play a major role in the defeat of the Axis Powers and secure an Allied victory.

The end of the war in Europe in May 1945 and in the Pacific in August of that same year brought an end to the nation's feverish activity which had characterized US navy yards during the first half of the 1940s. On December 1 1945, the navy yard acquired its present name, the Norfolk Naval Ship Yard (NNSY) (Rachleff: 8-12).

During the Korean War, NNSY repaired or refitted almost 1,250 naval vessels and constructed two new wooden minesweepers. In the year's following, the NNSY's work consisted mainly of regular

ship repair and overhaul duties. As the US Navy entered the nuclear age, the survival of the older US Navy yards came to depend on their capacity to accommodate the new technology. Portsmouth, New Hampshire, Puget Sound and NNSY developed into nuclear age facilities (Rachleff: 8-12, 13).

Through the 1970s and 1980s, NNSY repaired, refitted, and overhauled ever more technologically advanced US Navy ships. Today, NNSY is the US Navy's largest east coast ship storage, repair, and distribution center, and performs approximately $650 million worth of work on Atlantic Fleet ships annually (Rachleff: 8-13).

In 2004, the Norfolk Naval Shipyard was determined eligible for listing in the National Register of Historic Places under National Register Criterion A owing to the significance of its association with development of the US Navy in the 19th and 20th centuries, and the evolution of US Navy Ships and the shipbuilding industry in the same period and under Criterion C as a distinguishable entity that embodies the distinctive characteristics of Naval architecture and engineering, both residential and industrial, between the years 1827 and 1945 (Rachleff: 8-1).

13-2
Historical Documentary Photographs

13-2 Historical Documentary Photographs

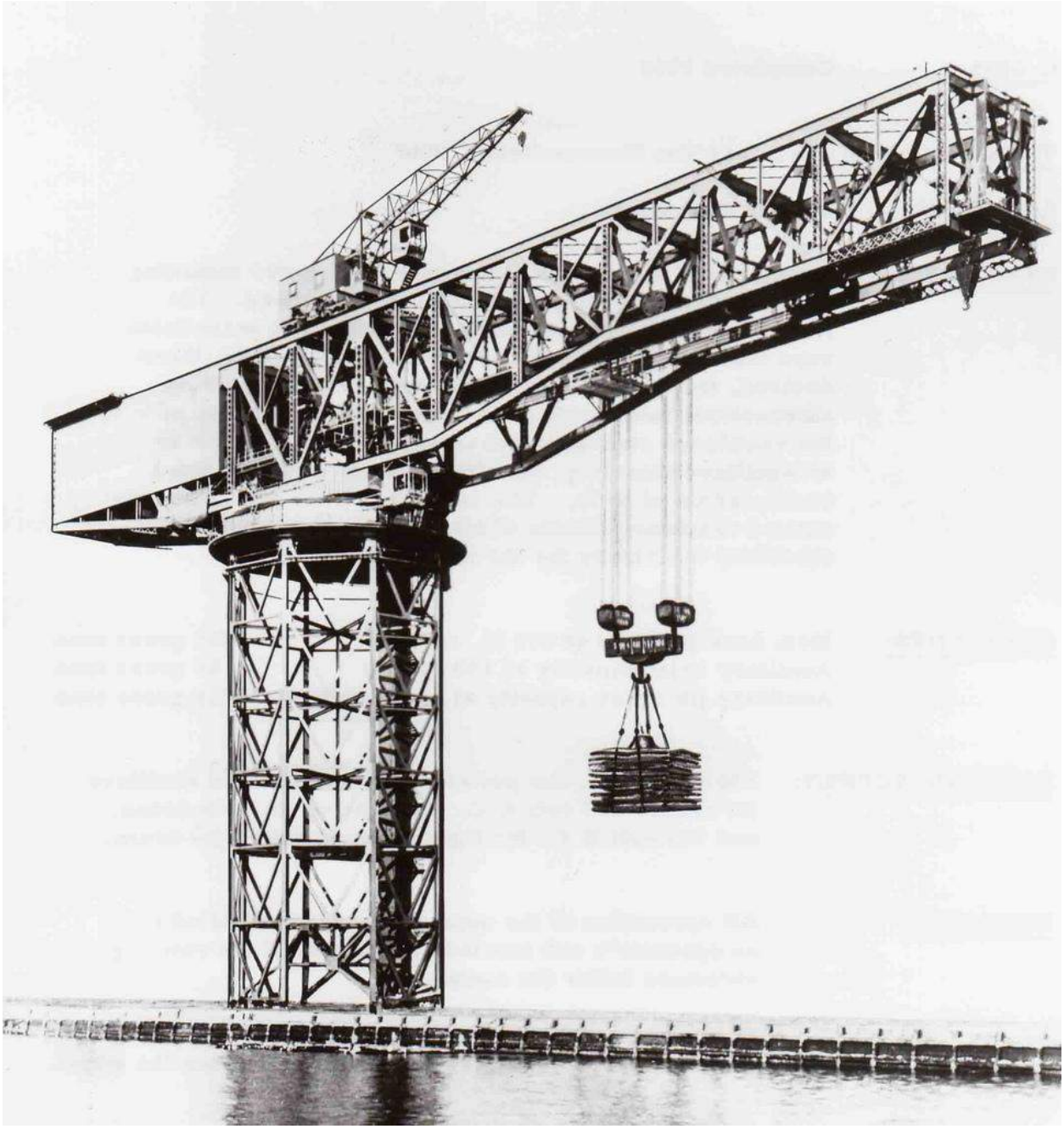

Photograph 1
Hammerhead Crane (date unknown).
Heyl & Patterson Flickr Website
http://www.flickr.com/photos/heyl_patterson/sets/72157629599396000/

For CRANES that help build SHIPS

Our plant has been presented with the Navy "E" Award for Production Achievement in the building of shipyard cranes.

Such an award is an honor—and also a challenge.

As a producer of specialized engineering equipment of this type we are especially gratified by this recognition of performance.

And having obtained the Navy "E" burgee we shall strive to even better our performance and to keep that burgee flying until Victory is achieved.

In addition to these Navy jobs, Heyl & Patterson continues to produce for the steel industry . . . ore bridges, railroad-car dumpers, coal and coke preparation plants and other equipment with which its name has been so long identified.

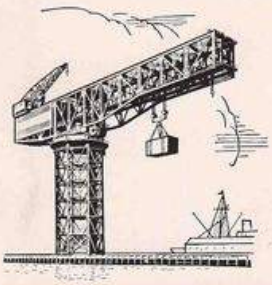

While our cranes help the Navy build ships, other Heyl & Patterson products speed the production of steel for the ships the Navy builds.

HEYL & PATTERSON INC.

50 WATER STREET PITTSBURGH, PA.

Captain L. N. Moeller, USN, Bureau of Yards and Docks, who presented the All-Navy "E" burgee, meets Jack Volke, veteran machinist, in the Heyl & Patterson plant.

Captain Frederick L. Oliver, USN (Ret), Inspector of Naval Material, Pittsburgh District, is shown a machining operation by Jack Yolton, Foreman, Machine Shop.

Reprinted from July 9, 1942 issue of *The Iron Age* and July, 1942 issue of *Blast Furnace & Steel Plant*

Photograph 2

Heyl & Patterson Advertisement (1942). (Heyl & Patterson Flickr Website)

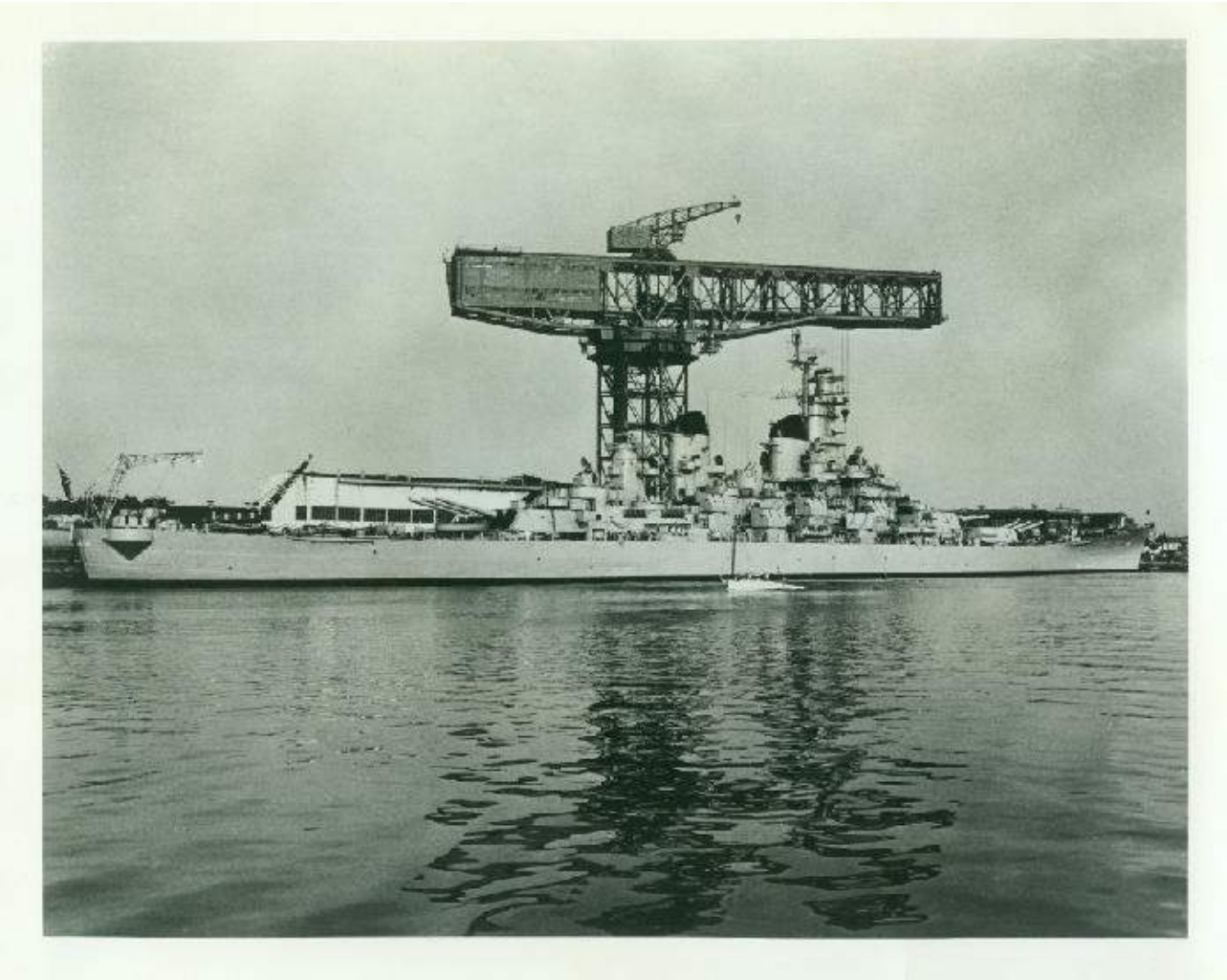

Photograph 3

Hammerhead Crane and the USS Missouri (1952).

Provided by the City of Portsmouth Naval Museum

I:\Projects\3015783\3015783_0001\60_Discipline Info\Environmental Permits SHPO Other Agencies\Historic Photographs

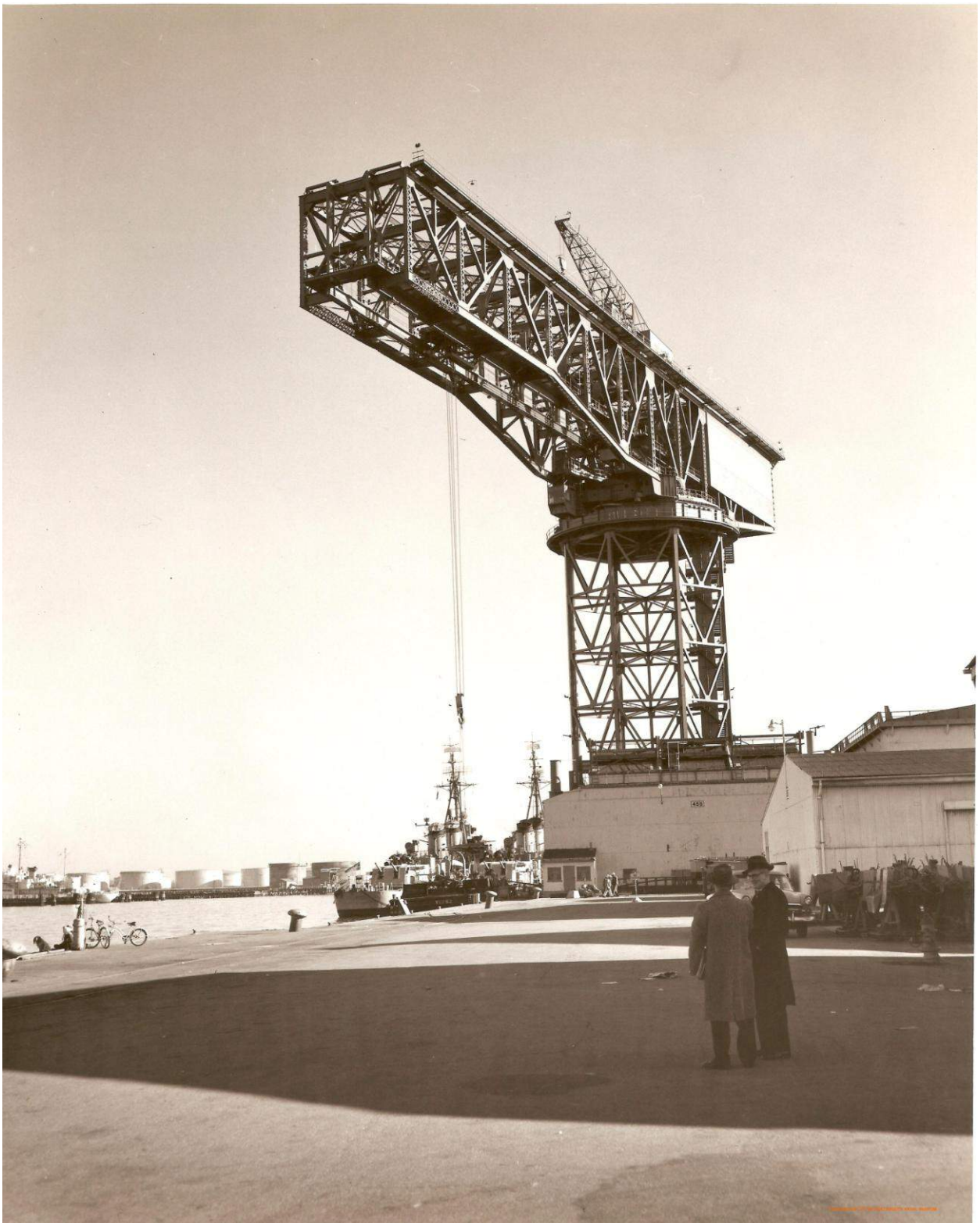

Photograph 4
Hammerhead Crane (1958).
Provided by the City of Portsmouth Naval Museum

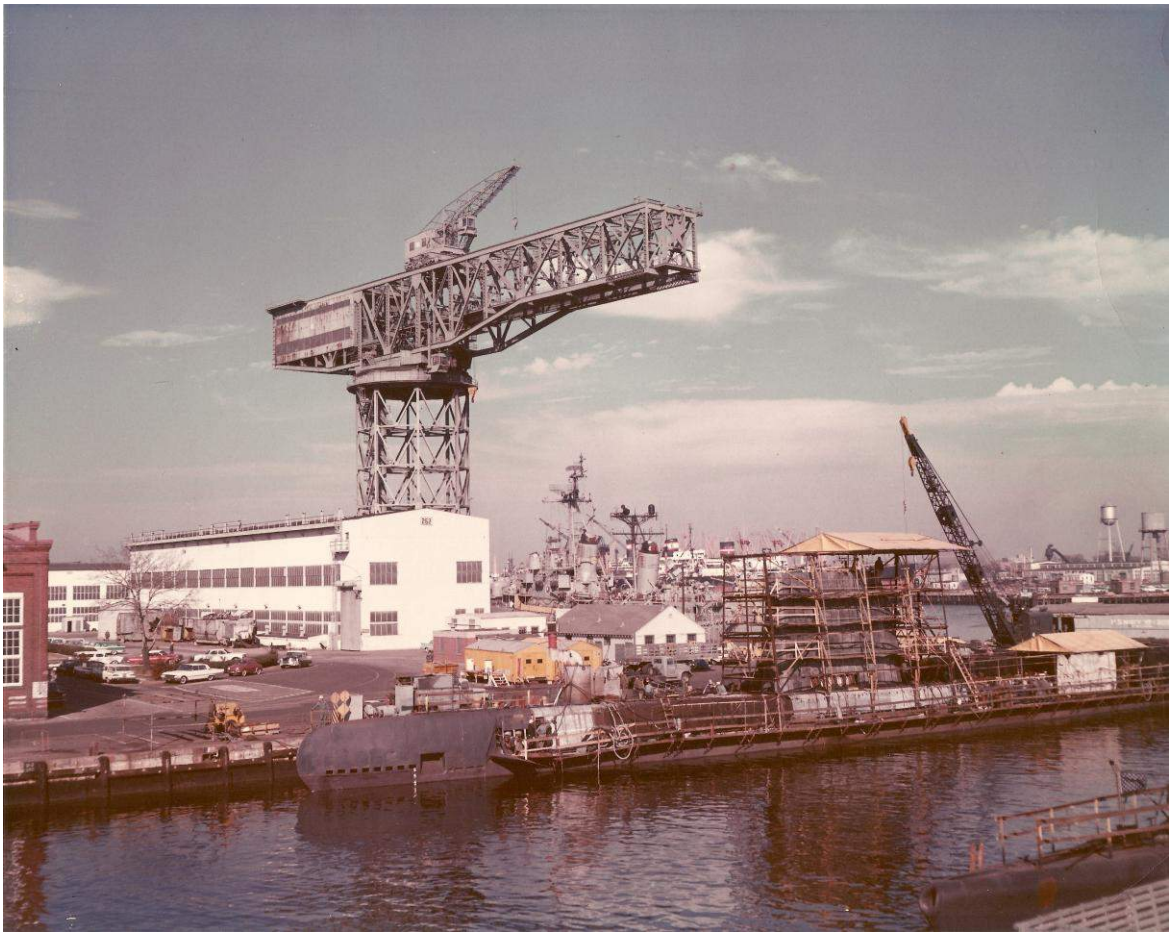

Photograph 5
Hammerhead Crane (ca. 1963).
Provided by the City of Portsmouth Naval Museum

Photograph 6
Hammerhead Crane (1970).
Provided by the City of Portsmouth Naval Museum

13-3
Physical Description
Hammerhead Crane

13-3 Physical Description - Hammerhead Crane

Innovative crane structures were constructed at the Norfolk Navy Yard during the late 19th and early 20th centuries. These cranes facilitated the construction, repair, and maintenance of ships and ship parts over time (Rachleff: 8-20).

By far, the most impressive crane structure at the Norfolk Shipyard is Facility 448, a 350 LT ton Hammerhead Crane which boasts a 115 foot radius. The towering structure is located within the general vicinity of the 18th century Gosport Shipyard which forms the historic nucleus of the naval base.

The Hammerhead Crane is constructed of steel I-beams arranged in a lattice pattern and corrugated-metal walls. The Hammerhead Crane is comprised of three cranes mounted on a single superstructure, supported by a 125-foot octagonal truss. The foundation on which it rests is composed of steel-reinforced concrete and wood piles. A metal ring sits atop the eight crane-support columns that form the crane base. The ring consists of steel rollers that enable the crane to rotate 360 degrees. The boom of the crane is composed of a 42-foot-high rectangular steel frame that straddles the crane base. One side of the boom holds lifting mechanisms and the crane operator's box, which is mounted on the boom underside. The boom also is equipped with lifting machinery and counterweights. The machinery/counterweight portion is sheathed in metal panels. A small, standard crane which situated atop the 350-ton unit is capable of traversing the entire boom on tracks. The standard crane is comprised of an operator/machinery cabin and an angled crane arm (Rachleff: 8-20).

The 310-foot metal-frame boom can rotate 360 degrees on rollers driven by gears. Three forged-steel loading hooks on the main crane are capable of lifting 112,000 to 392,000 pounds. The machinery room and operator’s cab are located under the boom. The second crane is an overhead bridge crane capable of lifting 25 tons. Located inside the machinery room, this traveling machine is mounted on a runway structure above the machinery room floor. The third crane is mounted atop the main crane and is capable of lifting 15 tons. Referred to as the “pig” because it piggybacks the main boom with a 50-foot-long boom, it was used to make repairs on the main crane, place radars on ships, and lay out rigging used to lift equipment with the hammerhead. This crane is able to travel the full length of the main boom on special tracks (Rachleff: 8-21).

Heyl & Patterson of Pittsburgh supplied the mechanical plans and selected materials. The American Bridge Company of nearby Ambridge Pennsylvania, steel fabricators and producers of custom-made engineering equipment, supplied the structural designs and steel (http://www.heylpatterson.com).

Construction began on December 19, 1938 and was completed on July 23, 1940 (Barksdale: 67). The building plans were used to design and construct nearly identical 350-ton-capacity hammerhead cranes at the Norfolk Navy Yard and New York City’s Brooklyn Navy Yard, several of the plan sheets noting “one crane for New York, one crane for Norfolk.” By returning

a comparatively low bid of $ 1.9 million, the American Bridge Company won the contract to build both the Brooklyn and Norfolk cranes (Wisner; Heyl & Paterson, Plan Sheets; American Bridge Company, Plan Sheets).

The crane was built to outfit destroyers with gun turrets and was recognized as an engineering masterpiece when it received the US Navy E for excellence (Rachleff: 8-21).

Magazine advertisements provided Heyl & Patterson with the opportunity to boast of the success of the Hammerhead Crane and other crane designs. An advertisement which appeared in *The Iron Age* (July 9, 1942) and *Blast Furnace & Steel Plant* (July 1942) included a line drawing of the Hammerhead Crane and proclaimed:

> "FOR CRANES that help build SHIPS
>
> Our plant has been presented with the Navy "E" Award for production achievement in the building of shipyard cranes.
>
> Such an award is an honor – and also a challenge.
>
> As a producer of specialized engineering equipment of this type we are especially gratified by this recognition of performance.
>
> While our cranes help the Navy build ships, other Heyl & Patterson products speed the production of steel for the ships the navy builds."
> (http://www.heylpatterson.com).

Once built the Hammerhead Crane proved to be the strongest of the day capable of carrying over 350 LT tons from their horizontal jib with an additional 15 tons of lifting capacity from the auxiliary crane mounted on top. The crane is notable for its contributing role in the construction and repair of naval vessels laying the groundwork for an Allied victory (Wisner).

Although the Hammerhead Crane at the Brooklyn Navy Yard was demolished in 1965, the Hammer Head Crane at the Norfolk Naval Shipyard remained operational until 2001 (Rachleff: 8-1).

While officially identified as a contributing resource to the Norfolk Navy Yard Historic District, the Hammerhead Crane also has the distinction of being a powerful emblem of the navy yard's World War II heritage and a well recognized and beloved symbol of the greater Norfolk-Portsmouth region. The Hammerhead Crane remains a visible anchor on the local skyline; the lighting of the five pointed star set on face of the trolley level is a welcome addition to the December holiday traditions of the regional community.

13-4
Section 106 Coordination

13-4 Section 106 Coordination

Section 106 of the National Historic Preservation Act requires federal agencies to take into account the effect of an undertaking on all resources listed in or eligible for listing in the National Register of Historic Places.

Facility 448, the Hammerhead Crane is a contributing resource to the Norfolk Navy Yard Historic District, which is eligible for listing in the National Register of Historic Places.

The Phase I Archaeological Testing of Predictive Model Norfolk Naval Shipyard, Portsmouth, Virginia (Final Report April 2011) addressed the likely presence of archaeological resources at the site of the Hammerhead Crane/Turret Assembly Area. Although no subsurface testing was performed due to the presence of the concrete parking lot and the heavily utilized industrial nature of the location, the site is considered to have a high site potential for historic archaeological sites associated with the presence of the no longer extent Ship House which was completed about 1821, damaged by fire during the Civil War and demolished in the early 20th century.

13-4-1 Mothball Alternative

In compliance with the National Environmental Policy Act (NEPA) and the National Historic Preservation Act (NHPA) the Navy will consult with appropriate parties including the Virginia Department of Historic Resources (VDHR, the State Historic Preservation Office of Virginia) to assess the effect of the Mothball Alternative on the historic, structural and engineering elements which distinguish the Hammerhead Crane individually and as a contributing resource to the Norfolk Navy Yard Historic District.

As a component of this undertaking, the Navy will identify relevant historic preservation and community organizations in order to provide the opportunity for public review and comment required as a component of the Section 106 consultation process.

If the Navy elects to pursue the Mothball Alternative as the preferred alternative, it is reasonable to expect that the Navy will advise VDHR it has determined executing this alternative will result in “no adverse effect” to historic resources.

The Mothball Alternative for the Hammerhead Crane would have no effect on resources that are potentially located below ground since there would be no ground disturbance associated with the undertaking. The Navy will address its NEPA compliance obligation IAW applicable law and regulations. At this time it is not clear whether NEPA compliance will be achieved through the invocation of a categorical exclusion (CATEX), the preparation of an Environmental Assessment (EA), or the preparation of an Environmental Impact Statement (EIS); however, one of those alternatives will eventually be selected by the Navy.

13-4-2 Demolition Alternative

In compliance with the NEPA and the NHPA, the Navy will consult with appropriate parties including the VDHR to assess the effect of demolition on the Hammerhead Crane as an individual entity and on the Norfolk Navy Yard Historic District, of which it is a contributing resource.

As a component of this undertaking, the Navy will identify relevant historic preservation and community organizations in order to provide a reasonable opportunity for public review and comment, consistent with regulatory requirements of the Section 106 consultation process.

If the Navy elects to pursue the Demolition Alternative as the preferred alternative, it is reasonable to expect that the Navy will advise VDHR it has determined executing this alternative will result in an "adverse effect." The VDHR will further evaluate the proposed undertaking, and if it elects to concur with a finding of "adverse effect," the preparation of a Memorandum of Agreement (MOA) would be the next logical step, seeking to reach agreement as to what mitigation measures are reasonable to help off-set the adverse effect.

Consistent with the Navy's instruction implementing NEPA, a determination of "adverse effect," would most likely lead to the preparation of an EA. Consistent with legal requirements of NEPA, the preparation of an EA has two potential outcomes: 1) a Finding of No Significant Impact (FONSI), or 2) the issuance of a Notice of Intent (NOI) to prepare an EIS, ultimately concluding with the issuance of a Record of Decision (ROD). Naturally, a decision to conclude an EA with a FONSI rather than a NOI to prepare an EIS will necessarily be informed by facts developed through the Navy's participation in the Section 106 consultation process. Therefore, the Navy's NHPA and NEPA compliance efforts will work in cooperation with each other to assist in reaching an informed decision with respect to all alternatives under consideration for the Hammerhead Crane.

Prior to demolition, ongoing coordination with NNSY Department of Public Works will ensure completion of any mitigation measures agreed upon in a MOA as part of the NHPA's Section 106 process. Further, whether the Navy ultimately meets its NEPA obligations with a FONSI or a ROD, those mitigation measures associated with a MOA would also be identified in the final NEPA decision document.

Should the Demolition Alternative be implemented, the structure will be removed down to ground level. Since no ground disturbance is anticipated, there would be no impact to previously undisturbed archaeological resources that may reside beneath the surface.

13-5
Bibliography

13-5 Bibliography

Publications:

Barksdale, Arthur Sydnor, Jr., Lt. Commander, USNR. *History of the Norfolk Navy Yard in World War II*
Unpublished Document from the Collection of the Portsmouth Naval Shipyard Museum

Clippings File, City of Portsmouth Naval Shipyard Museum Library, "Great Arsenal of Democracy Special"

Kauffman, James Laurence. U. S. N., *Philadelphia's Naval Yards (1801-1948)*
(New York: The Newcomen Society of England, American Branch, 1948)

Kniskern, Leslie A, Captain, U.S.N., *History of the Philadelphia Naval Shipyard* from the collection of the
National Archives, Mid Atlantic Region, Philadelphia

Rachleef, Allison and Cartayrade, Laurent, *National Register of Historic Places Registration Form: Norfolk Naval Shipyard Historic District* Unpublished Document, 2004)

Drawings:

American Bridge Company, Ambridge Plant, Erection Diagram.
Navy Department, Bureau of Yards and Docks, Hammerhead Cranes,
Brooklyn Navy Yard, Norfolk Navy Yard 1939

Heyl & Paterson Inc. Contacting Engineers,
US Navy, One Crane for New York, One Crane for Norfolk, 1939

Websites:

Franklin Delano Roosevelt, State of the Union – 3 January, 1938
http://www.let.rug.nl/usa/presidents/franklin-delano-roosevelt/state-of-the-union-1938.php)
Accessed December 19, 2012

Building the Navy's Bases in World War II
History of the Bureau of Yards and Docks and the Civil Engineer Corps, 1940-1946 Volume I, Part II: The Continental Bases (Washington, D. C.: United States Government Printing Office, 1947)
http://www.ibiblio.org/hyperwar/USN/Building_Bases/bases-8.html
Accessed November 8, 2012

Heyl & Patterson Remembers its Role in World War II
http://info.heylpatterson.com/blog/bid/104549/Heyl-Patterson-Remembers-its-Role-in-World-War-II
Accessed November 8, 2012

Wisner, Meredith, Yard Guardian: The 350-ton Hammerhead Crane
BLDG 92: Brooklyn Navy Yard Center
http://bldg92.org/blog/yard-guardian-the-350-ton-hammerhead-crane/
Accessed December 19, 2012

ATTACHMENT 14
Limited Hazardous Materials Report

ATTACHMENT

Table of Contents

Attachment 14 – Limited Hazardous Materials Report

- 14-1 – Executive Summary
- 14-2 – Background
- 14-3 – ACM Sampling and Analytical Protocol
  - 14-3-1 – Survey Procedures – General
  - 14-3-2 – Sampling Protocol
    - 14-3-2-1 – Sample Locations
    - 14-3-2-2 – Sampling Methods
  - 14-3-3 – Analytical Protocol
- 14-4 – ACM Findings
  - 14-4-1 – Surfacing Material
  - 14-4-2 – Thermal System Insulation
  - 14-4-3 – Miscellaneous Materials
  - 14-4-4 – Inaccessible Suspect ACM
- 14-5 – Lead-Containing Paint Survey
  - 14-5-1 – Lead-Containing Paint Survey Methodology
- 14-6 – Limited Universal Waste Survey
  - 14-6-1 – Universal Waste Survey Methodology
- 14-7 – Findings and Conclusions
  - 14-7-1 – Asbestos Containing Materials Findings
    - 14-7-1-1 – Asbestos Containing Materials Recommendations
  - 14-7-2 – Lead Containing Paint Findings
  - 14-7-3 – Universal Waste Survey Findings
- 14-8 – Assumptions and Limitations
- 14-9 – Bulk Material Sampling Analytical Results
- 14-10 – Sample Location Plan
- 14-11 – Inpsection Summary Tables
  - Table 14-11-1 – Summary of Limited Asbestos Analytical Results
  - Table 14-11-2 – Summary of Positive Asbestos Bulk Sample Results
  - Table 14-11-3 – Summary of Limited Lead-Containing Paint Analytical Results
  - Table 14-11-4 – Summary of Positive Lead-Containing Paint Sample Results
  - Table 14-11-5 – Summary of Suspect Universal Waste with Locations
- 14-12 – Photograph Log
- 14-13 – Homogenous Area Forms

14-1
Executive Summary

14-1 EXECUTIVE SUMMARY

On November 5th and 6th 2012, STV Incorporated (STV) conducted a limited hazardous materials survey including asbestos-containing materials and lead-containing paint at Hammerhead Crane, located at the Norfolk Naval Shipyard, Portsmouth, VA 23709, hereinafter referred to as the Site. The purpose of the survey was to identify, locate, sample, and assess the condition of accessible materials that were suspected of containing asbestos and lead and may be impacted by the proposed project.

The analytical results of the samples collected during the limited asbestos survey of the Hammerhead Crane indicate that the following materials were confirmed or assumed to contain asbestos greater than one percent (>1%) in content:

- Asphaltic Pitch Pocket Material
- Brake Pad Material
- Gray Window Caulk
- Electrical Wire Insulation (Assumed)
- Electrical Panels (Assumed)
- Roofing Materials (Assumed)
- Exterior Window Caulk (Assumed)

Asbestos containing materials (ACM) must be properly removed by a licensed contractor prior to construction activities in accordance with the Virginia Department of Labor and Industry and all other federal, state and local regulations. Contractors and employees working in this facility should be made aware of the possibility that concealed ACM may be found during demolition. They should be advised not to disturb known or suspect ACM without owner approval. Any concealed materials discovered during demolition activities, which are suspected to contain asbestos, should be sampled and analyzed to confirm the presence or absence of asbestos prior to disturbing.

All work that affects lead-containing paint should be performed in strict accordance with the United Facilities Guide Specifications (UFGS) specifications section 02 83 13.00 20, Lead in Construction, Occupational Safety and Health Administration (OSHA) Lead in Construction Standard 29 CFR 1926.62, federal, state and local laws.

STV identified potential universal waste throughout the tower, boom and machinery houses of the Hammerhead Crane in the form of light ballasts and fluorescent light tubes. A summary of site components that may contain universal waste, including their location, is included in Table 14.11.5 **(Attachment 14.11)**.

Universal waste including mercury and PCBs have been identified in light fixtures and transformers at the Site. The light fixtures and transformers should be removed and disposed in accordance with the United Facilities Guide Specifications (UFGS) Specification Section 02 84 16, Handling of Lighting Ballasts and Lamps Containing PCBs and Mercury.

14-2
Background

14-2 BACKGROUND

On November 5th and 6th 2012, STV Incorporated (STV) conducted a limited hazardous materials survey including asbestos-containing materials (ACMs) and lead-containing paint (LCP) at Hammerhead Crane, located at the Norfolk Naval Shipyard, Portsmouth, VA 23709, hereinafter referred to as the Site. The purpose of the survey was to identify, locate, sample, and assess the condition of accessible materials that were suspected of containing asbestos and may be impacted by the proposed project. The survey was performed by STV representatives Mr. Douglas Glorie (Certified Virginia asbestos inspector 3303 003769 and USEPA Lead Risk Assessor Certification Number NY-R-3398-3), Mr. Juan Zapata Jr. (USEPA Asbestos Inspector Certificate Number 11-22197).

14-3
ACM Sampling and Analytical Protocol

14-3 ACM SAMPLING AND ANALYTICAL PROTOCOL

14-3-1 Survey Procedures - General

The Site was inspected for the presence of suspect asbestos containing materials that may contain more than one percent asbestos. The purpose of this inspection was to confirm the location and quantity of asbestos containing materials (ACMs) that may be impacted by the proposed project. The inspection included the interior and exterior of the facility and was conducted without destructive sampling procedures. ACMs are divided into three main categories: Surfacing Materials, Thermal System Insulation, and Miscellaneous Materials. All of the suspect materials identified were described and categorized into homogeneous areas (HAs). An HA consists of all identified material found in various locations in a facility that are identical in color, appearance, pattern, texture, and date of installation. The HA can be described only within a single facility (i.e., red floor tile in different facility on the same campus, even if installed on the same day, comprise different HAs).

The asbestos survey was conducted in accordance with the Asbestos Hazard Emergency Response Act (AHERA) guidelines (USEPA Regulation 40 CFR Part 763). The number of samples collected was dependent upon the homogeneous area category and the quantity of material present, using a minimum number of samples, which met the sampling criteria found in 29 CFR 1926.1101 as follows:

AHERA GUIDELINES FOR DETERMINING THE NUMBER OF SAMPLES TO COLLECT		
HA CATEGORY	HA SIZE	SAMPLES REQUIRED
Surfacing Materials	<1,000 SF	3
“ “	1,000-5,000 SF	5
“ “	>5,000 SF	7 or more
Thermal System Insulation	< 6 SF or LF of patched	1
“ “	< 6 SF or LF of non-patched	Per AHERA, these materials must be sampled "in a manner sufficient to determine whether or not they contain asbestos", typically 3 samples based upon inspector judgment.
“ “	> 6 SF or LF	Per AHERA, these materials must be sampled "in a manner sufficient to determine whether or not they contain asbestos", typically 3 samples based upon inspector judgment.
Miscellaneous Materials	No Stipulation	Per AHERA, these materials must be sampled "in a manner sufficient to determine whether or not they contain asbestos".

SF = Square feet
LF = Linear feet

14-3-2 Sampling Protocol

14-3-2-1 Sample Locations

Samples of suspect miscellaneous materials were collected in a randomly distributed manner sufficient to determine whether the materials were asbestos containing. No samples were collected from any HA where the inspector determined that the material was non-ACM (such as thermal system insulation that was obviously fibrous glass, foam glass, or rubber).

14-3-2-2 Sampling Methods

Samples were obtained with tools designed to penetrate a material without creating excessive dust. A utility knife, chisel, and hammer were utilized, rather than scratching a sample from the surface of suspected materials, in an effort to obtain a sample that was representative of all layers of the material. The area was pre-wetted to reduce fiber generation during the sampling process. Where practical, a small, broken piece of the material was found and used as a sample.

STV sampling procedures incorporated the use of plastic zip-lock bags labeled in a unique numbering sequence to store the bulk samples. Information about bulk samples, including the sample number and material description, were noted on the chain-of-custody sheets as each sample was collected. Analytical results and laboratory chain-of-custody sheets are included in **Attachment 14.9**. A Sample Location Plan is presented in **Attachment 14.10**.

14-3-3 Analytical Protocol

Bulk samples of suspect ACM were collected at the Site and laboratory analysis for asbestos was conducted by AmeriSci Richmond, 13635 Genito Road, Midlothian, VA 23112 utilizing Polarized Light Microscopy (PLM) and Transmission Electron Microscopy (TEM); Lead analysis was performed by Schneider Laboratories, Inc. (see section 5.1). AmeriSci is accredited for PLM analysis by both the American Industrial Hygiene Association (AIHA) and the National Voluntary Laboratory Accreditation Program (NVLAP). (NVLAP Laboratory Code 101904-0 & AIHA Laboratory ID: 100527).

Bulk samples of suspect ACM were analyzed using PLM coupled with dispersion staining, as described in USEPA Regulation 40 CFR Part 763 and the National Emissions Standard for Hazardous Air Pollutants (NESHAP). NESHAP is the standard industry protocol for the determination of asbestos in materials. A suspect material is immersed in a solution of known refractive index and subjected to illumination by polarized light. The color displays that result are compared to a standardized atlas whereby the specific variety of asbestos is determined. It should also be recognized that PLM is primarily a qualitative identification method whereby asbestos percentage, if any, is estimated. While United States Environmental Protection Agency (USEPA) regulations governing ACM consider materials containing greater than 1 percent as asbestos, accurately quantifying asbestos content below 5-percent has been shown to be unreliable.

14-4
ACM Findings

14-4 ACM FINDINGS

The analytical results of the samples collected during the limited asbestos surveys conducted on November 5th and 6th, 2012, of the Hammerhead Crane indicate that the following materials were confirmed or assumed to contain asbestos greater than one percent (>1%) in content:

- Asphaltic Pitch Pocket Material
- Brake Pad Material
- Gray Window Caulk
- Electrical Wire Insulation (Assumed)
- Electrical Panels (Assumed)
- Roofing Materials (Assumed)
- Exterior Window Caulk (Assumed)

According to the Occupational Safety and Health Administration (OSHA) and USEPA regulations, any material that contains more than one percent of any type of asbestos is considered an ACM. The following narrative lists the types of suspect materials sampled during the survey. Each section lists HA numbers and sample numbers. Similar materials with unique patterns or colors (e.g., ceiling tiles, floor tiles) have been assigned unique HAs. Results of the limited asbestos inspection and sample analysis are presented in **Attachment 14.11 (Tables 14.11.1 & 14.11.2)**.

14-4-1 Surfacing Material

Surfacing materials are defined by 29 CFR 1910.1101 as "sprayed, troweled-on or otherwise applied to surfaces (such as plaster on ceilings and walls or other materials on surfaces for acoustical, fireproofing and other purposes)". The suspect surfacing material that was observed, but found to not be confirmed ACM, in the areas impacted by the proposed scope of work include:

- White fibrous material (beneath wire rope drum, troweled unto surface of drum floor)

14-4-2 Thermal System Insulation

Thermal system insulation is defined as insulation material applied to pipes, fittings, boilers, breeching, tanks, ducts or other structural components to prevent heat loss or gain. Suspect thermal system insulation that was sampled by the proposed scope of work include:

- Insulation Paper Backing

14-4-3 Miscellaneous Materials

Miscellaneous materials are defined by 40 CFR 763.83 as materials on "structural components, structural members or fixtures, such as floor and ceiling tiles, and does not include surfacing or thermal system insulation." Suspect miscellaneous materials impacted by the proposed scope of work included the following:

- Black Joint Filler
- Mastic on Steam Pipe Joints
- Caulk Around Windows
- Brown Fibrous Material Between Concrete Bulkhead
- Black Mastic on Vertical Pipe Boot
- Black Tar on Concrete
- Tar on Roof of Main Crane
- Maintenance Crane Window Glazing
- Caulk on Plexiglas Windows
- Caulk on Slew Ring

14-4-4 Inaccessible Suspect ACM

During the survey, samples were collected if they were readily accessible and could be collected using non-destructive methods. The following portions of the facility were not accessible:

- Electrical Wire Insulation (Assumed)
- Electrical Panels (Assumed)
- Roofing Materials (Assumed)
- Exterior Window Caulk (Assumed)

Additional ACMs may be present in inaccessible or concealed spaces. These spaces include, but are not limited to, spaces between wall/ceiling cavities, interior or mechanical components such as interior ducts, etc. If future demolition or significant modification activities to the facility make these areas accessible, STV recommends that a thorough assessment of these spaces be conducted at that time to identify and confirm the presence of additional ACMs.

14-5
Lead-Containing Paint Survey

14-5 LEAD-CONTAINING PAINT SURVEY

A Lead-Containing Paint (LCP) survey was performed of painted components of the Hammerhead Crane. The purpose of this survey was to identify, locate, sample, and assess the condition of accessible representative suspect LCP for compliance with the OSHA Lead in Construction standard. Mr. Juan Zapata Jr. performed the LCP survey under the direct supervision of Douglas Glorie, a USEPA Certified Lead Risk Assessor.

14-5-1 Lead-Containing Paint Survey Methodology

The USEPA and U.S. Department of Housing and Urban Development (HUD) have established a definition of lead-containing paint as paint or other surface coatings that contain lead equal to or greater than 1.0 mg/cm^2 or 0.5% by weight (equivalent units are: 5,000 µg/g, 5,000 mg/kg, or 5,000 ppm by weight). Surface coatings include paint, shellac, varnish, or any other coating, including wallpaper which covers painted surfaces. The survey consisted of a visual survey of the facility which would be impacted by the proposed scope of work and collection of representative paint chip samples.

Lead analysis was performed by Schneider Laboratories Inc. Schneider is accredited by AIHA (Laboratory ID: 100527) to perform environmental lead testing.

Please be advised that, according to the OSHA 29 CFR 1926.62 Lead in Construction Standard, the presence of lead in any amount (LCP) triggers requirements of the OSHA Lead in Construction standard.

14-6
Limited Universal Waste Survey

14-6 LIMITED UNIVERSAL WASTE SURVEY

14-6-1 Universal Waste Survey Methodology

STV conducted a limited visual inspection of the site's equipment and devices to determine which systems may likely contain universal waste, such as mercury. Any control used for measurement of vacuum, pressure, fluid level, temperature, or flow rate could contain mercury. The inspection consisted of looking at lighting (fluorescent lights, light ballasts and switches) and electrical systems (load meters, supply relays, and transformers and generators).

STV conducted a limited PCB caulk inspection by performing a visual and documented assessment of representative window caulking. All existing caulk is assumed to contain detectable levels of PCBs and should be managed in accordance with the Toxic Substances Control Act (TSCA), USEPA, state and local regulations.

14-7
Findings and Conclusions

14-7 FINDINGS AND CONCLUSIONS

14-7-1 Asbestos Containing Materials Findings

The analytical results of the samples collected during the limited asbestos survey of the Hammerhead Crane, located at the Norfolk Naval Shipyard, indicate that the following materials were confirmed or assumed to contain asbestos greater than one percent (>1%) in content:

- Asphaltic Pitch Pocket Material
- Brake Pad Material
- Gray Window Caulk
- Electrical Wire Insulation (Assumed)
- Electrical Panels (Assumed)
- Roofing Materials (Assumed)
- Exterior Window Caulk (Assumed)

A summary of limited asbestos inspection results are included in Table 14.3.1 (in **Attachment 14.11**). A summary of positive asbestos identified during the survey, including locations and quantities, is included in Table 14.3.2 (in **Attachment 14.11**).

14-7-1-1 Asbestos Containing Materials Recommendations

A Virginia Permit Application and Virginia Asbestos Abatement and a Demolition / Renovation Notification Form must be submitted prior to abatement activities. Asbestos containing materials must be properly removed by a licensed contractor prior to construction activities in accordance with the United Facilities Guide Specifications (UFGS) Section 02 82 16.00 20 Engineering Controls of Asbestos Containing materials, Virginia Asbestos Control Regulation and all other federal, state and local regulations. Contractors and employees working in this facility should be made aware of the possibility that concealed ACM may be found during demolition. They should be advised not to disturb known or suspect ACM without owner approval. Any concealed materials discovered during demolition activities, which are suspected to contain asbestos, should be sampled and analyzed to confirm the presence of asbestos prior to disturbing.

14-7-2 Lead Containing Paint Findings

A limited LCP survey was performed. All work that affects lead-containing paint should be performed in strict accordance with the United Facilities Guide Specifications (UFGS) specifications section 02 83 13, Occupational Safety and Health Administration (OSHA) Lead in Construction Standard 29 CFR 1926.62, federal, state and local laws.

14-7-3 Universal Waste Survey Findings

STV identified potential universal waste in the form of light ballasts and fluorescent light tubes. A summary of site components that may contain universal waste, including their location, is included in Table 14.3.5 **(Attachment 14.11)**.

The light fixtures are considered to contain mercury and are therefore classified as universal waste. The light fixtures should be removed and disposed in accordance with UFGS Specification Section 02 84 16, Handling of Lighting Ballasts and Lamps Containing PCBs and Mercury.

14-8
Assumptions and Limitations

14-8 ASSUMPTIONS AND LIMITATIONS

The results, findings, conclusions, and recommendations expressed in the report are based only on conditions that were noted on November 5th and 6th, 2012 during STV's limited survey of the Hammerhead Crane, located at the Norfolk Naval Shipyard, Portsmouth, VA.

Any conditions or materials that could not be visually identified on the surface were not inspected and may differ from those conditions or materials noted. It was not within the scope of the survey to remove surface materials to investigate portions of the structure or materials that lay beneath the surface. STV selection of sample locations and frequency of sampling was based on STV observations and the assumption that like materials in the same area are homogeneous in content.

The report is designed to aid the facility owner, architect, construction manager, general contractors, and potential asbestos abatement contractors in locating ACM, LCP and universal waste. Under no circumstances is the report to be utilized as a bidding document or as a project specification document.

The scope of services performed in execution of this evaluation may not be appropriate to satisfy the needs of other users, and use or re-use of this document or the findings, conclusions, or recommendations is at the risk of said user. Although every attempt has been made to identify suspect asbestos-containing materials, lead-containing paint and universal waste items throughout the facility, the non-destructive inspection technique used is inherently limited in the sense that only full demolition procedures will reveal all materials containing within the Hammerhead Crane facility and its inter-dependent components and devices. Additionally, the passage of time may result in a change in the environmental characteristics at this Site. The report does not warrant against future operations or conditions that could affect the recommendations made. The results, findings, conclusions and recommendations expressed in this report are based only on conditions that were observed during STV's inspection of the Site.

14-9
Bulk Material Sampling
Analytical Results

Please Reply To:

AmeriSci Richmond
13635 GENITO ROAD
MIDLOTHIAN, VIRGINIA 23112
TEL: (804) 783-1200 • FAX: (804) 763-1800

FACSIMILE TELECOPY TRANSMISSION

To: Doug Glorie
STV Incorporated
Fax #:
Email: douglas.glorie@stvinc.com

From: William M. Dunstan
AmeriSci Job #: 112111623
Subject: PLM 5 day Results
Client Project: 3015783; NNSY; Hammerhead Crane, Norfolk, VA

Date: Monday, November 19, 2012
Time: 13:11:35
Comments:

Number of Pages: 13 (including cover sheet)

CONFIDENTIALITY NOTICE: Unless otherwise indicated, the information contained in this communication is confidential information intended for use of the individual named above. If the reader of this communication is not the intended recipient, you are hereby notified that any dissemination, distribution or copying of this communication is prohibited. If you have received this communication in error, please immediately notify the sender by telephone and return the original message to the above address via the US Postal Service at our expense. Preliminary data reported here will be verified before final report is issued. Samples are disposed of in 60 days or unless otherwise instructed by the protocol or special instructions in writing. Thank you.

Certified Analysis *Service 24 Hours A Day • 7 Days A Week* *Competitive Prices*
visit our web site - www.amerisci.com

AmeriSci Richmond
13635 GENITO ROAD
MIDLOTHIAN, VIRGINIA 23112
TEL: (804) 763-1200 • FAX: (804) 763-1800

PLM Bulk Asbestos Report

STV Incorporated
Attn: Doug Glorie
225 Park Avenue South

New York, NY 10003

Date Received 11/14/12 **AmeriSci Job #** 112111623
Date Examined 11/19/12 **P.O. #**
Page 1 **of** 8
RE: 3015783; NNSY; Hemmerhead Crane, Norfolk, VA

Client No. / HGA	Lab No.	Asbestos Present	Total % Asbestos
1-1 1	112111623-01 **Location:** Black Joint Filler; Concrete Joints To Base Of Crane (Tower)	*No*	NAD (by CVES) by William M. Dunstan on 11/19/12
Analyst Description: Black, Heterogeneous, Non-Fibrous, Bulk Material **Asbestos Types:** **Other Material:** Non-fibrous 100 %			
1-2 1	112111623-02 **Location:** Black Joint Filler; Concrete Joints To Base Of Crane (Tower)	*No*	NAD (by CVES) by William M. Dunstan on 11/19/12
Analyst Description: Black, Heterogeneous, Non-Fibrous, Bulk Material **Asbestos Types:** **Other Material:** Non-fibrous 100 %			
1-3 1	112111623-03 **Location:** Black Joint Filler; Concrete Joints To Base Of Crane (Tower)	*No*	NAD (by CVES) by William M. Dunstan on 11/19/12
Analyst Description: Black, Heterogeneous, Non-Fibrous, Bulk Material **Asbestos Types:** **Other Material:** Non-fibrous 100 %			
2-1 2	112111623-04 **Location:** Mastic On Stream Pipe Joints; Pipe Joints	*No*	NAD (by CVES) by William M. Dunstan on 11/19/12
Analyst Description: White, Heterogeneous, Non-Fibrous, Bulk Material **Asbestos Types:** **Other Material:** Synthetic fibers 2 %, Non-fibrous 98 %			
2-2 2	112111623-05 **Location:** Mastic On Stream Pipe Joints; Pipe Joints	*No*	NAD (by CVES) by William M. Dunstan on 11/19/12
Analyst Description: Gray, Heterogeneous, Non-Fibrous, Bulk Material **Asbestos Types:** **Other Material:** Wollastonite 3 %, Non-fibrous 97 %			

See Reporting notes on last page

PLM Bulk Asbestos Report

3015783; NNSY; Hammerhead Crane, Norfolk, VA

Client No. / HGA	Lab No.	Asbestos Present	Total % Asbestos
2-3 2	112111623-06 **Location:** Mastic On Stream Pipe Joints; Pipe Joints **Analyst Description:** Gray, Heterogeneous, Non-Fibrous, Bulk Material **Asbestos Types:** **Other Material:** Wollastonite 3 %, Non-fibrous 97 %	***No***	NAD (by CVES) by William M. Dunstan on 11/19/12
3-1 3	112111623-07 **Location:** Caulk Around Windows; Elevator "Window" Corrugated Gated Openings **Analyst Description:** Gray, Heterogeneous, Non-Fibrous, Bulk Material **Asbestos Types:** **Other Material:** Non-fibrous 100 %	***No***	NAD (by CVES) by William M. Dunstan on 11/19/12
3-2 3	112111623-08 **Location:** Caulk Around Windows; Elevator "Window" Corrugated Gated Openings **Analyst Description:** Gray, Heterogeneous, Non-Fibrous, Bulk Material **Asbestos Types:** **Other Material:** Non-fibrous 100 %	***No***	NAD (by CVES) by William M. Dunstan on 11/19/12
3-3 3	112111623-09 **Location:** Caulk Around Windows; Elevator "Window" Corrugated Gated Openings **Analyst Description:** Gray, Heterogeneous, Non-Fibrous, Bulk Material **Asbestos Types:** **Other Material:** Non-fibrous 100 %	***No***	NAD (by CVES) by William M. Dunstan on 11/19/12
4-1 4	112111623-10 **Location:** Brown Fibrous Material Between Concrete Bulkhead; Concrete Bulkhead: 350/375/400 **Analyst Description:** Black, Heterogeneous, Fibrous, Bulk Material **Asbestos Types:** **Other Material:** Cellulose 75 %, Non-fibrous 25 %	***No***	NAD (by CVES) by William M. Dunstan on 11/19/12
4-2 4	112111623-11 **Location:** Brown Fibrous Material Between Concrete Bulkhead; Concrete Bulkhead: 350/375/400 **Analyst Description:** Black, Heterogeneous, Fibrous, Bulk Material **Asbestos Types:** **Other Material:** Cellulose 75 %, Non-fibrous 25 %	***No***	NAD (by CVES) by William M. Dunstan on 11/19/12

See Reporting notes on last page

PLM Bulk Asbestos Report

3015783; NNSY; Hammerhead Crane, Norfolk, VA

Client No. / HGA	Lab No.	Asbestos Present	Total % Asbestos
4-3 4	112111623-12 **Location:** Brown Fibrous Material Between Concrete Bulkhead; Concrete Bulkhead: 350/375/400	*No*	NAD (by CVES) by William M. Dunstan on 11/19/12
Analyst Description: Black, Heterogeneous, Fibrous, Bulk Material **Asbestos Types:** **Other Material:** Cellulose 75 %, Non-fibrous 25 %			
5-1 5	112111623-13 **Location:** Black Mastic On Vertical Pipe Boot; Ground Level At Tower Stairs	*No*	NAD (by CVES) by William M. Dunstan on 11/19/12
Analyst Description: Black, Heterogeneous, Non-Fibrous, Bulk Material **Asbestos Types:** **Other Material:** Cellulose 10 %, Non-fibrous 90 %			
5-2 5	112111623-14 **Location:** Black Mastic On Vertical Pipe Boot; Ground Level At Tower Stairs	*No*	NAD (by CVES) by William M. Dunstan on 11/19/12
Analyst Description: Black, Heterogeneous, Non-Fibrous, Bulk Material **Asbestos Types:** **Other Material:** Cellulose 10 %, Non-fibrous 90 %			
5-3 5	112111623-15 **Location:** Black Mastic On Vertical Pipe Boot; Ground Level At Tower Stairs	*No*	NAD (by CVES) by William M. Dunstan on 11/19/12
Analyst Description: Black, Heterogeneous, Non-Fibrous, Bulk Material **Asbestos Types:** **Other Material:** Cellulose 10 %, Non-fibrous 90 %			
6-1 6	112111623-16 **Location:** Black Tar On Concrete; Ground Level Floor	*No*	NAD (by CVES) by William M. Dunstan on 11/19/12
Analyst Description: Black, Heterogeneous, Non-Fibrous, Bulk Material **Asbestos Types:** **Other Material:** Non-fibrous 100 %			
6-2 6	112111623-17 **Location:** Black Tar On Concrete; Ground Level Floor	*No*	NAD (by CVES) by William M. Dunstan on 11/19/12
Analyst Description: Black, Heterogeneous, Non-Fibrous, Bulk Material **Asbestos Types:** **Other Material:** Non-fibrous 100 %			

See Reporting notes on last page

PLM Bulk Asbestos Report

3015783; NNSY; Hammerhead Crane, Norfolk, VA

Client No. / HGA	Lab No.	Asbestos Present	Total % Asbestos
6-3 6	112111623-18 **Location:** Black Tar On Concrete; Ground Level Floor	*No*	NAD (by CVES) by William M. Dunstan on 11/19/12
Analyst Description: Black, Heterogeneous, Non-Fibrous, Bulk Material **Asbestos Types:** **Other Material:** Non-fibrous 100 %			
7-1 7	112111623-19 **Location:** Tar On Roof Of Main Crane; Main Crane	*No*	NAD (by CVES) by William M. Dunstan on 11/19/12
Analyst Description: Black, Heterogeneous, Non-Fibrous, Bulk Material **Asbestos Types:** **Other Material:** Non-fibrous 100 %			
7-2 7	112111623-20 **Location:** Tar On Roof Of Main Crane; Main Crane	*No*	NAD (by CVES) by William M. Dunstan on 11/19/12
Analyst Description: Black, Heterogeneous, Non-Fibrous, Bulk Material **Asbestos Types:** **Other Material:** Non-fibrous 100 %			
7-3 7	112111623-21 **Location:** Tar On Roof Of Main Crane; Main Crane	*No*	NAD (by CVES) by William M. Dunstan on 11/19/12
Analyst Description: Black, Heterogeneous, Non-Fibrous, Bulk Material **Asbestos Types:** **Other Material:** Non-fibrous 100 %			
8-1 8	112111623-22 **Location:** Maintenance Crane Window Glazing; Maintenance Crane (Upper Crane)	*No*	NAD (by CVES) by William M. Dunstan on 11/19/12
Analyst Description: Gray, Heterogeneous, Non-Fibrous, Bulk Material **Asbestos Types:** **Other Material:** Non-fibrous 100 %			
8-2 8	112111623-23 **Location:** Maintenance Crane Window Glazing; Maintenance Crane (Upper Crane)	*No*	NAD (by CVES) by William M. Dunstan on 11/19/12
Analyst Description: Gray, Heterogeneous, Non-Fibrous, Bulk Material **Asbestos Types:** **Other Material:** Non-fibrous 100 %			

PLM Bulk Asbestos Report

3015783; NNSY; Hammerhead Crane, Norfolk, VA

Client No. / HGA	Lab No.	Asbestos Present	Total % Asbestos
8-3 8	112111623-24 **Location:** Maintenance Crane Window Glazing; Maintenance Crane (Upper Crane)	***No***	NAD (by CVES) by William M. Dunstan on 11/19/12
Analyst Description: Gray, Heterogeneous, Non-Fibrous, Bulk Material **Asbestos Types:** **Other Material:** Non-fibrous 100 %			
9-1 9	112111623-25 **Location:** Caulk On Plexiglass Windows; Entry Door To Maintenance Crane	***No***	NAD (by CVES) by William M. Dunstan on 11/19/12
Analyst Description: White, Heterogeneous, Non-Fibrous, Bulk Material **Asbestos Types:** **Other Material:** Non-fibrous 100 %			
9-2 9	112111623-26 **Location:** Caulk On Plexiglass Windows; Entry Door To Maintenance Crane	***No***	NAD (by CVES) by William M. Dunstan on 11/19/12
Analyst Description: White, Heterogeneous, Non-Fibrous, Bulk Material **Asbestos Types:** **Other Material:** Non-fibrous 100 %			
9-3 9	112111623-27 **Location:** Caulk On Plexiglass Windows; Entry Door To Maintenance Crane	***No***	NAD (by CVES) by William M. Dunstan on 11/19/12
Analyst Description: White, Heterogeneous, Non-Fibrous, Bulk Material **Asbestos Types:** **Other Material:** Non-fibrous 100 %			
10-1 10	112111623-28 **Location:** Insulation Paper Backing; Electrical Power Room At Ground Level	***No***	NAD (by CVES) by William M. Dunstan on 11/19/12
Analyst Description: White, Heterogeneous, Fibrous, Bulk Material **Asbestos Types:** **Other Material:** Fibrous glass 80 %, Non-fibrous 20 %			
10-2 10	112111623-29 **Location:** Insulation Paper Backing; Electrical Power Room At Ground Level	***No***	NAD (by CVES) by William M. Dunstan on 11/19/12
Analyst Description: White, Heterogeneous, Fibrous, Bulk Material **Asbestos Types:** **Other Material:** Fibrous glass 80 %, Non-fibrous 20 %			

PLM Bulk Asbestos Report

3015783; NNSY; Hammerhead Crane, Norfolk, VA

Client No. / HGA	Lab No.	Asbestos Present	Total % Asbestos
10-3 10	112111623-30 **Location:** Insulation Paper Backing; Electrical Power Room At Ground Level	***No***	NAD (by CVES) by William M. Dunstan on 11/19/12
Analyst Description: White, Heterogeneous, Fibrous, Bulk Material **Asbestos Types:** **Other Material:** Fibrous glass 80 %, Non-fibrous 20 %			
11-1 11	112111623-31 **Location:** Caulk On Slew Ring; Between Ring Floor & Elevator Shaft	***No***	NAD (by CVES) by William M. Dunstan on 11/19/12
Analyst Description: White, Heterogeneous, Non-Fibrous, Bulk Material **Asbestos Types:** **Other Material:** Non-fibrous 100 %			
11-2 11	112111623-32 **Location:** Caulk On Slew Ring; Between Ring Floor & Elevator Shaft	***No***	NAD (by CVES) by William M. Dunstan on 11/19/12
Analyst Description: White, Heterogeneous, Non-Fibrous, Bulk Material **Asbestos Types:** **Other Material:** Non-fibrous 100 %			
11-3 11	112111623-33 **Location:** Caulk On Slew Ring; Between Ring Floor & Elevator Shaft	***No***	NAD (by CVES) by William M. Dunstan on 11/19/12
Analyst Description: White, Heterogeneous, Non-Fibrous, Bulk Material **Asbestos Types:** **Other Material:** Non-fibrous 100 %			
12-1 12	112111623-34 **Location:** Asphaltic Pitch Pocket Material; Pitch Pockets On Main Crane's Roof	***Yes***	8 % (by CVES) by William M. Dunstan on 11/19/12
Analyst Description: Black, Heterogeneous, Non-Fibrous, Bulk Material **Asbestos Types:** Chrysotile 8.0 % **Other Material:** Non-fibrous 92 %			
12-2 12	112111623-35 **Location:** Asphaltic Pitch Pocket Material; Pitch Pockets On Main Crane's Roof		NA/PS
Analyst Description: Bulk Material **Asbestos Types:** **Other Material:**			

See Reporting notes on last page

PLM Bulk Asbestos Report

3015783; NNSY; Hammerhead Crane, Norfolk, VA

Client No. / HGA	Lab No.	Asbestos Present	Total % Asbestos
12-3 12	112111623-36 **Location:** Asphaltic Pitch Pocket Material; Pitch Pockets On Main Crane's Roof **Analyst Description:** Bulk Material **Asbestos Types:** **Other Material:**		NA/PS
13-1 13	112111623-37 **Location:** Brake Pad Material; Wire Rope Drum Controls - Main Crane **Analyst Description:** Brown, Heterogeneous, Fibrous, Bulk Material **Asbestos Types:** Chrysotile 90.0 % **Other Material:** Non-fibrous 10 %	***Yes***	90 % (by CVES) by William M. Dunstan on 11/19/12
13-2 13	112111623-38 **Location:** Brake Pad Material; Wire Rope Drum Controls - Main Crane **Analyst Description:** Bulk Material **Asbestos Types:** **Other Material:**		NA/PS
13-3 13	112111623-39 **Location:** Brake Pad Material; Wire Rope Drum Controls - Main Crane **Analyst Description:** Bulk Material **Asbestos Types:** **Other Material:**		NA/PS
14-1	112111623-40 **Location:** White Fribrous Material; Floor Beneath Wire Rope Drum **Analyst Description:** White/Brown, Heterogeneous, Fibrous, Bulk Material **Asbestos Types:** **Other Material:** Cellulose 60 %, Fibrous glass 20 %, Non-fibrous 20 %	***No***	NAD (by CVES) by William M. Dunstan on 11/19/12
15-1 15	112111623-41 **Location:** Gray Window Caulk; Around Maintenance Crane Windows **Analyst Description:** Gray/Tan, Heterogeneous, Non-Fibrous, Bulk Material **Asbestos Types:** Chrysotile 3.0 % **Other Material:** Non-fibrous 97 %	***Yes***	3 % (by CVES) by William M. Dunstan on 11/19/12

See Reporting notes on last page

PLM Bulk Asbestos Report

3015783; NNSY; Hammerhead Crane, Norfolk, VA

Client No. / HGA	Lab No.	Asbestos Present	Total % Asbestos
15-2	112111623-42		NA/PS
15	**Location:** Gray Window Caulk; Around Maintenance Crane Windows		
Analyst Description: Bulk Material **Asbestos Types:** **Other Material:**			
15-3	112111623-43		NA/PS
15	**Location:** Gray Window Caulk; Around Maintenance Crane Windows		
Analyst Description: Bulk Material **Asbestos Types:** **Other Material:**			

Reporting Notes:

Analyzed by: William M. Dunstan William M. Dunstan Date 11/19/12

*NAD = no asbestos detected, Detection Limit <1%, Reporting Limits: CVES = 1%, 400 Pt Ct = 0.25%, 1000 Pt Ct = 0.1%; "Present" or NVA = "No Visible Asbestos" are observations made during a qualitative analysis; NA = not analyzed; NA/PS = not analyzed / positive stop; PLM Bulk Asbestos Analysis by EPA 600/M4-82-020 per 40 CFR 763 (NVLAP Lab Code 101904-0) and ELAP PLM Analysis Protocol 198.1 for New York friable samples (198.6 for NOB samples)(NYSDOH ELAP Lab # 10984); CA ELAP Lab # 2508; Note: PLM is not consistently reliable in detecting asbestos in floor coverings and similar NOB materials. NAD or Trace results by PLM are inconclusive, TEM is currently the only method that can be used to determine if this material can be considered or treated as non-asbestos-containing in New York State (also see EPA Advisory for floor tile, FR 59, 146, 38970, 8/1/94). NIST Accreditation requirements mandate that this report must not be reproduced except in full without the approval of the laboratory. This PLM report relates ONLY to the items tested.

Reviewed By:_____

STV | STV INCORPORATED

ASBESTOS SURVEY DATA SHEET/ CHAIN OF CUSTODY

PROJECT NO.: 3015783
CLIENT: NNSY
PROJECT SITE: Hammerhead Crane, Norfolk, VA
Project Manager: Douglas Glorie

LOCATION(S) SURVEYED: Hammerhead Crane
PROPOSED PROJECT: Hammerhead Crane Study
DATE(S) OF INSPECTION: 11/5/12, 11/6/12
Inspector(s): Doug Glorie, Juan Zapata Jr.

112-11-1623

STV Incorporated
225 Park Avenue South, New York, NY 10003
Phone : 212-505-4930 / Fax: 212-529-5237

RESULTS TO: D. Glorie **FAX No.:** 212-529-5237
Douglas.glorie@stvinc.com

TURNAROUND TIME: Standard (5) DAY
☐ 4 HR. ☐ 12 HR. ☐ 24 HR. ☐ 48 HI

HA	SAMPLE NO.	MATERIAL DESCRIPTION	SAMPLE LOCATION	APPROX. QUANTITY (LF/SF)	FIELD NOTES
1	1-1	Black Joint Filler	Concrete Joints to Base of Crane (Tower)		
1	1-2	Black Joint Filler	Concrete Joints to Base of Crane (Tower)		
1	1-3	Black Joint Filler	Concrete Joints to Base of Crane (Tower)		
2	2-1	Mastic on Steam Pipe Joints	Pipe Joints		
2	2-2	Mastic on Steam Pipe Joints	Pipe Joints		
2	2-3	Mastic on Steam Pipe Joints	Pipe Joints		
3	3-1	Caulk Around Windows	Elevator "Window" Corrugated Gated Openings		
3	3-2	Caulk Around Windows	Elevator "Window" Corrugated Gated Openings		
3	3-3	Caulk Around Windows	Elevator "Window" Corrugated Gated Openings		
4	4-1	Brown Fibrous Material Between Concrete Bulkhead	Concrete Bulkhead: 350/375/400		
4	4-2	Brown Fibrous Material Between Concrete Bulkhead	Concrete Bulkhead: 350/375/400		
4	4-3	Brown Fibrous Material Between Concrete Bulkhead	Concrete Bulkhead: 350/375/400		

RECEIVED
NOV 14 2012
By

CHAIN OF CUSTODY

Relinquished by: (print)	(Sign)			Relinquished by: (print)	(Sign)			Relinquished by: (print)	(Sign)		
Juan Zapata Jr.		11/12/12	5:00 AM/PM			/ /	AM/PM			/ /	AM/PM
Received by: (print)	**(Sign)**			**Received by: (print)**	**(Sign)**			**Received by: (print)**	**(Sign)**		
		/ /	AM/PM			/ /	AM/PM			/ /	AM/PM

GENERAL NOTES: All inconclusive NOBs to be analyzed by TEM. Please stop at 1st positive in any homogeneous group.

STV | STV INCORPORATED

ASBESTOS SURVEY DATA SHEET/ CHAIN OF CUSTODY

PROJECT NO.: 3015783
CLIENT: NNSY
PROJECT SITE: Hammerhead Crane, Norfolk, VA
Project Manager: Douglas Glorie

LOCATION(S) SURVEYED: Hammerhead Crane
PROPOSED PROJECT: Hammerhead Crane Study
DATE(S) OF INSPECTION: 11/5/12, 11/6/12
Inspector(s): Doug Glorie, Juan Zapata Jr.

112111623

STV Incorporated
225 Park Avenue South, New York, NY 10003
Phone : 212-505-4930 / Fax: 212-529-5237

RESULTS TO: D. Glorie **FAX No.:** 212-529-5237
Douglas.glorie@stvinc.com

TURNAROUND TIME: Standard (5) DAY
☐ 4 HR. ☐ 12 HR. ☐ 24 HR. ☐ 48 HI

HA	SAMPLE NO.	MATERIAL DESCRIPTION	SAMPLE LOCATION	APPROX. QUANTITY (LF/SF)	FIELD NOTES
5	5-1	Black Mastic on Vertical Pipe Boot	Ground Level at Tower Stairs		
5	5-2	Black Mastic on Vertical Pipe Boot	Ground Level at Tower Stairs		
5	5-3	Black Mastic on Vertical Pipe Boot	Ground Level at Tower Stairs		
6	6-1	Black Tar on Concrete	Ground Level Floor		
6	6-2	Black Tar on Concrete	Ground Level Floor		
6	6-3	Black Tar on Concrete	Ground Level Floor		
7	7-1	Tar on Roof of Main Crane	Main Crane		
7	7-2	Tar on Roof of Main Crane	Main Crane		
7	7-3	Tar on Roof of Main Crane	Main Crane		
8	8-1	Maintenance Crane Window Glazing	Maintenance Crane (Upper Crane)		
8	8-2	Maintenance Crane Window Glazing	Maintenance Crane (Upper Crane)		
8	8-3	Maintenance Crane Window Glazing	Maintenance Crane (Upper Crane)		

RECEIVED
NOV 14 2012
By

CHAIN OF CUSTODY

Relinquished by: Juan Zapata Jr.	(Sign)	11/12/12	5:00 AM/PM	Relinquished by: (print)	(Sign)	/ /	AM/PM	Relinquished by: (print)	(Sign)	/ /	AM/PM
Received by: (print)	(Sign)	/ /	AM/PM	Received by: (print)	(Sign)	/ /	AM/PM	Received by: (print)	(Sign)	/ /	AM/PM

GENERAL NOTES: All inconclusive NOBs to be analyzed by TEM. Please stop at 1st positive in any homogeneous group.

STV | STV INCORPORATED

ASBESTOS SURVEY DATA SHEET/ CHAIN OF CUSTODY

PROJECT NO.: 3015783
CLIENT: NNSY
PROJECT SITE: Hammerhead Crane, Norfolk, VA
Project Manager: Douglas Glorie

LOCATION(S) SURVEYED: Hammerhead Crane
PROPOSED PROJECT: Hammerhead Crane Study
DATE(S) OF INSPECTION: 11/5/12, 11/6/12
Inspector(s): Doug Glorie, Juan Zapata Jr.

112111623

STV Incorporated
225 Park Avenue South, New York, NY 10003
Phone : 212-505-4930 / Fax: 212-529-5237

RESULTS TO: D. Glorie **FAX No.:** 212-529-5237
Douglas.glorie@stvinc.com

TURNAROUND TIME: Standard (5) DAY
☐ 4 HR. ☐ 12 HR. ☐ 24 HR. ☐ 48 HI

HA	SAMPLE NO.	MATERIAL DESCRIPTION	SAMPLE LOCATION	APPROX. QUANTITY (LF/SF)	FIELD NOTES
9	9-1	Caulk on Plexiglass Windows	Entry Door to Maintenance Crane		
9	9-2	Caulk on Plexiglass Windows	Entry Door to Maintenance Crane		
9	9-3	Caulk on Plexiglass Windows	Entry Door to Maintenance Crane		
10	10-1	Insulation Paper Backing	Electrical Power Room at Ground Level		
10	10-2	Insulation Paper Backing	Electrical Power Room at Ground Level		
10	10-3	Insulation Paper Backing	Electrical Power Room at Ground Level		
11	11-1	Caulk on Slew Ring	Between Ring Floor & Elevator Shaft		
11	11-2	Caulk on Slew Ring	Between Ring Floor & Elevator Shaft		
11	11-3	Caulk on Slew Ring	Between Ring Floor & Elevator Shaft		
12	12-1	Asphaltic Pitch Pocket Material	Pitch Pockets on Main Crane's Roof		
12	12-2	Asphaltic Pitch Pocket Material	Pitch Pockets on Main Crane's Roof		
12	12-3	Asphaltic Pitch Pocket Material	Pitch Pockets on Main Crane's Roof		

RECEIVED
NOV 14 2012
By

CHAIN OF CUSTODY

Relinquished by: (print)	(Sign)			Relinquished by: (print)	(Sign)			Relinquished by: (print)	(Sign)		
Juan Zapata Jr.		11/12/12	5:00 AM/PM			/ /	AM/PM			/ /	AM
Received by: (print)	(Sign)	/ /	AM/PM	Received by: (print)	(Sign)	/ /	AM/PM	Received by: (print)	(Sign)	/ /	AM

GENERAL NOTES: All Inconclusive NOBs to be analyzed by TEM. Please stop at 1st positive in any homogeneous group.

STV | STV INCORPORATED

ASBESTOS SURVEY DATA SHEET/ CHAIN OF CUSTODY

PROJECT NO.: 3015783
CLIENT: NNSY
PROJECT SITE: Hammerhead Crane, Norfolk, VA
Project Manager: Douglas Glorie

LOCATION(S) SURVEYED: Hammerhead Crane
PROPOSED PROJECT: Hammerhead Crane Study
DATE(S) OF INSPECTION: 11/5/12, 11/6/12
Inspector(s): Doug Glorie, Juan Zapata Jr.

112111623

STV Incorporated
225 Park Avenue South, New York, NY 10003
Phone : 212-505-4930 / Fax: 212-529-5237

RESULTS TO: D. Glorie **FAX No.:** 212-529-5237
Douglas.glorie@stvinc.com

TURNAROUND TIME: Standard (5) DAY
☐ 4 HR. ☐ 12 HR. ☐ 24 HR. ☐ 48 HI

HA	SAMPLE NO.	MATERIAL DESCRIPTION	SAMPLE LOCATION	APPROX. QUANTITY (LF/SF)	FIELD NOTES
13	13-1	Brake Pad Material	Wire Rope Drum Controls – Main Crane		
13	13-2	Brake Pad Material	Wire Rope Drum Controls – Main Crane		
13	13-3	Brake Pad Material	Wire Rope Drum Controls – Main Crane		
14	14-1	White Fibrous Material	Floor Beneath Wire Rope Drum		
15	15-1	Gray Window Caulk	Around Maintenance Crane Windows		
15	15-2	Gray Window Caulk	Around Maintenance Crane Windows		
15	15-3	Gray Window Caulk	Around Maintenance Crane Windows		

CHAIN OF CUSTODY

Relinquished by: Juan Zapata Jr.	(Sign)	11/12/12	5:00 AM/PM	Relinquished by: (print)	(Sign)	/ /	AM/PM	Relinquished by: (print)	(Sign)	/ /	AM
Received by: (print)	(Sign)	/ /	AM/PM	Received by: (print)	(Sign)	/ /	AM/PM	Received by: (print)	(Sign)	/ /	AM

RECEIVED
NOV 14 2012
By

GENERAL NOTES: All inconclusive NOBs to be analyzed by TEM. Please stop at 1st positive in any homogeneous group.

Please Reply To:

AmeriSci Richmond
13635 GENITO RDAD
MIDLOTHIAN, VIRGINIA 23112
TEL: (804) 763-1200 • FAX: (804) 783-1800

FACSIMILE TELECOPY TRANSMISSION

To: Doug Glorie
STV Incorporated

Fax #:

Email: douglas.glorie@stvinc.com

From: Tiffany Goodwyn
AmeriSci Job #: 112111619
Subject: Lead (paint) 5 day Results
Client Project: 3015783; NNSY; Hammerhead Crane, Norfolk, VA

Date: Thursday, November 15, 2012
Time: 17:29:06
Comments:

Number of Pages: 4/5
(including cover sheet)

CONFIDENTIALITY NOTICE: Unless otherwise indicated, the information contained in this communication is confidential information intended for use of the individual named above. If the reader of this communication is not the intended recipient, you are hereby notified that any dissemination, distribution or copying of this communication is prohibited. If you have received this communication in error, please immediately notify the sender by telephone and return the original message to the above address via the US Postal Service at our expense. Preliminary data reported here will be verified before final report is issued. Samples are disposed of in 60 days or unless otherwise instructed by the protocol or special instructions in writing. Thank you.

SCHNEIDER LABORATORIES GLOBAL

INCORPORATED
2512 W. Cary Street • Richmond, Virginia • 23220-5117
804-353-6778 • 800-785-LABS (5227) • (FAX) 804-359-1475
Over 25 Years of Excellence in Service and Technology
AIHA/ELLAP 100527, ISO/IEC 17025, NVLAP 101150-0, NYELAP 11413, VELAP/NELAC 460135

LABORATORY ANALYSIS REPORT

Lead Analysis based on EPA 7000B Method
Using Preparation Method EPA 3050B

ACCOUNT #: 153-12-8349
CLIENT: AmeriSci Richmond
ADDRESS: 13635 Genito Road
Midlothien, VA 23112
PROJECT NAME: NNSY
JOB LOCATION: Hammerhead Crane
PROJECT NO.: 3015783
PO NO.: 112-11-1619

DATE RECEIVED: 11/14/2012
DATE ANALYZED: 11/14/2012
DATE REPORTED: 11/14/2012

Sample Type: PAINT

SLI Sample No.	Client Sample No.	Collection Date	Sample Description	Sample Wt (mg)	Total Lead (µg)	Lead Conc (% by wt)	Lead Conc PPM
31682520	LCP-1		Trolley A	301	29,862.5	9.921	99,211
31682521	LCP-2		Machinery House Trolley	300	114,118.6	38.040	380,395
31682522	LCP-3		Electrial Power Room	301	25.0	0.008	83
31682523	LCP-4		Trolley B	288	295.5	0.103	1,026
31682524	LCP-5		I Beam Supporting Wire	303	44,753.1	14.770	147,700
31682525	LCP-6		Machinery House Wall	300	100,353.8	33.451	334,513
31682526	LCP-7		Machinery House Wall	303	1,062.8	0.351	3,508
31682527	LCP-8		Slew Ring Diamond Floor	303	52.6	0.017	174
	Sample contains substrate which may affect the calculation of weight percent.						
31682528	LCP-9		18th Level Elevator Door	303	7,831.5	2.585	25,846
31682529	LCP-10		Tower Handrail	177	51,989.1	29.372	293,723
	Sample weight below SLI SOP guidelines.						
31682530	LCP-11		Elevator Motor	152	23.0	0.015	151
	Sample weight below SLI SOP guidelines.						
31682531	LCP-12		Elevator Motor	111	220.5	0.199	1,986
	Sample weight below SLI SOP guidelines.						
31682532	LCP-13		Roof Door	303	20,994.4	6.929	69,288
31682533	LCP-14		Ladder To Wire Rope Drum	302	54,460.5	18.033	180,333

Total Number of Pages in Report: 2

Results relate only to samples as received by the laboratory.

Minimum Reporting Limit: 10.0 µg. Lead Based Paint contains 0.5% lead by weight per Federal statute. The OSHA Lead in Construction Standard, 29 CFR 1926.62, is invoked if any lead is present in the sample. Lead-free paint is defined as <0.009% by weight (CPSC). All internal QC parameters were met. Unusual sample conditions, if any, are described.

SLI Sample No.	Client Sample No.	Collection Date	Sample Description	Sample Wt (mg)	Total Lead (µg)	Lead Conc (% by wt)	Lead Conc PPM
31682534	LCP-15		Diamond Floor	303	3,626.2	1.197	11,968
	Sample weight below SLI SOP guidelines.						
31682535	LCP-16		Horizontal Beam	303	406.1	0.134	1,340
31682536	LCP-17		Fire Alam Box	301	29,122.0	9.675	96,751
31682537	LCP-18		Vertical Beam	302	1,457.7	0.483	4,827
31682538	LCP-19		Light Shade Of Color Beam	300	< 10.0	< 0.003	< 33
31682539	LCP-20		Electrical Power Room	52	23.0	0.044	442
	Sample weight below SLI SOP guidelines.						

Analysis Run ID: 50802

Analyst: **Ryan Smith**

Total Number of Pages in Report: 2

Results relate only to samples as received by the laboratory.

O. Elshowaya

Reviewed By **Omar H. Elshowaya, Analyst**

Visit www.slabinc.com for current certifications.

Minimum Reporting Limit: 10.0 µg. Lead Based Paint contains 0.5% lead by weight per Federal statute. The OSHA Lead in Construction Standard, 29 CFR 1926.62, is invoked if any lead is present in the sample. Lead-free paint is defined as <0.009% by weight (CPSC). All internal QC parameters were met. Unusual sample conditions, if any, are described.

STV INCORPORATED

LEAD PAINT SURVEY DATA SHEET/ CHAIN OF CUSTODY

PROJECT NO.: 3015783
CLIENT: NNSY
PROJECT SITE: Hammerheed Crane, Norfolk, VA
Project Manager: Douglas Glorie

LOCATION(S) SURVEYED: Hammerhead Crane
PROPOSED PROJECT: Hammarhead Crane Study
DATE(S) OF INSPECTION: 11/5/12, 11/6/12
Inspector(s): Doug Glorie, Juan Zapata Jr.

112111619

FLOOR LEVEL/	AREA LOCATION	AREA DESCRIPTION	SAMPLE NO.	TESTING COMBINATION: STRUCTURE/ BUILDING COMPONENT	TESTING COMBINATION: SUBSTRATE	SURFACE MATERIAL	SIZE OF SAMPLE	COLOR	QUANTITY SF or LF	CONDITION	RESULTS (% by Weig
	Main Crane	Trolley A	LCP-1	Trolley	Metal	Peint	2" Sq.	Yellow		Poor	
	Main Crane	Machinery House Trolley	LCP-2	Trolley	Metal	Paint	4" Sq.	Yellow		Poor	
	Power Room	Electrical Power Room	LCP-3	Generator	Metal	Paint	4" Sq.	Gray		Poor	
	Main Crane	Trolley B	LCP-4	Trolley	Metal	Paint	2" Sq.	Yallow		Poor	
	Main Crane	I-Beam Supporting Wire Rope Drum	LCP-5	Wire Rope Drum	Metal	Paint	3" Sq.	Gray		Poor	
	Main Crane	Machinery House Wall	LCP-6	Wall	Metal	Paint	4" Sq.	Silver		Poor	
	Main Crene	Machinery House Well	LCP-7	Wall	Metal	Paint	5" Sq.	Tan		Poor	
	Slew Ring	Slew Ring Diamond Floor	LCP-8	Floor	Metal	Paint	2" Sq.	Red		Poor	
	Elevator Sheft	18th Level Elevator Door	LCP-9	Door	Metal	Paint	2" Sq.	Brown		Fair	
	Handrail	Tower Handrail	LCP-10	Handrail	Metal	Paint	2" Sq.	Yellow		Fair	
	Elevator Room	Elevator Motor	LCP-11	Motor	Metal	Paint	2" Sq.	Green		Feir	

PHYSICAL CONDITION ASSESSMENT
Intact - Entire surface is intact
Fair - Less than or equal to 10 square feet
Poor - More than 10 square feet.

A- ASSUMED (NOT SAMPLED)
AAS - ATOMIC ABSORPTION SPECTROMETRY
XRF - X RAY FLOURESCENT

CHAIN OF CUSTODY

Type of Analysis: AAS
Turnaround Time 6 hrs 12 hrs 24 hrs 48 hrs 72 hrs **5 days**

		DATE	TIME
Relinquished by: Juan Zapata Jr. (print)	(Sign)	11/12/12	5:00 AM/PM
Received by: (print)	(Sign)	/ /	AM/PM
Relinquished by: (print)	(Sign)	/ /	AM/PM
Received by: (print)	(Sign)	/ /	AM/PM

RECEIVED NOV 14 2012 By

CERT. NO.:
NAME:
SIGNATURE:

STV Incorporated, 225 Park Avenue South, New York, NY 10003
Phone : 212-505-4930 / Fax: 212-529-5237

TASKS COMPLETED:
1. A visual determination of accessible painted surfaces and condition.
2. Collect paint chip samples of suspect surfaces of building components.
3. Quantify the amount of painted surfaces in their respective locations.
6. Submit bulk samples for analysis by AAS
7. Sample locations and suspect materials were identified on the appropriate building floor plan diagram with the sample number (optional).
8. A Chain of Custody record accompanied the samples to the laboratory

D NOTES: RESULTS TO: D. Glorie FAX No.: 212-529-5237, Douglas.glorie@stvinc.com

NOTES: REPORT RESULTS IN PERCENT (%) BY WEIGHT

QAQC SAMPLE VALIDATION | **QC MANAGER:** | **IS THE ABOVE DATA VALID?** ☐ YES ☐ NO | **SIGNATURE:**

White Copy - Project Manager Yellow Copy - Laboratory

STV INCORPORATED

LEAD PAINT SURVEY DATA SHEET/ CHAIN OF CUSTODY

PROJECT NO.: 3015783
CLIENT: NNSY
PROJECT SITE: Hammerhead Crane, Norfolk, VA
Project Manager: Douglas Glorie

LOCATION(S) SURVEYED: Hammerhead Crane
PROPOSED PROJECT: Hammerhead Crane Study
DATE(S) OF INSPECTION: 11/5/12, 11/6/12
Inspector(s): Doug Glorie, Juan Zapata Jr.

112111619

LEVEL/ FLOOR	AREA LOCATION	AREA DESCRIPTION	SAMPLE NO.	TESTING COMBINATION: STRUCTURE/ BUILDING COMPONENT	TESTING COMBINATION: SUBSTRATE	SURFACE MATERIAL	SIZE OF SAMPLE	COLOR	QUANTITY SF or LF	CONDITION	RESULTS (% by Weight)
	Elevator Room	Elevator Motor	LCP-12	Motor	Metal	Paint	2" Sq.	Black		Fair	
	Elevator Room	Roof Door	LCP-13	Door	Metal	Paint	2" Sq.	Green		Poor	
	Wire Rope Drum Room	Ladder to Wire Rope Drum Controls	LCP-14	Ladder	Metal	Paint	2" Sq.	Yellow		Poor	
	Floor	Diamond Floor	LCP-15	Floor	Metal	Paint	4" Sq.	Brown		Poor	
	Beam	Horizontal Beam	LCP-16	Beam	Metal	Paint	2" Sq.	Green		Poor	
	Bulkhead	Fire Alarm Box	LCP-17	FA Box	Metal	Paint	3" Sq.	Yellow		Poor	
	Beam	Vertical Beam	LCP-18	Beam	Metal	Paint	2" Sq.	Green		Poor	
	Beam	Light Shade of Color on Beam	LCP-19	Beam	Metal	Paint	2" Sq.	Light Green		Poor	
	Power Room	Electrical Power Room	LCP-20	Door	Metal	Paint	2" Sq.	Black		Fair	

PHYSICAL CONDITION ASSESSMENT
Intact - Entire surface is intact
Fair - Less than or equal to 10 square feet
Poor - More than 10 square feet

A- ASSUMED (NOT SAMPLED)
AAS - ATOMIC ABSORPTION SPECTROMETRY
XRF - X RAY FLOURESCENT

CHAIN OF CUSTODY

Type of Analysis: AAS
Turnaround Time 6 hrs 12 hrs 24 hrs 48 hrs 72 hrs 5 days

		DATE	TIME
Relinquished by: Juan Zapata Jr. (print)	(Sign)	11/12/12	5:00 AM/PM
Received by: (print)	(Sign)	/ /...	AM/PM
Relinquished by: (print)	(Sign)	/ /...	AM/PM
Received by: (print)	(Sign)	/ /...	AM/PM

RECEIVED NOV 14 2012 By

CERT. NO.:
NAME:
SIGNATURE:

STV Incorporated, 225 Park Avenue South, New York, NY 10003
Phone : 212-505-4030 / Fax: 212-529-5237
TASKS COMPLETED:
1. A visual determination of accessible painted surfaces and condition.
2. Collect paint chip samples of suspect surfaces of building components.
3. Quantify the amount of painted surfaces in their respective locations.
6. Submit bulk samples for analysis by AAS
7. Sample locations and suspect materials were identified on the appropriate building floor plan diagram with the sample number (optional).
8. A Chain of Custody record accompanied the samples to the laboratory

D NOTES: RESULTS TO: D. Glorie FAX No.: 212-529-5237, Douglas.glorie@stvinc.com

NOTES: REPORT RESULTS IN PERCENT (%) BY WEIGHT

QAQC SAMPLE VALIDATION | **QC MANAGER:** | **IS THE ABOVE DATA VALID?** ☐ YES ☐ NO | **SIGNATURE:**

White Copy -- Project Manager Yellow Copy - Laboratory

14-10
Sample Location Plan

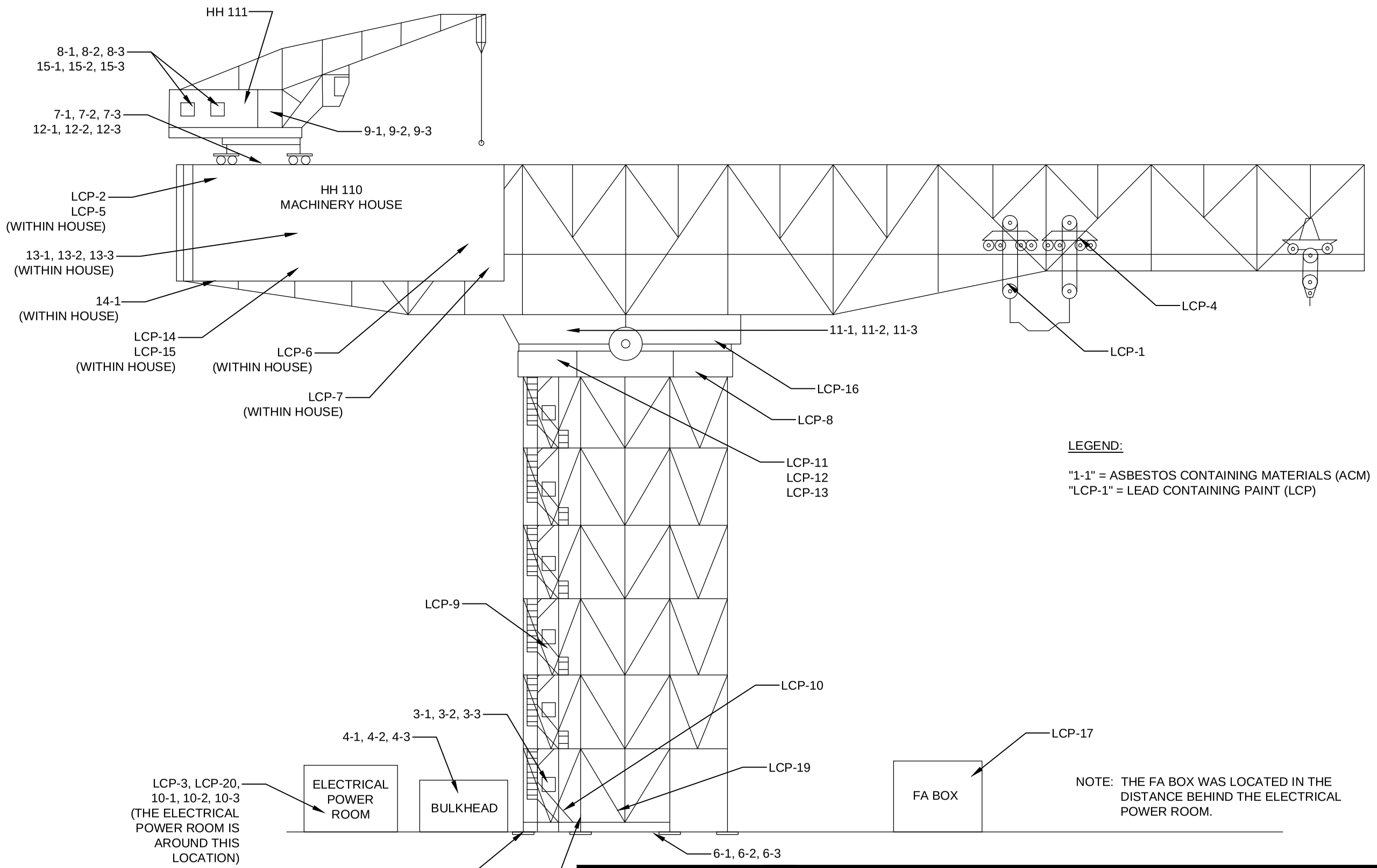

LEGEND:

"1-1" = ASBESTOS CONTAINING MATERIALS (ACM)
"LCP-1" = LEAD CONTAINING PAINT (LCP)

NOTE: THE FA BOX WAS LOCATED IN THE DISTANCE BEHIND THE ELECTRICAL POWER ROOM.

SCALE: NTS

STV 100 Years

STV Incorporated

225 PARK AVENUE SOUTH, N.Y., N.Y. 10003

NAVFAC

DEPARTMENT OF THE NAVY
NAVAL FACILITIES ENGINEERING COMMAND
NAVFAC MIDLANT
PWD PORTSMOUTH PORTSMOUTH, VIRGINIA

CONTRACT NUMBER: XXXXXX–XX–X–XXXX

SAMPLE LOCATION PLAN

NORFOLK NAVAL SHIPYARD PORTSMOUTH, VIRGINIA

HAMMERHEAD CRANE

DATE: 1-9-2013

FIGURE NUMBER: 1

FILE NAME: I:\Projects\3015783\3015783_0001\90_CAD Models and Sheets\04_C_Civil\Crane_Sample_Location.dwg LAYOUT NAME: Layout1 PLOTTED: Tuesday, January 08, 2013 – 4:31pm

14-11
Inspection Summary Tables

Table 14.11.1 - Summary of Limited Asbestos Inspection Results
Table 14.11.2 - Summary of Positive Asbestos Bulk Sample Results
Table 14.11.3 - Summary of Limited Lead-Containing Paint Inpsection Results
Table 14.11.4 - Summary of Positive Lead-Containing Paint Sample Results
Table 14.11.5 - Summary of Suspect Universal Waste with Locations

TABLE 14.11.1
SUMMARY OF LIMITED ASBESTOS ANALYTICAL RESULTS
NAVFAC - NORFOLK NAVAL SHIPYARD, PORTSMOUTH, VA 23709
HAMMERHEAD CRANE STUDY

HOMOGENEOUS AREA	SAMPLE NUMBER	MATERIAL DESCRIPTION	SAMPLE LOCATION	PLM RESULT	TEM RESULT
1	1-1	Black Joint Filler	Concrete Joints to Base of Crane (Tower)	NAD	NAD
1	1-2	Black Joint Filler	Concrete Joints to Base of Crane (Tower)	NAD	NAD
1	1-3	Black Joint Filler	Concrete Joints to Base of Crane (Tower)	NAD	NAD
2	2-1	Mastic on Steam Pipe Joints	Pipe Joints	NAD	NAD
2	2-2	Mastic on Steam Pipe Joints	Pipe Joints	NAD	NAD
2	2-3	Mastic on Steam Pipe Joints	Pipe Joints	NAD	NAD
3	3-1	Caulk Around Windows	Elevator "Window" Corrugated Gated Openings	NAD	NAD
3	3-2	Caulk Around Windows	Elevator "Window" Corrugated Gated Openings	NAD	NAD
3	3-3	Caulk Around Windows	Elevator "Window" Corrugated Gated Openings	NAD	NAD
4	4-1	Brown Fibrous Material Between Concrete Bulkhead	Concrete Bulkhead: 350/375/400	NAD	NAD
4	4-2	Brown Fibrous Material Between Concrete Bulkhead	Concrete Bulkhead: 350/375/400	NAD	NAD
4	4-3	Brown Fibrous Material Between Concrete Bulkhead	Concrete Bulkhead: 350/375/400	NAD	NAD
5	5-1	Black Mastic on Vertical Pipe Boot	Ground Level at Tower Stairs	NAD	NAD
5	5-2	Black Mastic on Vertical Pipe Boot	Ground Level at Tower Stairs	NAD	NAD
5	5-3	Black Mastic on Vertical Pipe Boot	Ground Level at Tower Stairs	NAD	NAD
6	6-1	Black Tar on Concrete	Ground Level Floor	NAD	NAD
6	6-2	Black Tar on Concrete	Ground Level Floor	NAD	NAD
6	6-3	Black Tar on Concrete	Ground Level Floor	NAD	NAD
7	7-1	Tar on Roof of Main Crane	Main Crane	NAD	NAD
7	7-2	Tar on Roof of Main Crane	Main Crane	NAD	NAD
7	7-3	Tar on Roof of Main Crane	Main Crane	NAD	NAD
8	8-1	Maintenance Crane Window Glazing	Maintenance Crane (Upper Crane)	NAD	NAD
8	8-2	Maintenance Crane Window Glazing	Maintenance Crane (Upper Crane)	NAD	NAD
8	8-3	Maintenance Crane Window Glazing	Maintenance Crane (Upper Crane)	NAD	NAD
9	9-1	Caulk on Plexiglass Windows	Entry Door to Maintenance Crane	NAD	NAD
9	9-2	Caulk on Plexiglass Windows	Entry Door to Maintenance Crane	NAD	NAD
9	9-3	Caulk on Plexiglass Windows	Entry Door to Maintenance Crane	NAD	NAD
10	10-1	Insulation Paper Backing	Electrical Power Room at Ground Level	NAD	NAD
10	10-2	Insulation Paper Backing	Electrical Power Room at Ground Level	NAD	NAD
10	10-3	Insulation Paper Backing	Electrical Power Room at Ground Level	NAD	NAD
11	11-1	Caulk on Slew Ring	Between Ring Floor & Elevator Shaft	NAD	NAD
11	11-2	Caulk on Slew Ring	Between Ring Floor & Elevator Shaft	NAD	NAD
11	11-3	Caulk on Slew Ring	Between Ring Floor & Elevator Shaft	NAD	NAD
12	12-1	Asphaltic Pitch Pocket Material	Pitch Pockets on Main Crane's Roof	Chrysotile 8%	NA
12	12-2	Asphaltic Pitch Pocket Material	Pitch Pockets on Main Crane's Roof	NA/PS	NA
12	12-3	Asphaltic Pitch Pocket Material	Pitch Pockets on Main Crane's Roof	NA/PS	NA
13	13-1	Brake Pad Material	Wire Rope Drum Controls – Main Crane	Chrysotile 90%	NA
13	13-2	Brake Pad Material	Wire Rope Drum Controls – Main Crane	NA/PS	NA
13	13-3	Brake Pad Material	Wire Rope Drum Controls – Main Crane	NA/PS	NA
14	14-1	White Fibrous Material	Floor Beneath Wire Rope Drum	NAD	NAD
15	15-1	Gray Window Caulk	Around Maintenance Crane Windows	Chrysotile 3%	NA
15	15-2	Gray Window Caulk	Around Maintenance Crane Windows	NA/PS	NA
15	15-3	Gray Window Caulk	Around Maintenance Crane Windows	NA/PS	NA
Assumed	Assumed	Electrical Wire Insulation/Panels (Assumed)	Electrical Cabinets within Machinery Houses	Assumed	Assumed
Assumed	Assumed	Roofing Materials (Assumed)	Materials directly above Machinery Houses	Assumed	Assumed
Assumed	Assumed	Exterior Window Caulk (Assumed)	Exterior of Machinery House Windows	Assumed	Assumed

NA = Not Analyzed
NAD = No Asbestos Detected During a Quantitative Analysis
NA/PS = No Asbestos / Positive Stop

TABLE 14.11.2
SUMMARY OF POSITIVE ASBESTOS BULK SAMPLE RESULTS
NAVFAC - NORFOLK NAVAL SHIPYARD, PORTSMOUTH, VA 23709
HAMMERHEAD CRANE STUDY

MATERIAL DESCRIPTION	SAMPLE LOCATION	FRIABILITY	CONDITION	APPROXIMATE QUANTITY (1)	UNITS
Asphaltic Pitch Pocket Material	Pitch Pockets on Main Crane's Roof	Non-Friable	Damaged	50	SF
Brake Pad Material	Wire Rope Drum Controls – Main Crane	Non-Friable	Good	2	EA
Gray Window Caulk	Around Maintenance Crane Windows	Friable	Damaged	130	LF
Electrical Wire Insulation (Assumed)	Electrical Cabinets within Machinery Houses	Non-Friable	Good	2800	LF
Electrical Panels (Assumed)	Electrical Cabinets within Machinery Houses	Non-Friable	Good	20	SF
Roofing Materials (Assumed)	Materials directly above Machinery Houses	Non-Friable	Damaged	1050	SF
Exterior Window Caulk (Assumed)	Exterior of Machinery House Windows	Friable	Damaged	20	LF

1. Approximate Quantities are based on the confirmed and assumed asbestos containing materials expected to be impacted by the proposed limited scope of work.

TABLE 14.11.3
SUMMARY OF LIMITED LEAD-CONTAINING PAINT ANALYTICAL RESULTS
NAVFAC - NORFOLK NAVAL SHIPYARD, PORTSMOUTH, VA 23709
HAMMERHEAD CRANE STUDY

SAMPLE NUMBER	FLOOR	LOCATION	COMPONENT	SUBSTRATE	CONDITION	COLOR	LABORATORY RESULT (% BY WEIGHT)
LCP-1	Boom	Trolley A	Trolley	Metal	Poor	Yellow	9.921 % wt
LCP-2	Boom	Machinery House Trolley	Trolley	Metal	Poor	Yellow	38.040 % wt
LCP-3	Ground	Electrical Power Room	Generator	Metal	Poor	Gray	0.008 % wt
LCP-4	Boom	Trolley B	Trolley	Metal	Poor	Yellow	0.103 % wt
LCP-5	Machinery House	I-Beam Supporting Wire Rope Drum	Wire Rope Drum	Metal	Poor	Gray	14.770 % wt
LCP-6	Machinery House	Machinery House Wall	Wall	Metal	Poor	Silver	33.451 % wt
LCP-7	Machinery House	Machinery House Wall	Wall	Metal	Poor	Tan	0.351 % wt
LCP-8	Slew Ring	Slew Ring Diamond Floor	Floor	Metal	Poor	Red	0.017 % wt
LCP-9	Elevator Shaft	18th Level Elevator Door	Door	Metal	Fair	Brown	2.585 % wt
LCP-10	Ground	Tower Handrail	Handrail	Metal	Poor	Yellow	29.372 % wt
LCP-11	Elevator Room	Elevator Motor	Motor	Metal	Fair	Green	0.015 % wt
LCP-12	Elevator Room	Elevator Motor	Motor	Metal	Fair	Black	0.199 % wt
LCP-13	Elevator Room	Room Door	Door	Metal	Poor	Green	6.929 % wt
LCP-14	Wire Rope Drum Room	Ladder to Wire Rope Drum Controls	Ladder	Metal	Poor	Yellow	18.033 % wt
LCP-15	Floor	Diamond Floor	Floor	Metal	Poor	Brown	1.197 % wt
LCP-16	Beam	Horizontal Beam	Beam	Metal	Poor	Green	0.134 % wt
LCP-17	Ground	Fire Alarm Box	FA Box	Metal	Poor	Yellow	9.675 % wt
LCP-18	Beam	Vertical Beam	Beam	Metal	Poor	Green	0.483 % wt
LCP-19	Beam	Light Shade of Color on Beam	Beam	Metal	Poor	Light Green	<0.003 % wt
LCP-20	Ground	Electrical Power Room	Door	Metal	Fair	Black	0.044 % wt

TABLE 14.11.4
SUMMARY OF POSITIVE LEAD-CONTAINING PAINT SAMPLE RESULTS
NAVFAC - NORFOLK NAVAL SHIPYARD, PORTSMOUTH, VA 23709
HAMMERHEAD CRANE STUDY

SAMPLE NUMBER	FLOOR	LOCATION	COMPONENT	SUBSTRATE	CONDITION	COLOR	LABORATORY RESULT (% BY WEIGHT)	APPROXIMATE QUANTITY	UNITS
LCP-1	Boom	Trolley A	Trolley	Metal	Poor	Yellow	9.921 % wt	300	SF
LCP-2	Boom	Machinery House Trolley	Trolley	Metal	Poor	Yellow	38.040 % wt	300	SF
LCP-3	Ground	Electrical Power Room	Generator	Metal	Poor	Gray	0.008 % wt	25	SF
LCP-4	Boom	Trolley B	Trolley	Metal	Poor	Yellow	0.103 % wt	300	SF
LCP-5	Machinery House	I-Beam Supporting Wire Rope Drum	Wire Rope Drum	Metal	Poor	Gray	14.770 % wt		SF
LCP-6	Machinery House	Machinery House Wall	Wall	Metal	Poor	Silver	33.451 % wt	3300	SF
LCP-7	Machinery House	Machinery House Wall	Wall	Metal	Poor	Tan	0.351 % wt		
LCP-8	Slew Ring	Slew Ring Diamond Floor	Floor	Metal	Poor	Red	0.017 % wt	1500	SF
LCP-9	Elevator Shaft	18th Level Elevator Door	Door	Metal	Fair	Brown	2.585 % wt	32	SF
LCP-10	Ground	Tower Handrail	Handrail	Metal	Poor	Yellow	29.372 % wt	31300	LF
LCP-11	Elevator Room	Elevator Motor	Motor	Metal	Fair	Green	0.015 % wt	50	SF
LCP-12	Elevator Room	Elevator Motor	Motor	Metal	Fair	Black	0.199 % wt		
LCP-13	Elevator Room	Room Door	Door	Metal	Poor	Green	6.929 % wt	32	SF
LCP-14	Wire Rope Drum Room	Ladder to Wire Rope Drum Controls	Ladder	Metal	Poor	Yellow	18.033 % wt	20	LF
LCP-15	Floor	Diamond Floor	Floor	Metal	Poor	Brown	1.197 % wt	2500	SF
LCP-16	Beam	Horizontal Beam	Beam	Metal	Poor	Green	0.134 % wt	16600	SF
LCP-17	Ground	Fire Alarm Box	FA Box	Metal	Poor	Yellow	9.675 % wt	20	SF
LCP-18	Beam	Vertical Beam	Beam	Metal	Poor	Green	0.483 % wt	10000	SF
LCP-20	Ground	Electrical Power Room	Door	Metal	Fair	Black	0.044 % wt	32	SF

TABLE 14.11.5
SUMMARY OF SUSPECT UNIVERSAL WASTE WITH LOCATIONS
NAVFAC - NORFOLK NAVAL SHIPYARD, PORTSMOUTH, VA 23709
HAMMERHEAD CRANE STUDY

Area Name	PCB-Containing Light Ballasts	Fluorescent Lights Fixtures	Fluorescent Lights Bulbs	High Intensity Discharge Lamps	PCB-Containing Transformer Oil (Gallons)
Upper Rails of HH 110 Boom	0	0	0	20	0
Lower Rails of HH 110 Boom	0	0	0	16	0
Slew Ring	0	0	0	12	0
Tower Handrails	0	0	0	22	0
HH111 (Maintenance Crane Machinery House)	0	0	0	4	0
Exterior (Ground Level) at Base of Crane	0	0	0	0	255
Power House	8	8	16	0	5

14-12
Photograph Log

Photographs taken on November 5-6, 2012

A1	**Cross bracing depicting Lead-Containing Paint (LCP) on all sides**

A2	**Yellow Handrail Paint on Tower Stairs (LCP Positive)**

A3	**Diamond Floor of Slew Ring (LCP Positive)**

A4	**Cable Festoon at HH110 Boom (Assumed ACM)**

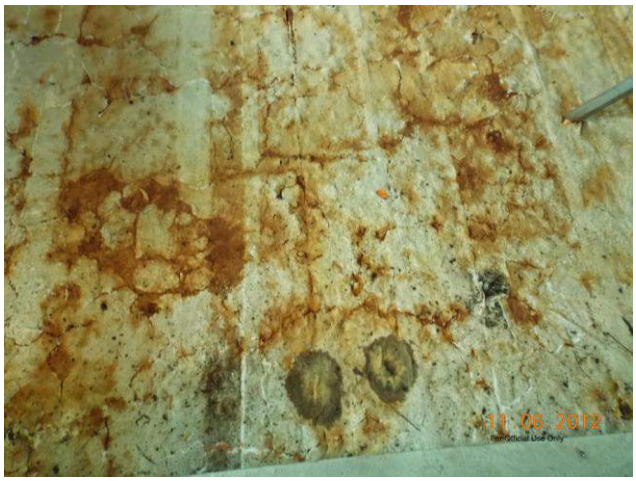

A5	**White Fibrous Material (Under Wire Rope Drum in HH 110 Machinery House)**

A6	**Yellow Paint (LCP Positive) on Trolley**

A7	**Electrical Cabinet Wiring (Assumed for ACM & Pb)**

A8	**Window Caulk**

A9	**Insulation Paper Backing in Generator Room**

A10	**Resistor Bank**

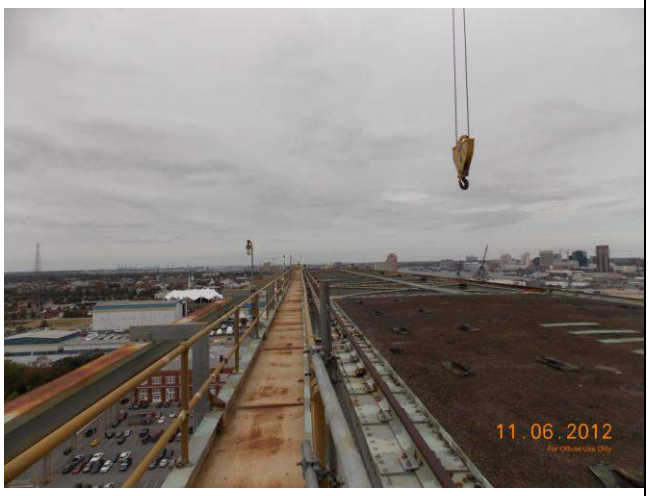

A11	**HH 110 Roof Depicting Materials Assumed ACM**

A12	**Lead Covered Interior Walls of HH 110 Machinery House**

14-13
Homogenous Area Forms

HOMOGENEOUS AREA SHEET

Client: Naval Facilities Engineering Command
Inspector(s): J. Zapata
Facility: Hammerhead Crane

Date: 11/5/12, 11/6/12
Project #: 3015783
Location: NAVFAC - Norfolk Naval Shipyard, Portsmouth, VA 23709

HA #	Homogenous Area Description	Location(s)	Total Quantity	Photo #	Assume ACM	Total # of Samples
1	Black Joint Filler	Concrete Joints to Base of Crane (Tower)	200 SF	NA	Yes * Yes** No ***	3
2	Mastic on Steam Pipe Joints	Pipe Joints	20 SF	NA	Yes * Yes** No ***	3
3	Caulk Around Windows	Elevator "Window" Corrugated Gated Openings	200 LF	A8	Yes * Yes** No ***	3
4	Brown Fibrous Material Between Concrete Bulkhead	Concrete Bulkhead: 350/375/400	160 SF	NA	Yes * Yes** No ***	3
5	Black Mastic on Vertical Pipe Boot	Ground Level at Tower Stairs	200 SF	NA	Yes * Yes** No ***	3
6	Black Tar on Concrete	Ground Level Floor	120 SF	NA	Yes * Yes** No ***	3
7	Tar on Roof of Main Crane	Main Crane	140 SF	A11	Yes * Yes** No ***	3
8	Maintenance Crane Window Glazing	Maintenance Crane (Upper Crane)	180 LF	A8	Yes * Yes** No ***	3
9	Caulk on Plexiglass Windows	Entry Door to Maintenance Crane	30 LF	A8	Yes * Yes** No ***	3
10	Insulation Paper Backing	Electrical Power Room at Ground Level	50 SF	NA	Yes * Yes** No ***	3

***- Assumed ACM Due To Inaccessibility or Operational/Live Equipment, ** - Assumed ACM Based Upon Previous Inspection Data, ***- Non-ACM Based Upon Previous Inspection Data**

Typical Materials To Inspect (Continued on next page):

1. Thermal System Insulation	**2. Floor Tile and Mastic**	**3. Ceiling Tile**	**4. Roofing Materials (Multiple Layers)**
5. Ceiling Plaster (Multiple Layers)	**6. Wall Plaster (Multiple Layers)**	**7. Gypsum Board and Joint Cmpd**	**8. CMU and Brick Mortar**
9. Interior and Exterior Caulk	**10. Widow Glazing (Putty)**	**11. Transite Panels**	**12. Roof Flashing**
13. Pipe Gaskets	**14. Fire Brick and Mortar**	**15. Leveling Compound**	**16. Fireproofing**

HOMOGENEOUS AREA SHEET

Client: Naval Facilities Engineering Command
Inspector(s): J. Zapata
Facility: Hammerhead Crane

Date: 11/5/12, 11/6/12
Project #: 3015783
Location: NAVFAC - Norfolk Naval Shipyard, Portsmouth, VA 23709

HA #	Homogenous Area Description	Location(s)	Total Quantity	Photo #	Assume ACM	Total # of Samples
11	Caulk on Slew Ring	Between Ring Floor & Elevator Shaft	60 LF	NA	Yes * Yes** No ***	3
12	Asphaltic Pitch Pocket Material	Pitch Pockets on Main Crane's Roof	130 SF	A11	Yes * Yes** No ***	3
13	Brake Pad Material	Wire Rope Drum Controls – Main Crane	10 SF	NA	Yes * Yes** No ***	3
14	White Fibrous Material	Floor Beneath Wire Rope Drum	130 SF	A5	Yes * Yes** No ***	3
15	Gray Window Caulk	Around Maintenance Crane Windows	180 LF	A8	Yes * Yes** No ***	3

***- Assumed ACM Due To Inaccessibility or Operational/Live Equipment, ** - Assumed ACM Based Upon Previous Inspection Data, ***- Non-ACM Based Upon Previous Inspection Data**

Typical Materials To Inspect (Continued on next page):

1. Thermal System Insulation	**2. Floor Tile and Mastic**	**3. Ceiling Tile**	**4. Roofing Materials (Multiple Layers)**
5. Ceiling Plaster (Multiple Layers)	**6. Wall Plaster (Multiple Layers)**	**7. Gypsum Board and Joint Cmpd**	**8. CMU and Brick Mortar**
9. Interior and Exterior Caulk	**10. Widow Glazing (Putty)**	**11. Transite Panels**	**12. Roof Flashing**
13. Pipe Gaskets	**14. Fire Brick and Mortar**	**15. Leveling Compound**	**16. Fireproofing**

ATTACHMENT 15
Existing Documents

ATTACHMENT

Table of Contents

Attachment 15 – Existing Documents
- 15-1 – List of Existing Drawings
- 15-2 – List of Documents Other Than Drawings and Sketches

15-1
List of Existing Drawings

PREVIOUSLY EXISTING DRAWINGS AND SKETCHES

Hall & Hodges		
Foundation Drawings		
ca. 1939		
Sheet #	PW #	Title
1768-1	36699	Anchors and Washers
133-A	36700	Hammerhead Crane Fdn
133-B	36701	Turent Turning Machines
135-C	36702	Turrent, Furnace, & Barbette Fdn
9145	36703	Hammerhead Crane Fdn

American Bridge Company		
General Drawings		
ca. 1939		
Sheet #	PW #	Title
1	36386	General Drawing
3	36388	Stresses in Rotor Trusses
5	36390	Tower, Data for Elevator Shaft
6	36391	Trolley Girders
7	36392	Cross Sections
8	36393	Truss Diagram & Material
9	36394	King Pin, Spider
10	36395	Design of Octagonal & Radial Girders
11	36396	Pinion Girder & Frame @ L10, Top Lateral Bracing
12	36397	Pinion Girder and Fram @ L6, King Pin Girder, Truss Girders L6 & L10
13	36398	Walkways & Stairs @ Bottom Chord Level
14	36399	Walkways & Stairs @ Trolley Beam level
15	36400	Stairs to Rear of Center of Totation
16	36401	Machinery House
17	36402	Machienry House Details
18	36403	Cambered Lengths
19	36404	Concrete Counterweight
20	36405	Centers of Gravity

American Bridge Company		
D-Sheets		
ca. 1939		
Tower, Contract H2221/H2231		
Sheet #	PW #	Title
D1	42895	Bracing, 1st Tier & Col. Base
D2	42896	Bracing, Upper Tiers, & Col. Splice
D3	42897	Bracing, 1st Tier
D4	42898	Erection Strut (Center of Tower)
D5	36407	Framing for Future House
Drum Girders, Rollers, Etc., Contract H2222/H2232		
Sheet #	PW #	Title
D1	42894	King Pin Assembly
D2	42880	Girders Supporting Rollers
D4	42878	Pinion Girder
D5	42873	Pinion Girder
D6	42877	Rotor Spud Lock
D7	36422	Spider and Rollers
D9	36425	Pinion Girder
Rotor, Contract H2223/H2233		
Sheet #	PW #	Title
D1	42884	Crane Beam Connections
D2	42883	Truss, Panel Points 0 to 3
D3	36517	Truss, Panel Points 4 to 7
D4	42876	Truss, Panel Points 8 to 11
D5	42874	Truss, Panel Points 12 to 15
D6	42892	Truss, Panel Points 16 to 19
D7	42881	Truss, Panel Points 20 to 22
D8	42882	Frams @ Panel Points 6, 8, & 10
D9	42893	Sheave Supports @ U22-L22
D13	42879	Spud Lock & Rail Splice, for 15 T. Cr.
D101	36522	Collector Wire Supports
D102	36542	Method of Opening Hatch

Stairs, Platforms, Etc., Contract H2224/H2234		
Sheet #	PW #	Title
D5	42887	Walkways & Stairs @ Rear of Rotor
D6	42888	Balcony around Octagonal Girders
D7	36588	Elevator Shaft, Top Part
D8	36589	Elevator Shaft, Bottom Part
D9	42886	Elevator Shaft & Stairways
D10	42889	Elevator Shaft & Stairways
D11	42890	Typical Stairs around Elevator Shaft
D12	42891	Access Platform for Machine House Crane

American Bridge Company		
Construction Drawings		
Tower		
Contract H2221/H2231		
ca. 1939		
Sheet #	PW #	Title
E1	36408	Erection Diagram
1AB	36446	Columns
1B	36444	Columns
2AB	36447	Columns
2B	36445	Columns
3	36438	Columns
4	36439	Bracing
5	36440	Bracing
6	36441	Bracing
7	36442	Bracing
8	36443	Erection Post

American Bridge Company		
Construction Drawings		
Turntable Assembly		
Contract H2222/H2232		
ca. 1939		
Lower Turntable Assembly		
Sheet #	PW #	Title
E1	36427	Erection Diagram
1	36424	Radial Girders
2AB	36429	Octagonal Girders (Web)
2B	36419	Octagonal Girders (Flange)
3	36410	King Pin, Rollers, Etc.
4	36411	Spider
5	36412	Castings
6	36413	Tread Plates
Upper Turntable Assembly		
Sheet #	PW #	Title
E2	36428	Erection Diagram
7AD	36432	Bottom Chord
7BD	36434	Bottom Chord
7CD	36436	Bottom Chord
7D	36423	Bottom Chord
8AD	36433	Bottom Chord
8BD	36435	Bottom Chord
8CD	36437	Bottom Chord
8D	36426	Bottom Chord
9AB	36430	Pinion Girders
9B	36420	
10AB	36431	Pinion Girders
10B	36421	Pinion Girders
11	36414	Tread Girders
12	36415	King Pin Girder
13	36416	Tread Plates
14	36417	Latt. Girder
15	36418	Latt. Girder & Brace

American Bridge Company		
Construction Drawings		
Boom		
Contract H2223/H2233		
ca. 1939		
Sheet #	PW #	Title
E1	36524	Erection Diagrams
E2	36525	Erection Diagrams
E3	36526	Erection Diagrams
E4	36527	Erection Diagrams
1AB	36528	Trusses - Top Chords
1B	36510	Trusses - Top Chords
2AB	36529	Trusses - Top Chords
2B	36511	Trusses - Top Chords
3AB	36530	Trusses - Top Chords
3B	36512	Trusses - Top Chords
4AC	36533	Trusses - Top Chords
4BC	36534	Trusses - Top Chords
4C	36515	Trusses - Top Chords
6B	36513	Trusses - Top Chords
7	36449	Trusses - Bottom Chords
8	36450	Trusses - Bottom Chords
9	36451	Trusses - Bottom Chords
10	36452	Trusses - Bottom Chords
11	36453	Trusses - Bottom Chords
12AB	36532	Trusses - Bottom Chords
12B	36514	Trusses - Bottom Chords
13	36455	Trusses - Bottom Chords
14	36456	Trusses - Verticals
15	36457	Trusses - Verticals
16	36458	Trusses - Verticals
17	36459	Trusses - Diagonals
18	36460	Trusses - Diagonals
19	36461	Trusses - Verticals
20	36462	Trusses - Diagonals
21	36463	Trusses - Diagonals
22	36464	Trusses - Verticals
23	36465	Trusses - Verticals
24	36466	Trusses - Verticals
25	36467	Trusses - Diagonals

26	36468	Trusses - Diagonals
27	36469	Trusses - Diagonals
28	36470	Trusses - Diagonals
29	36471	Trusses - Verticals
30	36472	Sway Bracing
31	36473	Sway Bracing
32	36474	Sway Bracing
33	36475	Sway Bracing
34	36476	Sway Bracing
35	36477	Sway Bracing
36	36478	Main Crane Runway Beams
37	36479	Main Crane Runway Beams
38	36480	Bottom Laterals
39	36481	Bottom Laterals
40	36482	Top Laterals
41	36483	Top Laterals
42	36484	Top Laterals
43	36485	Counterweight Box
44	36486	Counterweight Box
45	36487	Bottom Strut @ Lo
46	36488	Top Strust @ Lo
47	36489	Machine House Support Beams
48	36490	Machine House Support Beams
49	36491	Machine House Floor Plates
50	36492	Machine House Floor Plates
51	36493	Machine House Floor Plates
52	36494	Machine House Floor Beams
53	36495	Machine House Floor Beams
54	36496	Machine House Floor Beams
55	36497	Macine House Girts
56	36498	Macine House Girts
57	36499	Machine House Crane Beams & Posts
58	36500	Miscellaenous Laterals
59	36501	Main Crane Runway Beams
60	36502	Sheave Support @ L8
61	36503	Crane Rails, Clips, & Splce Plates
62	36504	Macine House Wall Plates
63	36505	Macine House Wall Plates
64	36507	Macine House Purlins & Door Frames
65	36506	Machine House Floor Beams
66	36508	Struts in sheave support @ L22

67	36509	Nameplate

American Bridge Company		
Construction Drawings		
Elevator, Stairs, Railing		
Contract H2224/H2234		
ca. 1939		
Sheet #	PW #	Title
E1	36594	Erection Diagram (Elevator Shaft)
E3	36596	Erection Diagram (Bottom Chord)
E4	36597	Erection Diagram (Bottom Chord)
E5	36598	Erection Diagram (Bottom Chord)
A2	36587	Elevator Tower Section
1	36535	Elevator Tower
2	36536	Elevator Tower
3	36537	Elevator Tower
4	36538	Elevator Tower
5	36539	Elevator Tower
6	36540-1	Elevator Tower
7	36540-2	Elevator Tower
101	36541	Tower Platform
102	36542-1	Tower Platform
106	36544	Stairs
107	36545	Stairs
151	36546	Hand Rail
152	36547	Hand Rail
153	36548	Hand Rail
202	36550	Platform (El. 239.94)
204	36555	Platform (El. 239.94)
207	36558	Stairs
208	36559	Stairs
209	36560	Stairs
210	36561	Platform Beams
211	36562	Platform Beams
212	36563	Platform

214	36565	Platform
215	36566	Ladders
251	36567	Hand Rail (Balcony)
252	36568	Hand Rail (Platform)
253	36569	Hand Rail (Platform)
254	36570	Hand Rail (Platform)
255	36571	Hand Rail (Platform)
256	36572	Hand Rail (Platform)
303	36575	Platform
305	36577	Platform
306	36578	Platform
307	36579	Platform
308	36580	Platform
309	36581	Platform
310	36582	Platform
311	36583	Platform
351	36584	Hand Rail
352	36585	Hand Rail
353	36586	Hand Rail

American Bridge Company		
Construction Drawings		
Mechanical House		
Contract H2228/H2238		
ca. 1939		
Sheet #	PW #	Title
E4	42885	Erection Diagram
1	36599	Windowns & Doors
2	36600	Roof
3	36601	Wood & Insulation
C10	36605	Concrete Notes

Heyl & Patterson		
Construction Drawings		
Mechanical & Electrical Systems		
Set R-2685		
ca. 1939		
Sheet #	PW #	Title
1	36236	DL & LL Stresses in Boom - 15 Ton Rev. Crane
2	36237	Longitudinal, Lateral, & Wind Loads in Boom - 15 Ton Rev Crane
3	36238	Tabulation of Stresses, In Boom - 15 Ton Rev. Crane
4	36239	Calculations of Stresses in Turntable, Etc - 15 Ton Rev. Crane
5	36240	Loads, Stress Diagrams, Bending Moment of Travel Base - 15 Ton Rev. Crane
6	36241	Calculations & Stresses for Rotating Drive - 15 Ton Rev. Crane
7	36242	Rope Loads & Trolley Calculations
8	36243	Main Hoist & Auxiliary Hoist Engine Calculations
9	36244	Calculations of Speeds & Stresses of Main Rotor Drives
10	36245	Calculations for sheave blocks & Equalizer, Etc
Set C-2685		
Sheet #		Title
3	36248	General Arrangement of 175 Ton & 50 Ton Trolleys
4	36249	General Arrangement of 175 Ton & 50 Ton Trolleys
5	36250	General Arrangement of Main Hoist Engine
6	36251	General Arrangement of 50 Ton Auxiliary Hoist Engine
8	36253	General Arrangmenent of 15 Ton Revolving Crane
9	36254	General Arrangement of Floor Plan for Main Engine House
10	36255	General Arrancement of 15 Ton Hoist Engine
11	36256	General Arrangement of Machine Floor, Spider & Spud Lock - 15 Ton Rev. Crane
12	36257	Layout of Travel Base - 15 Ton Revolving Crane
13	36258	Arrangement & Machine Details of Trucks & Drives, etc - 15 Ton Rev. Crane
14	36259	General Arrangement of Rail Clamp Engine
15	36260	General Arrangement of Slip Ring Device - 350 Ton Crane
16	36261	Arrangement of Main Operator's Cab - Spud Lock & Radius Indicator
17	36262	Arrangement of Trolley Radius Indicator Supports
18	36263	General Arrangement of 175 Ton Hook Blocks and 350 Ton Equalizer
19	36264	General Arrangement of 50 Ton Hook Block
21	36266	Arrangement of Equalizer Sheaves at Outer End of Boom
22	36267	Layout of Sheave & Buffer Supports at Rotation Center
23	36268	Details of Shafting Pins for 15T Trolleys
24	36269	Details of Rods, Pins, Buffers, Etc

25	36270	Details of Pins, Shafts, Etc
26	36271	Details of Trolley Frames and Sheave Supports
27	36272	Details of Drive and Sheave Supports
28	36273	Structural Details for 50 Ton Trolley
29	36274	Details of Gear Guards
30	36275	Details of 175 Ton Main Hoist Engine Base
31	36276	Details of Side and End Beams
32	36277	Details of Welded Steel Bearing Stands
33	36278	Welded Steel Drums and Forged Steel Shafts
34	36279	Details of Guards for 175 Ton Hoist Engines
35	36280	Detail of 50 Ton Aux Hoist Engine Base
36	36281	Details of Welded Steel Bearing Stands
37	36282	Welded Steel Drums and Forged Steel Shafts
38	36283	Details of Forging, Shafting, Etc
39	36284	Details of Structural Base for Main Rotating Drives
40	36285	Details of Gear Guards for Main Rotating Drives
41	36286	Calculations & Details of Spud Lock on Main Rotor
42	36287	Details of Sheave Supports
43	36288	Details of 15 Ton Hoist Engine Base
44	36289	Detail of Welded Steel Drum for 15 T Hoist Engine
45	36290	Details of Shafts & Pins in Boom Structure
46	36291	Details of Truck Frame & Gear Guard in 15 Ton Revolving Crane
47	36292	Arrangement & Details of Main Operator's Cab
48	36293	Arrangement & Details of Main Operator's Cab
49	36294	Arrangement & Details of Main Operator's Cab
50	36295	Details of Shafts, Pins, Gears for Trolley Radius Indicator
51	36296	Details of Drum Base & Gear Guards for Trolley Indicator
52	36297	Details of Sheave Supports for Trolley Radius Indicators Rope
53	36298	Detail of Sheave Supports for Trolley Radius Inducator Rope
54	36299	Details of Pins, Links, Clamp Shoes for Rail Clamps on 15 Ton Cranes
56	36301	15T Boom Details
57	36302	15T Boom Details
58	36303	Details of Mast and Bracing for 15T Crane
59	36304	Details of Back Stay Roof Strut and Bearing for 15T Crane
61	36306	Location & Arrangement of Electrical Equipment "Power"
62	36307	Location & Arrangement of Electrical Equipment "Lighting"
63	36308	Electrical Equipment "Power & Lighting" - 15 Ton Rev. Crane
64	36309	Arrangement of Conductor System - Trolley's "A", "B", and "C" & 15 Ton Rev. Crane
65	36310	Conduit & Wire Sizes
66	36311	Details of Resistor Rack Platform $ Telephone Enclosure & Cable Reel Supports

67	36312	Details of Trolley Wire Supports for 15 Tone Crane Collector System
68	36313	Location of Spud Lock Limit Switches - 15 Ton Revolving Crane
69	36314	Location Diagram For Trolley Limit Switches
70	36315	Arrangement and Details of Supports for Trolley Collector System
71	36316	Details of Strain Supports for 15T Crane and 25T Crane Trolley Collector Systems
72	36317	Details of Resistor Racks for Main Engine House
73	36318	Details of Conductor Angles
74	36319	General Arrangement Slip Ring Device - 15 Ton Revolving Crane
75	36320	Arrangement & Details of 15 Ton Rev. Crane Operator's Cab
76	36321	Arrangement & Details of 15 Ton Rev. Crane Operator's Cab
77	36322	Details of Base Shaft & Guards
78	36323	Arrangement & Details of Center Pin & Spud Lock - 15 Ton Rev. Crane
79	36324	Detail of Spider Frame, Rollers, Rods, Etc for 15T Crane
80	36325	Detail of Turntable Floor for 15T Crane
82	36327	Detail of Turntable Floor for 15T Crane
83	36328	Details of Roof and Side Plates for 15T Crane Engine House
84	36329	Details of Roof and Side Plates for 15T Crane Engine House
85	36330	Detail of Stair and ladders for 15T Crane
86	36331	Details of End Sills for Engine Base for 15 Ton Crane
87	36332	Detail of Main Beams & Misc Details in Travel Base for 15 T Crane
88	36333	Detail of Cross and Corner Beams and Misc Details for 15T Crane
89	36334	Detail of Center Casting and Bracing for 15T Crane
90	36335	Detail of Drive Support & Hangers & Ladders for 15T Crane
91	36336	Detail of Walks Travel Spud Lock & Collector Supports for 15T Crane
92	36337	Detauks of Handrailing & Posts
93	36338	Arrangement & Details of 15 Ton Hook Block
94	36339	Details of Slip Ring Housings
95	36340	Details of 175 Gross Ton Hook Block Housing & Pins
96	36341	Details of Equalizer Girder for 30 Ton Hooks
97	36342	Details of Hooks, Nuts, & Trunnions for 175T and 350T Hook Blocks
98	36343	Details of Slip Ring Housings
103	36346	Power And Controls
106	36347	General Drawing
110	36348	Cover Over Indicator Rope Drums
Set C-2686		
Sheet #	PW #	Title

1	35349	Conduit Diagram
2	36350	Conduit Diagram
3	36351	Main Disconnect Switches and Lighting Panels
6	36354	Power and Control
8	36356	Conduit Boxes
Set O		
Sheet #	PW #	Title
1832	36372	Main Rotor Drives
1833	36373	Trolleys
1834	36374	Bushings
1835	36375	Bushings
1836	36376	Bushings
1837	36377	Rotor Drive
1838	36378	Track Segments
1839	36379	Misc Machined Parts
1840	36380	Castings
1841	36381	Castings
1843	36382	Misc Cast Parts
1845	36383	Name Plate
1846	36384	Name Plate
Set D		
Sheet #	PW #	Title
1948	36358	50T Spur and Speed Reducer General Arrangement
1949	36359	175T Spur and Gear Speed Reducer General Arrangement
1950	36360	Main Rotate Drive Spur and Gear Speed Reducer General Arrangement
1951	36361	Speed Reducer Component Details
1952	36362	Speed Reducer Gear Housing
1953	36363	Speed Reducer Gear Housing
1954	36364	15T Cast Components
Set L		
Sheet #	PW #	Title
883	36365	Sheaves
884	36366	Gears
885	36367	Gears
886	36368	Sheaves
888	36369	Gears
890	36370	Sheaves

Westinghouse Electrical		
ca. 1939		
Sheet #	PW #	Title
685496	36697	Controller Wiring Diagram
4-A-6250	36706	Controller Wiring Diagram
4-A-6252	36707	Controller Wiring Diagram
4-A-6359	36717	Controller Wiring Diagram
4-A-6360	36718	Controller Wiring Diagram
4-A-6361	36719	Controller Wiring Diagram
4-A-6362	36720	Controller Wiring Diagram
4-A-6365	36723	Controller Wiring Diagram
4-A-6416	36724	Controller Wiring Diagram
4-A-6494	36725	Controller Wiring Diagram
4-A-6611	36726	Bus Bar Layout
4-A-6612	36727	15 Ton Control Panels Cross Connections
10-C-366	33729	Resistor B.O.M.'s

Heyl & Patterson		
6398-3		
ca. 1980		
Sheet #	PW #	Title
1103	51744	General Arrangement 50T Trolley
1108	51745	General Arrangement Main Operators Cab
1109	51746	Rope Diagram & Sections of Frames - Trolley Arrg't & Radius Indicator
1112	51747	General Arrangement Main Engine
1113	51753	General Arranement 25T Shaw-Box Crane
1114	51754	General Arrangement 25T Shaw-Box Crane
1278	51748	Details of Shafts, Pins, Gears, & Dials for Trolley Radius Indicator
1296	51749	Details of Operator's Cab for 350T Crane
1297	51756	General Arrangement & Details of Festoon System Tow Arms
1301	51820	Detail Removable Roof Section on Machine House - Crane #111
1311	51750	Det. Material for Foundation - Conduit Bases and Layout
1313	51751	Cover Over Indicator Rope Drums
1314	51757	Material for Bridge Crane Replacement Bushings
1315	51755	Maintenance Platform for Crane #112
1318	51752	Details of Magnetic Brake Covers for Trolley Brakes

1320	51758	Hoist Drum Gear Details
1321	51759	Trolley Drive Gear Details & Bridge Drive Gear Details
1322	51760	Details - Travel Drive Reducer Gears
1326	51761	General Arrangement Hoist Drive Gears and Bushing Details
1327	51762	General Arrangement Bridge Drive & Trolley Drive Gears
1328	51763	General Arrangement Travel Drive Reducer Gearns and Bushings
1329	51764	B.O.M. - Stay-Pax Lubricators for Axles on Trolley for 25T Crane
1330	51765	B.O.M. - Crane #112 Item #28
1331	51767	Detail - Bushings for Bridge Crane #112
1332	51766	B.O.M. - Crane #112 Rework
1334	51768	General Arrangement of Bridge Crane #112
1335	51769	General Arrangement and Detail for Hook Lock on 25T Hook
1416	51031	General Arrangement & Drawing List
1436	51051	350 Ton Crane Lighting Arrangement
1437	51052	350 Ton Crane Lighting Arrangement
1452	51770	Crane #112 Bridge Crane Plan & Elevation
1453	51771	Crane #110 Schematic Diagram
1454	51772	Crane #110 Schematic Diagram
1455	51773	Hoist & Man. Magnetics Scematics
1456	51774	Bridge & Trolley Schematics

Heyl & Patterson		
6398-3		
ca. 1982		
Sheet #	PW #	Title
2101	51776	General Arrangement, 15 T Crane
2102	51777	General Arrangement 15T Trolley
2103	51778	Details of 15T Trolley
2104	51779	Layout of 15T Travel Base
2105	51780	General Arrangement of 15T Hoist Engine
2201	51781	Detail of Bushings
2204	51782	Details of Shafts & Pins, 15T Crane
2205	51783	Details of Sheaves & Brake Wheels for 15T Crane
2206	51784	Details of Bushings for 15T Crane
2209	51785	General Arrangement of 15T Hook Block
2213	51807	Details of Drive Shaft and Misc Framing
2215	51786	Detail of Base Shaft for 15T Crane
2216	51787	Rollers and Sheaves

2217	51788	Bushings and Endrope Sockets
2218	51789	Center Pin and Spud Lock 15T Crane
2219	51790	Spider Frame, Rollers, Rods for 15T Crane
2220	51791	Truck Frames and Gear Guards
2221	51792	Misc Details
2222	51793	Ladders and Stairs
2223	51794	Detail of House for Slip Ring for 15T Crane
2228	51795	Details of Shafting, Forgings, and Castings
2229	51796	General Arrangement of Rail Clamp Engine
2230	51797	Details of Bearing House, Rail Clamp Counterweight
2231	51798	Detail of Bearings & Rope Guides for 15T Crane
2232	51799	Details of Pins, Links, Clamp Shoes for 15T Crane
2235	51800	General Arrangement of Travel Base
2240	51801	General Arrangement Drum Winch and Reducer
2241	51802	Details of Pinion Shafts, Gears, Bearing Covers
2242	51803	Details of Bearing Housins, Jornal Box Cap and Stand
2244	51804	Dummy Pedestals for 15T Crane
2245	51805	Jacking Brackets for Trucks
2246	51806	General Arrangement & Detail of Festoon System Support
2251	51808	Detail of Hoist Engine Base
2252	51809	Tacking Support for Machinery House 15T Crane
2253	51810	Item #6
2255	51811	B.O.M. Item #7 Addition 15T Crane
2256	51812	B.O.M. Item #5 Addition 15T Crane
2257	51813	General Arrangement and Detail of Hook Lock 15T Crane
2258	51814	Arr'gt & Detail of Reductor & Limit Switch Support of Hoist Engine
2259	51815	Details of Operator's Cab for 15T Crane
2260	51816	Gen. Arrg't & Details of Support & Tow Arm for Festoon System
2261	51817	Details of Rail Clamp Brake Cover
2262	51818	Details of Magnetic Brake Covers for Travel Brakes
2263	51819	Details of Festoon Support Stiffeners
2401	51821	General Arrangement
2402	51822	Manual Magnetic & Travel Controller Connection
2403	51823	Rotate & Hoist Controller Connections
2404	51824	Resistor Connections
2405	51825	Interconnections @ Gantry Level
2406	51826	iInterconnections @ Slip Ring
2407	51827	Interconnections @ Machine House Floor
2408	51828	Lighting Panel "D"
2409	51829	Overhead Console

2410	51830	Left & Right Consoles
2411	51831	Cab Junction Box
2412	51832	Festoon Junction Boxes
2413	51833	Arrangement of Festoon System
2414	51834	Arrangement of Electrical Equip @ Gantry
2415	51835	Arrangement of Electrical Equip @ Machine House
2416	51836	Arrangement of Electrical Equip in Operator's Cab
2417	51837	Conduit Arrangement @ Gantry
2418	51838	Conduit Arrangement @ Machine House & Cab
2419	51839	Arrangement of Lighting Equipment
2420	51840	Hoist @ Rotate Schematics
2421	51841	Travel Schematics

H & Erdal		
Repairs & Repaiting		
ca. 1976		
Sheet #	PW #	Title
1	39705	Elevator of Crane & General Notes
2	39706-1	Tower
2A	39706-2	Misc Structural Repairs
3	39707	Pinion & Tread Girders
4	39708	Walkways and Stairs @ Bottom Chord Level
5	39709	Detals at Bottom Chord Level
6	39710	Walkways & Stairs @ Trolley Beam level
7	39711	Details @ Trolley Beam Level
8	39712	Walkways & Roof @ Top Chord Level
9	39713	Traveling Jib Crane

Heyl & Patterson		
6621-3		
ca. 1994		
Sheet #	CED #	Title
0101	72285-1	Line Diagram of Bridge
0102	72285-2	General Arrangement Btm Chord
0103	72286	General Arrangement Btm Chord
0104	72287	General Arrangement Top Chord Struts
0105	72288	General Arrangement of Hangers
0106	72289	General Arrangement Top Chord Walkway
0107	72290	General Arrangement Top Chord Walkway

0108	72291	General Arrangement Top Chord Walkway
0109	72292	General Arrangement Trolley Walkway
0110	72293	General Arrangement Trolley Walkway
0111	72294	General Arrangement Trolley Walkway
0112	72295	General Arrangement Trolley Walkway
0201	72296	Detail - Misc Steel @ Panel L22
0202	72297	Detail - Misc Steel
0203	72298	Detail - Misc Steel
0204	72299	Detail - Misc Steel
0205	72300-1	Detail - Misc Steel
0206	72301	Detail - Misc Steel
0207	72300-2	Detail - Misc Steel
0209	72302	Detail - Misc Steel
0210	72303	Detail - Misc Steel
0211	72304	Detail - Misc Material
0212	72305	Detail - Misc Steel
0214	72306	Detail - Misc Steel
0223	72307	Btm Chord Weld Maps

US Navy	
ca. 1978-1979	
Miscellaneous Internal Repairs	
PW#	Title
43304	Misc Structural Repairs
43564	Installation of Hinges and Latches on Rectifier
43658	FDNS for A, B, & C Trolley Brakes
43666B	Minor Modification Rectifier Fuse & Regenerative Circuit
43863	FDN for Backup Motor Generator Set
43864	Backup Motor Generator General Arrangement
44233	Enclosure for Motor Generator Set
44234	Enclosure for Motor Generator Set
45222	Pre-engineered Metal Bldging - Structural
45615	Pre-engineered Metal Bldging - Electrical
45642	Pre-engineered Metal Bldging - Electrical Notes
47111	Installation of Manual Transfer Switch
47112	Installation of Manual Transfer Switch - Notes
47455	Pre-engineered Metal Bldging - Structural
47456	Pre-engineered Metal Bldging - Electrical Notes

Miscellaneous Drawings	
PW#	Title
13335	Rigging Equipment Heavy Shackles & Hooks
13336	Rigging Equipment Shackles
13346	Rigging Equipment Support for Equalizer
23220	Clearance Diagram
31223	Repairs to Pinion Girder
34030	Replacement of Machinery Room Windows
36683	1 1/2 Sq Insulating Sleeve (Tubing) Bakeilized Fibre
36684	50,000# Crane Name Plate
36685	Name Plate
36686	Clearance Diagram 25T Crane
36687	Wiring Diagram Controllers
36688	Thrust Bearing For Crane Hook
36689	Thrust Bearing For Crane Hook
36690	Thrust Bearing For Crane Hook
36691	Thrust Bearing For Crane Hook
36692	Holorib Roof Layout
36693	3T Twin Hook High Speed
36694	Louvres
36695	Elevator Door
36696	Elevator
36698	Floodlights
39520	Installation of Access Ldder on C Block Carriage
39698	Communication System
41146	Passenger Elevator Overhaul
47279	Assembly Layout 12' Core
47280	Outline Drawing
47281	Wiring Diagram for Weatherproof Control Cabinet
47282	Weatherproof Control Cabinet
58547	Lifting of Diving Boat
60502	Freplacement of Fault Board with Relays
69796	Rotate Output Coupling Spacer for Fauk Coupling

15-2
List of Documents Other Than Drawings and Sketches

Table 15-2
Folder and File Naming pdf / Structure
Docments Other Than Drawings and Sketches

Elctronic Folder Name		Electronic File Name		Contents
HH 110 Docs				
		Elec Maint		Blue 3 ring binder with Heyl & Patterson printed in white, Electrical Maint parts and instructions
		Vendor Data		Three Ring Binder with "78" on the inside cover sheet
		WestHousePrts		Light Blue Acco-Bound Report Cover, Westinghouse Renewal Parts List
		HH110 Index		White 3 ring binder with drawing index, small notes with drawings not indexed, envelopes with sketeches
		HPletter8Dec99		Clear Cover Acco fastened letter with three tabs
HH 110 111 Docs		HP Lead Paint		Stapled and 3 hole punched test results contract # N62472-94D-1482, no binder, lab cover letter dated 10 Apr 96
		HPInsRptNov99		Black Legal size H&P Inspection Report, Exhibit 7, November 99
		Nov99ColorCod		Black Legal size H&P Inspection Report, Exhibit 7, November 99, Color Coded by hand
		Second Copy		same as 2-1 except last page missing, No Scan Required
		Jan82Equip Pwr		Details of Power, Limit Switches, Equipment fittings
HH 111 Docs1982				
		78 ContPwrLub		Maufactuer's Data for controls, switches, power, lubrication points Earliest date is 1978

Elctronic Folder Name		Electronic File Name		Contents
		82 Ops CutShts		Safety Instructions, Operations Instructions, Wiring Diagrams, Manufacturers data for Elec Panels, Resistors, Brakes, Contactors, Festooning, Limit Switches, Disconnects, Master Switch, Relays,
HH 112 Docs1982		82OpsCutShts		Safety Instructions, Operations Instructions, Wiring Diagrams, Manufacturers data for Elec Panels, Instruments listed but data missing, Power Reels, Resistors, Brakes, Contactors, Festooning, Limit Switches, Disconnects, Master Switch, Relays, HP Drawing 6
Box number 2				
HH 110 Mods				
		Mods72 to 92		Accepted Modifications Feb 72 through 26 Jun 92
		Mods92 to 07		Accepted Modifications Oct 92 through Nov 07
		1Corrsp History		May 86 through Jul 2001
		2Corrsp History		Sep 70 through Aug 97
		3Corrsp Gen		Oct 93 through Dec 94, Funding, Critical Scheduling, Crane Center Standards and Review or repairs, Steel, Paint, Welding
HH110 MGS				
		1Blnk Forms		Rectifier Unit Blank Forms
		2Blnk Forms		Rectifier Unit Blank Forms
		3Blnk Forms		Rectifier Unit Blank Forms

Elctronic Folder Name		Electronic File Name		Contents
		VX-22 Index		Index of Motor Generator Set and Rectifier Monthly Quarterly and Annual Inspections / Tests Jun 85 - Jun 92, actual results no included; includes Power Supplies for HH 110 on Nuclear Power Manual, NavSHIPYDNORINST 9210.2
		MGS SRO		Motor Generator Set Shop Repair Orders 1988 - 1991
HH 110 CTR				
		CTR with SRO89		Crane Trouble Reports with Shop Repair Orders 1989, PWD code 424
		CTRwithSRO90		Crane Trouble Reports with Shop Repair Orders 1990, PWD code 424
		CTRwithSRO91		Crane Trouble Reports with Shop Repair Orders 1991, PWD code 424
HH 110 PM Docs				
		1 InspRepts		Inspection Reports from Mar 94 - May 98 on forms NNsy11262/25 (Rev 11-76) then Certification of Load Test and Condition Reports, Deferred Worksheet included
		2InspRepts		Inspection Reports from Jun98 - Aug 2000 on forms Maintenance Inspection Specification and Recordthen Certification of Load Test and Condition Reports, Deferred Worksheet included
HH 110 LHWI				
		1LftHndlgWrkIn		Mix of Shop Repair Orders undated, Lifting& Handling Work Instruction from Jan 07 through May 01

Elctronic Folder Name		Electronic File Name		Contents
		1CrnOprEnvel		Stability Analysis, Batten Plate Repairs, Bird Control Methods, and Reset Camera on Crane, 2000 - 2002
		LayUpInspec		Removal of Crane from Special Purpose Service (SPS) 22 May03, Crane Condition Inspection Reports Aug 07 with Lay Up Inspection Report of 11 May 2012
		2LftHndlgWrkIn		IHWI forms Jan 08 and Nov 07 for DC Power supply test and Re-lamp Re-lense Aircraft Warning Lights
		2CrnOprEnvel		Cover sheet only, Control of Crane Operating Envelop, 15 Feb 02
HH110 MinMaint				
		MinMaintFeb11		Fall Protection Plan dated 10Apr 12, Lifting and Handling Admin Procedure 7Feb11 Minimize maintenance to only that required for structural, electrical safety and mechanical integrity
HH 110 PrevAccpt				
		CondnsAcceptd		List of conditions accepted from 28Jul89 through 05Jul00. Crane Trouble Reports for same period. Crane Work Inspections for same period
HH 110 LWHI				
		Rectfrs Lube		Lifting and Handling Work Instructions from 10 Jul 03 through 20 Dec 10. Primarily Lubrications and work on Rectifiers

Elctronic Folder Name		Electronic File Name		Contents
		HndRls Lube		Two LHWI's from 2010. One for "No Access" sign because of faulty handrails, one for Lubrication
HH 110 Accidents				
		Accdnt Reports		Accident reports 29 Jun 84 - 07Feb2002.
		B W Photos		Dept of Navy envelop with several crossed out hand annotated labels and one legible label, "PICTURES HH 110". Twelve black and white photos; no dates, no labels
HH 110 Lube				
		Lube 01 to 04		Lubrication Schedules / Performance from 15 Feb 01 - 14 Dec 04
		Lube05 to 06		Lubrication Schedules / Performance from 26 Oct 05 - 13Mar06
		15Aug06Lab		Gear Oils particle report from Mid-Atlantic Regional Materials Testing Lab, Code 134, Bldg 184 NNSY
HH 110 CWI				CWI is Crane Work Instruction
		CWJun92Mar94		Crane Work Instructions from Jun 1992 - Mar 94
		CWMar94Sep97		Crane Work Instructions from 25 Mar 94 - 02Sep97
		CWFeb95Jan98		Crane Work Instructions from 12Feb95 - 20Jan98
		CWJan98Apr00		Crane Work Instructions from 20Jan98 - 19Apr00
		CWApr00Sep01		CWI 19Apr00-13Sep01
		CWMar00No01		CWI 25Apr00-29Nov01
HH 110 PWEDA				PWEDA is Public Works Division Engineering Authorization
		1PWEDA		PWEDA 27Mar71-02Nov72

Elctronic Folder Name		Electronic File Name		Contents
		2PWEDA		PWEDA27May75-07Apr77, PWEDA Change Revision Log 16 Mar 77 - 08Apr77, Standard Crane Engineering Instructions, Inspection of Hoist Drums, QA dates 21 Oct 94-26Nov97
HH 110 CEI				CEI is Crane Engineering Instruction
		CENov92Jul01		CEI 28Nov92 - 09Jul01 Basic Operation Instructions, Lists of Safety Devices, and list of Operational Aids
HH 110 RVLR				RVLR is Reactor Vessel Lift Rig and related topics
		1RVLR		NO FORN Correspondence and Production Engineering Authorization Forms 06 May 84 through 29 May 96 regarding certification of A4W RVLR, Blank Forms for Certification of A4W Reactor Vessel Lift Rig, Loose photo copies of notes from drawings
		2RLVR		NO FORN Production Engineering Authroization Form dated 23 Nov 92 regarding testing and certification of A4W RVLR
HH 111 InspctRept				
		JMMar94May99		Job Material Lists 01Mar94-07May99, Sheet metal, lexan, heater strips, static timer, wheel and bearing for Festoon, Limit Switch, Misc steel plate, screws and hardware
		CAR07Mar02		Crane Alteration Request - fabricate some Festoon parts not readily available.
		Lube Sched		Lubrication Schedule / Performance 31 Jan 94 - 02Dec94

Elctronic Folder Name		Electronic File Name		Contents
		CIRNv93May95		Crane Inspection Reports with Specifications, Quality Assurance Checklists, Wire Rope Inspections, Category I Maint. Inspect. Reports, 09Nov93 - 16 May 95
		CITS24 May06		Crane Inactivation Task Sheet, 24 May06, Work Description matrix sheets to various office codes 15 Nov 93 - 02Apr04
HH 111 Festoon				
		FSOct97Mar02		Festoon Cut Sheets from 21 Oct 97 and Crane Work Instructons to 07Mar02 regarding Festoon system, Festoon truck wheels, bearings and cables.
HH 111 CWI				CWI is Crane Work Instruction
		CWMar92Nv93		CWIs from 11 Mar92 - 28Oct93. They include replace copper-carbon motor brushes, gear box realignment, replace shorted wires in rusted conduit…repair and repaint structural steel at spider.
		CWApr93May08		Handrail repair, clean prime and paint steel structure, brake realignment, brake resevoir inspection, motion restrictions due to detriorated bottom chords on boom - See CWI 14 Sep94 #N42863, lubrication, electrical shorts repaired and related work.

Elctronic Folder Name		Electronic File Name		Contents
		CWNv93May95		Crane Work Instructions with attached bills of materials, inspection reports and material sheets including; repair rail clamp - replace rivets with bolts, clean center pin of spider and provide pigeon protection, clean contactors and shields, replace corroded conduit that is damaging wire, clean resistors, brake inspections and replace warning signs - voltage.
		CWNv97Mar00		CWIs 17Nov97 - 17 Mar 00 in folder labelled Electrical Reinspection including clean travelling motors re-lubricate, cover festoon with new tarp, anemometer labels wiring and related, rail dog pin realignment for limit switch to work, clean hoist panel contactors, heater strips, replace EAS in hoist panel speed control with in line timers, and realated work.
		CW 2000 plus2		CWIs and Standard Crane Engineering Insructions 21Jul 00 - 02 Aug 00 in file labelled Mechanical Reinspection. Also includes what appear to be misfiled copies of C WIs from 1997, all related to repair and replace machine house deck, weatherstriping and sealants on machine house, Main Hoist Brake Shoe Inspection, Rail Clamp Brake shoe replacement, Main Hoist coupling alignment, rotate motor brake inspection and repairs to frozen hydraulic acutators

Elctronic Folder Name		Electronic File Name		Contents
HH 111 Corrspnd				
		CorspSPStoGPS		12 Dec 91 Request for HH 111 to be removed from Special Purpose Service to General Purpose Service - no response found
		ValSPS Sep90		06Sep90 Atlantic Division of Naval Facilities Engineering Command validated Norfolk Naval Shipyard certification of HH 111 for Special Purpose Service. Some attachments are NOFORN
HH 111 SRO				SROs are Shop Repair Orders
				[SROs with some with Material Sheets] 06 Jul 87 - 15Jun92 including drain inspect clean re-fill main hoist transmission, clean inspect align main hoist brake, replace parts on limit switches, inspect and align travel brakes and rail clamp brakes
HH 111 Mods				
		CA AircraftLits		Crane Alteration Request 21 Nov 07 to replace old Aircraft Warning Lights
		CADailyInspect		CAR to delete safety interlocks from daily inspection and cover them in quarterly inspections with approval dated 26 Jun 1992
		CAforDeadMan		CAR to add dead man function to remote rotate controller with approval dated 15 Nov 89.
HH 111 Anl Cert				Anl Cert is Annual Certification
		Cat1InsAnlCert		Category 1 Inspections Jul 90-Jun 93 with attachments, Annual Certifications Aug 90 - Aug 92,
HHH 111 CTR				CTR is Crane Trouble Reports

Elctronic Folder Name		Electronic File Name		Contents
		CTSep74Jun92		Crane Trouble Reports grouped by those completed before Sep 82, those completed before Aug 83 and a series of requests for deadman switches, as well as normal replacement of worn or shorted out electrical equipment, slack cable detector added, correct miscommunications about Special Purpose Service, main hoist brakes found adequate
HHH 111 CEI				CRANE Engineering Instruction
		CEI01Jul92		Instructions to post updated Operating Instructions and List of Safety Devices
HHH 111 LHWI				LHWI is Lifting & Handling Work Instructions
		LHAug00Mar11		A mixture of Crane Work Instructions and LHWIs 11 Aug 00 - 29Mar11; including duplicate CWIs from other folders, painting, repair rain guards, repair/replace rail clamp housings, new dry chemical fire extinguishers, temporary measures to prevent injury or damage during repairs, and related work.
		LHAug97Dec03		A mixture of CWIs and LHWIs 2?Aug97 - 11Dec03 including: missing electrical contactor shims, new operator spot lights at cab, festoon overhaul, repeat of fire extinguisher replacement, repeat of new tarp around festoon to prevent worn wheel from falling to ground, lubrication, unwind and rewind incorrectly installed wire rope, coupling alignments, and related work.

Elctronic Folder Name		Electronic File Name		Contents
HH 111 PWEDA				PWEDA is Public Works Engineering Division Authorization
		PWMar75Oct92		PWEDAs with one Crane Engineering Instructions, 10Mar75 - 28Oct92 including: repair dead man motor, laboratory report on cast iron, strobe lights, correct dead man system functions, post upt to date Operating Instructions and List of Safety or Warning Devices, Y2K Compliance Letter, and related work.
HH 111 Loose				
		1HH 111 Loose		Color photos in clear plastic covers bound by acco fasteners, marked US Navy Photograph, For Official Use Only including view from crane, crane itself, corroded steel, what looks like truck for HH 111
		2HH 111 Loose		Color photos printed on copier paper in blue paper report cover with edge binder including: crane, view from crane, partial cab interior, indicator dials, hoist drums, main boom with C hook, corroded metal, pigeon debris, and related items all marked US Navy Photograph, For Official Use Only

Elctronic Folder Name		Electronic File Name		Contents
		3HH 111 Loose		Copies of correspondence in other folders related to timing of crane repairs and needed use for ships, a two page 21 Apr 94 typed paper with basic reach capability and reasons to continue maintenance, a one page typed paper headed Problems Encountered / Permanent Corrective Action NOFORN regarding suspension of load due to open conductor in B block hoist controller, what appears to be a mis-filed letter regarding Stiffleg Derrick running repair order 10-117.
HH 112 Anl Cert				
		Annl Cert 112		Annual Certifications with attached inspection reports for 7 Nov 89 and 07 Dec 90 with 13 Apr 94 letter requesting crane 112 be placed on Inactive Crane List
		Indirect Supt		Indirectly Supporting Documents from HP letter of 02 Nov 82 regarding trolley test - Lifting & Handling Work Instruction 23 Feb 04 to take 112 out of service (identified as BC-117482); including one Crane Work Instruction to provide a support for chainfall (hoist)., and lubrication schedule 5 pages.
HH 112 Corresp				
		Y2K 09Mar99		Y2K Compliance and additional copy of letter to place 112 on Inactive Crane List
HHH 112 CWI				Crane Work Instructions
		CW 13 Apr 94		CWI Cancelled - clean wire rope; that is the only CWI filed separately

Elctronic Folder Name		Electronic File Name		Contents
HHH 112 SRO				Shop Repair Orders
		SRNov87Dec90		Index of SROs from 23 Nov87 - 07Dec90 and other documents including: 1986 SRO to replace wire at Trolley, 1988 SRO to disassemble, clean lubricate and reassemble Bridge brake and Main Hoist Holding brake, 1989 SRO for Bridge brake pins, as well as clean, sandblast paint load hook and nut.
HHH 112 CTR				Crane Trouble Report
		CTSep74Oct90		CTRS from 10 Sep 74 - 02Oct90 including: request for crane capacity rating, tighten loose bolts on bridge drive shaft, failure of trolley to move under 125% load (see 27-2), lubrication and lubricant,
HH 112 PWEDA				Public Works Engineering Division Authorization
		PWOct72Sep82		PWEDAs 17 Oct 72 - 27 Sep 82 (one out of chronological order) including: issue Standard Procedure for Inspecting Blocks/Swivels, Technical Instructions for Inspecting Wire Rope , Fittings, Connections, and Terminal Hardware on all cranes, issue Basic Operating Instructions and List of Safety Devices
Empty Folders				No Scan Required
				HH-110 CWI #7
				HH-110 CWI #8
				HH-110 CWI #9

Elctronic Folder Name		Electronic File Name		Contents
				HH-110 CWI #10
				HH 111 Accident
				HH 112 Modifications (BC-117482)
				HH 112 Accidents (BC117482